Replacement Parts And Service Information

Spare Parts

It is suggested that the following spare parts be ordered and kept on hand:

Qty.	Ref. No.	Part Number	Description
1	2880-15	78-8057-6179-4	Roller - Applying
1	2881-5	78-8057-6178-6	Roller - Buffing
1	2881-10	78-8070-1274-1	Spring - Upper Extension
1	2883-2	78-8017-9173-8	Blade - 2.56 Inch/65 mm
2	2883-12	78-8052-6602-6	Spring - Cutter
1	2886-10	78-8070-1273-3	Spring - Lower Extension
2	2812-38	78-8070-1531-4	Belt - Drive W/Hook

The threading tool, part number 78-8017-9433-6, is also available as a replacement stock item. Refer to **"How To Order Replacement Parts"** for ordering information.

How To Order Replacement Parts

1. Order parts by part number, part name, machine name, type number and part quantity required. A parts order form is provided at the back of the manual.

Minimum billing on parts orders will be $10.00.
Replacement part prices available on request.

2. Replacement parts and part prices available direct from:

3M Tape Dispenser Parts
241 Venture Drive
Amery, WI 54001-1325

Note - Outside the U.S. contact the local 3M subsidiary for parts order information.

Repair Service

Refer to the front of this instruction manual "Service Instructions", for information on repair service.

Options/Accessories

For additional information on the options/accessories listed below, contact your 3M Representative.

Part Number	Option/Accessory
78-8052-6553-1	Box Hold Down Attachment, Model 18500 (used in conjunction with conveyor extension attachment below)
78-8060-7405-6	Caster Kit Attachment
78-8069-3924-1	Conveyor Extension Attachment
78-8079-5505-5	Three Flap Folder Kit

Replacement Parts - Illustrations and Parts Lists
100a Adjustable Case Sealer, Type 19200
Frame Assemblies

1. Refer to **Frame Assemblies** figure to find all the parts illustrations identified by **figure numbers.**

2. Refer to the figure or figures to determine the **individual parts** required and the **parts reference number.**

3. The **replacement parts list,** that follows each illustration, includes the **part number** and **part description** for the parts in that illustration.

> **Note** - The complete description has been included for **standard fasteners** and **some commercially available components.** This has been done to allow obtaining these standard parts locally, should the customer elect to do so.

4. Refer to page 33 - **"Replacement Parts and Service Information"** of this manual for replacement parts ordering information.

100a Frame Assembly

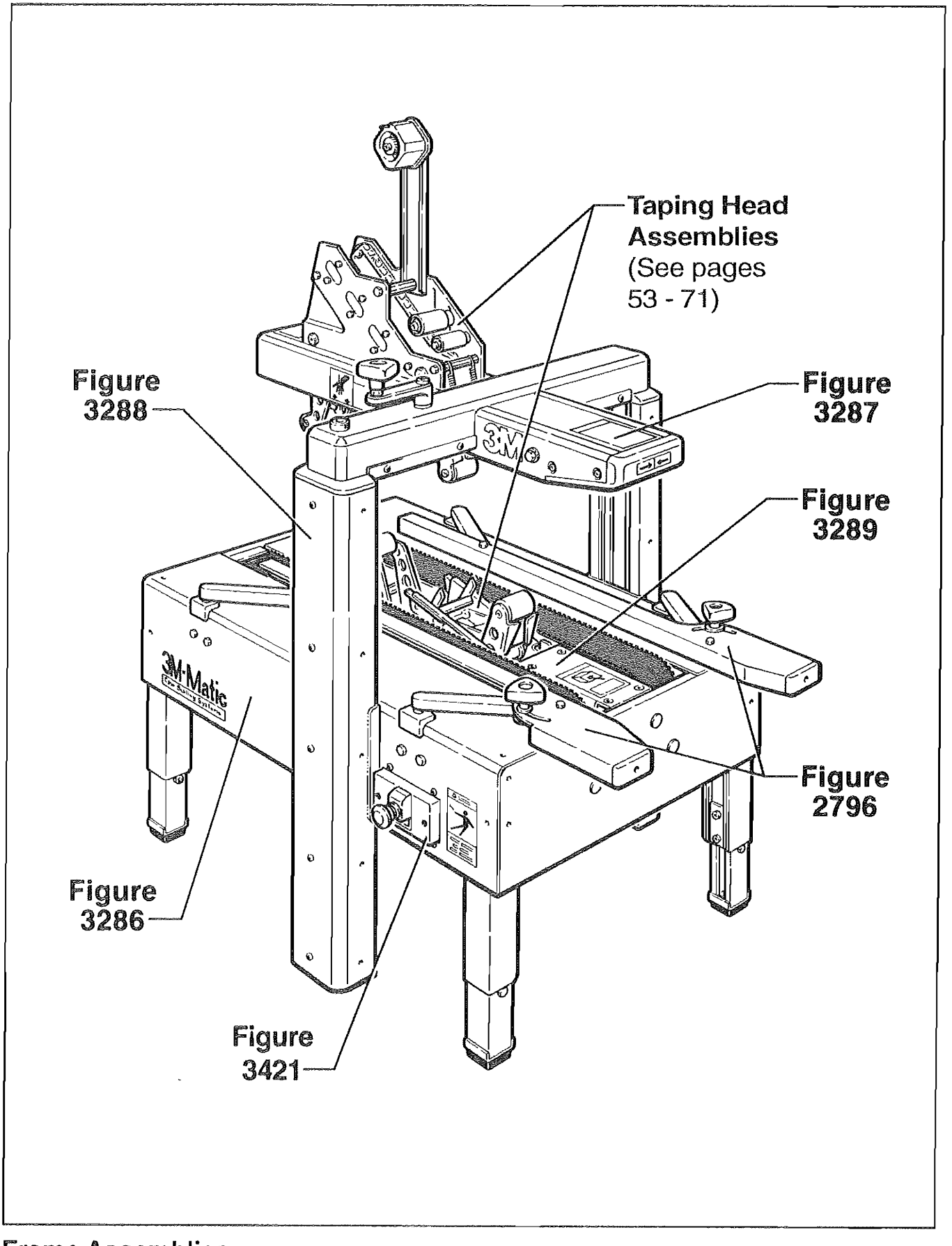

Frame Assemblies

100a Frame Assembly

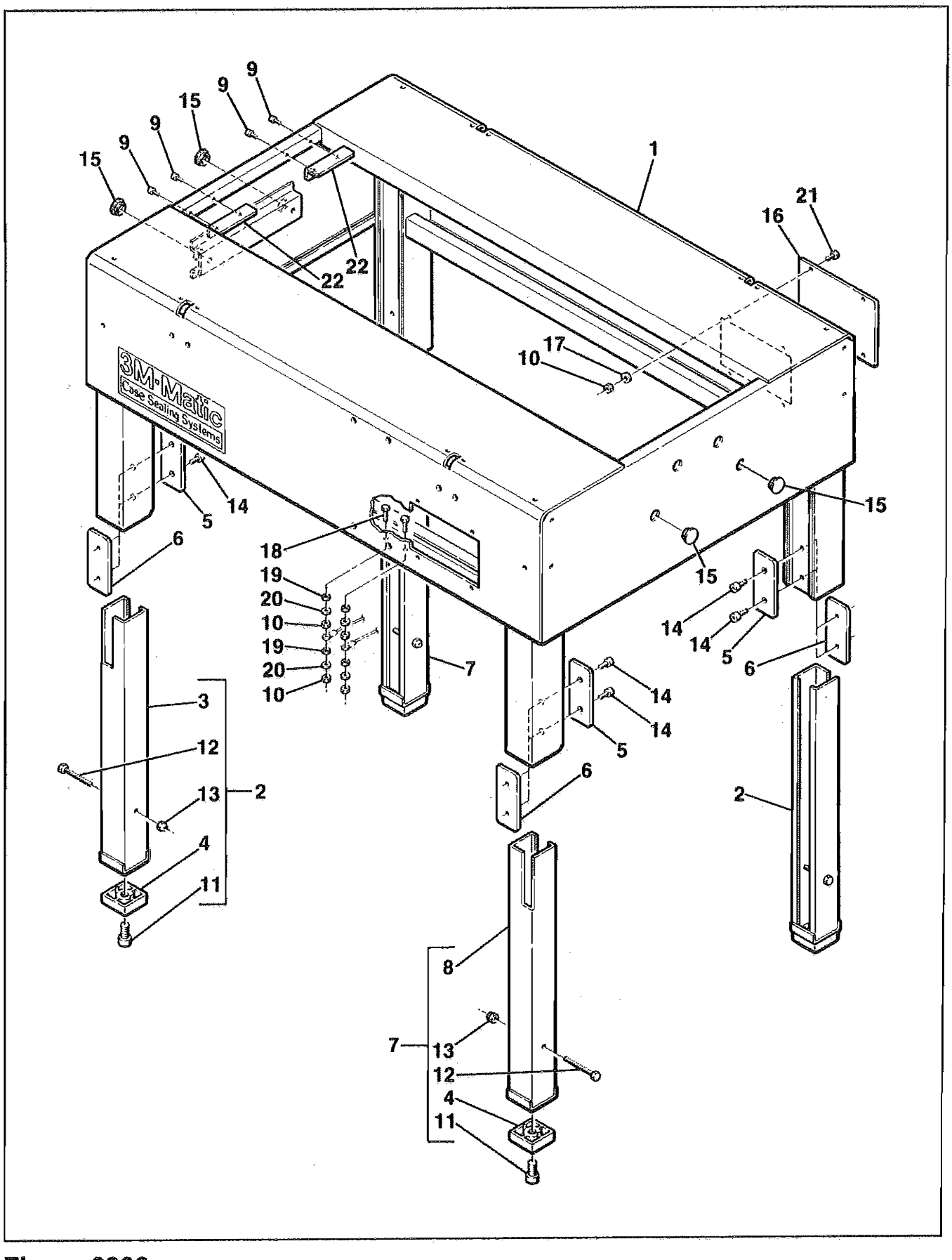

Figure 3286

Figure 3286

Ref. No.	3M Part No.	Description
3286-1	78-8079-5119-5	Bed – Conveyor
3286-2	78-8079-5120-3	Leg Assembly – Inner R/H
3286-3	78-8079-5121-1	Leg – Inner R/H
3286-4	78-8079-5122-9	Pad – Foot
3286-5	78-8079-5124-5	Clamp – Leg
3286-6	78-8079-5125-2	Clamp – Leg
3286-7	78-8079-5126-0	Leg Assembly – Inner L/H
3286-8	78-8079-5127-8	Leg – Inner L/H
3286-9	26-1003-7948-1	Screw – Soc Hd, Hex Soc, M5 x 10
3286-10	78-8010-7417-6	Nut – Hex M5
3286-11	26-1003-7985-3	Screw – Soc Hd, Hex Soc, M12 x 20
3286-12	26-1005-5318-4	Screw – Soc Hd, Hex Soc, M6 x 55
3286-13	26-1003-6916-9	Nut – Plastic Insert, M6
3286-14	26-1003-7963-0	Screw – Soc Hd, Hex Soc, M8 x 16
3286-15	78-8054-8821-6	Cap
3286-16	78-8060-8487-3	Cover – Switch
3286-17	78-8005-5741-1	Washer – Plain, M5
3286-18	78-8060-8488-1	Screw – Hex Hd, M5 x 20
3286-19	78-8046-8217-3	Washer – Special Lock
3286-20	78-8005-5741-1	Washer – Plain, M5
3286-21	78-8060-8087-1	Screw – Pan Hd, M5 x 10
3286-22	78-8060-8482-4	Plate – Protection

100a Frame Assembly

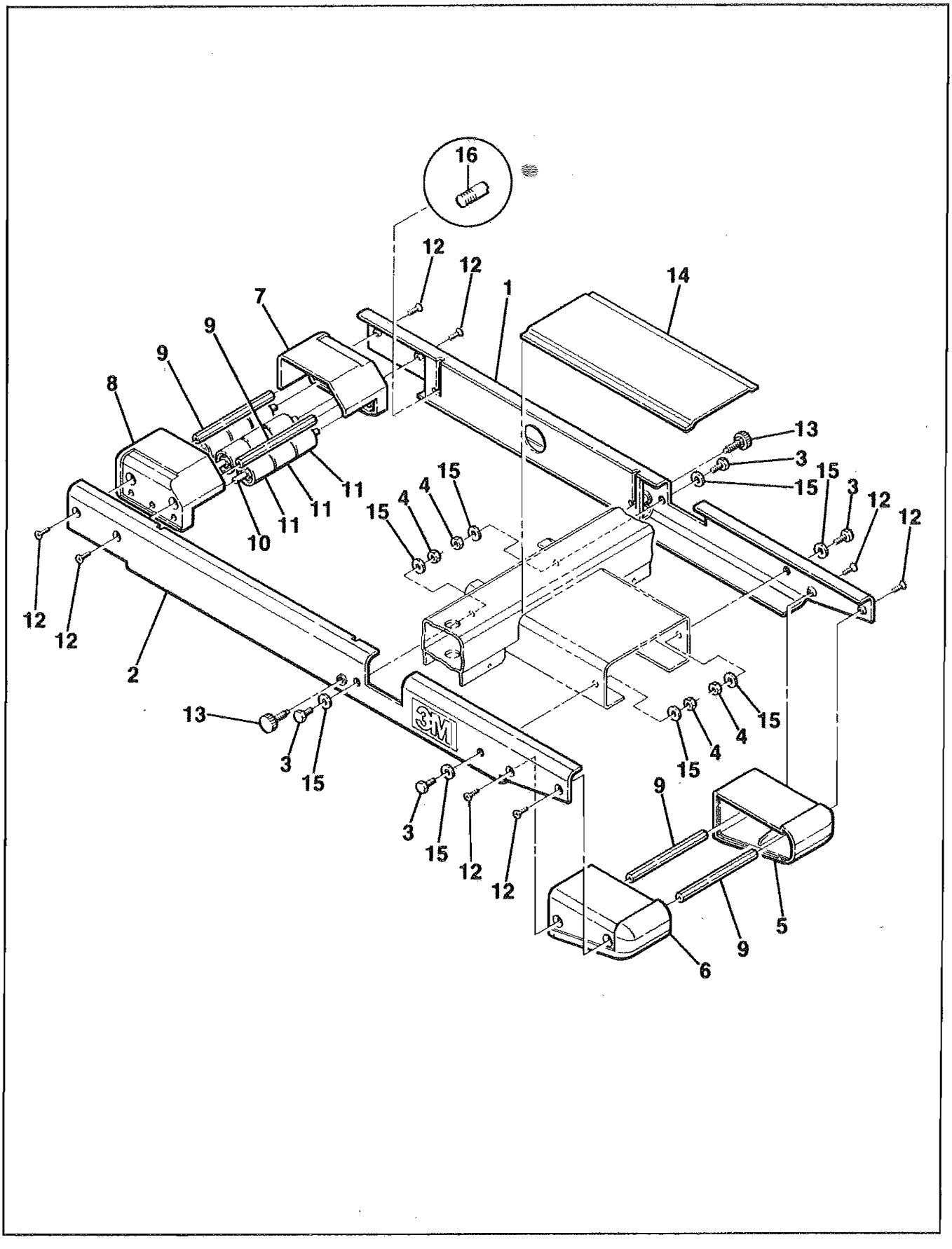

Figure 3287

Figure 3287

Ref. No.	3M Part No.	Description
3287-1	78-8079-5174-0	Side Plate – R/H
3287-2	78-8079-5175-7	Side Plate – L/H
3287-3	26-1003-5842-8	Screw – Hex Hd, M8 x 20
3287-4	26-1000-1347-8	Nut – Hex M8
3287-5	78-8070-1574-4	Slide – Front, Right
3287-6	78-8070-1575-1	Slide – Front, Left
3287-7	78-8070-1576-9	Slide – Rear, Right
3287-8	78-8070-1577-7	Slide – Rear, Left
3287-9	78-8070-1553-8	Spacer
3287-10	78-8070-1554-6	Stud
3287-11	78-8060-7693-7	Roller – 32 x 38
3287-12	26-1005-5316-8	Screw – Flat Hd, Hex Dr, M5 x 16
3287-13	78-8070-1555-3	Block – Upper Head
3287-14	78-8079-5176-5	Cover
3287-15	78-8017-9318-9	Washer – Plain, M8
3287-16	78-8076-4500-3	Stud – Mounting

100a Frame Assembly

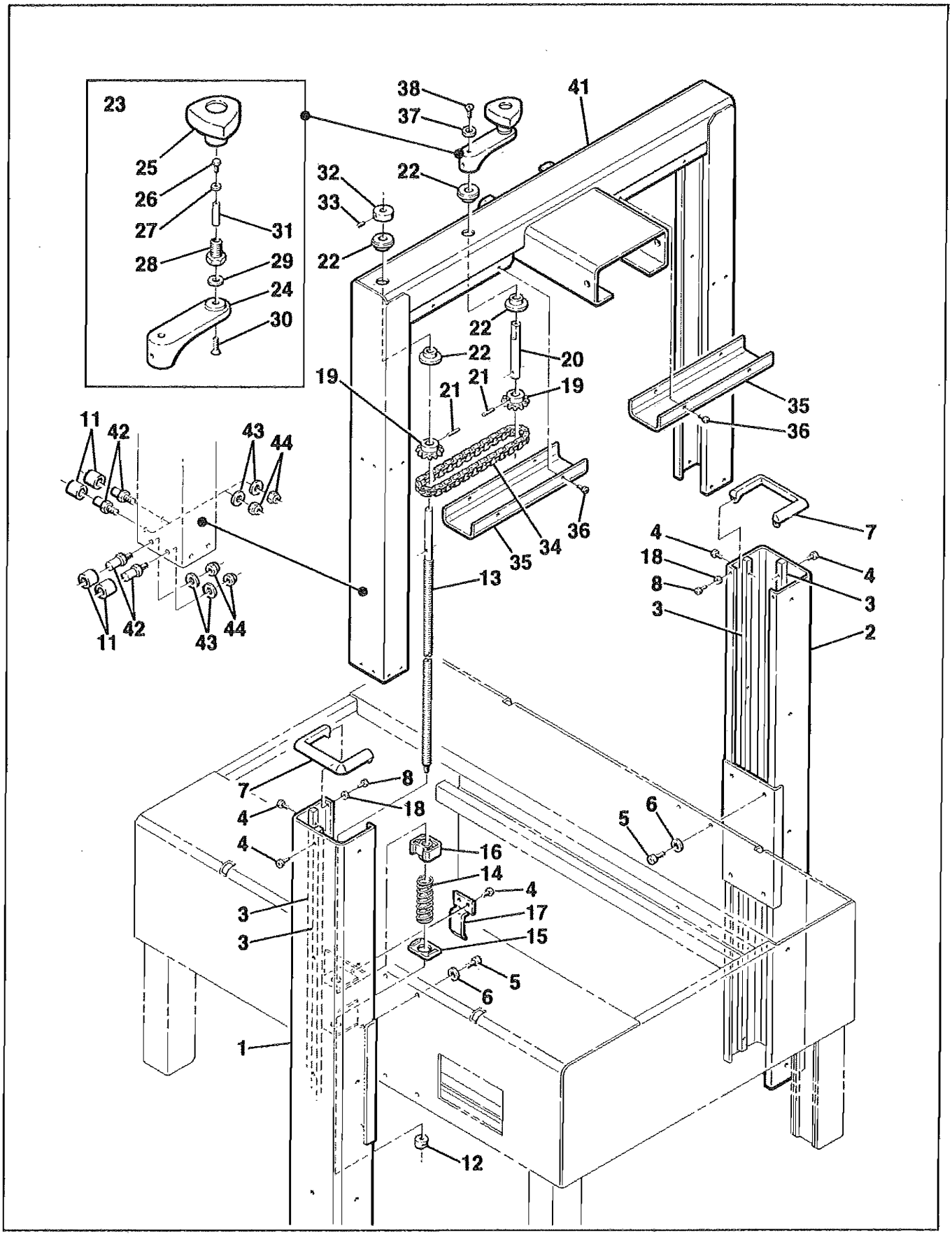

Figure 3288

Figure 3288

Ref. No.	3M Part No.	Description
3288-1	78-8079-5132-8	Column Assembly – Outer L/H
3288-2	78-8079-5133-6	Column Assembly – Outer Column R/H
3288-3	78-8079-5134-4	Guide – Outer Column
3288-4	78-8060-8087-1	Screw – M5 x 10, Metric
3288-5	78-8023-2301-0	Screw – Hex Soc Hd M8 x 10
3288-6	78-8005-5736-1	Lockwasher – For M8 Screw
3288-7	78-8079-5135-1	Cap – Column
3288-8	26-1002-4955-1	Screw – 8P x 13 Self-Tap
3288-11	78-8076-5481-5	Roller – Column
3288-12	78-8054-8968-5	Nut – Special
3288-13	78-8079-5139-3	Lead Screw
3288-14	78-8054-8969-3	Spring
3288-15	78-8054-8970-1	Bed Plate For Spring
3288-16	78-8054-8571-7	Nut – Plastic
3288-17	78-8076-5482-3	Plate – Nut Stop
3288-18	78-8005-5740-3	Washer – Plain 4 mm
3288-19	78-8079-5140-1	Sprocket – Screw, 3/8
3288-20	78-8079-5141-9	Shaft – Crank
3288-21	78-8079-5142-7	Spring Pin – 4 x 26 Collar
3288-22	78-8079-5168-2	Collar
3288-23	78-8076-4807-2	Crank Assembly
3288-24	78-8076-5422-9	Crank
3288-25	78-8070-1512-4	Knob – VTR-B-M12
3288-26	78-8010-7157-8	Screw – Hex Hd, M4 x 10
3288-27	78-8005-5740-3	Washer – Plain 4 mm
3288-28	78-8070-1511-6	Bushing
3288-29	78-8070-1510-8	Washer – Nylon 7 x 15 x 1
3288-30	26-1005-5316-8	Screw – Flat Hd, Hex Dr, M5 x 16
3288-31	78-8070-1509-0	Shaft – Crank
3288-32	78-8070-1538-9	Bushing
3288-33	78-8091-0354-8	Screw – Set, M5 x 6
3288-34	78-8060-8020-2	Chain – 3/8 Inch Pitch, L=50
3288-35	78-8079-5144-3	Cover – Chain
3288-36	26-1002-5753-9	Screw – Self-Tapping
3288-37	78-8076-4809-8	Washer – Crank
3288-38	78-8032-0375-7	Screw – Hex Hd M6 x 16
3288-41	78-8091-0325-8	Column Assembly – Inner
3288-42	78-8091-0324-1	Screw – Special
3288-43	26-1000-0010-3	Washer – Flat M6
3288-44	26-1003-6916-9	Nut – Locking Plastic Insert M6

100a Frame Assembly

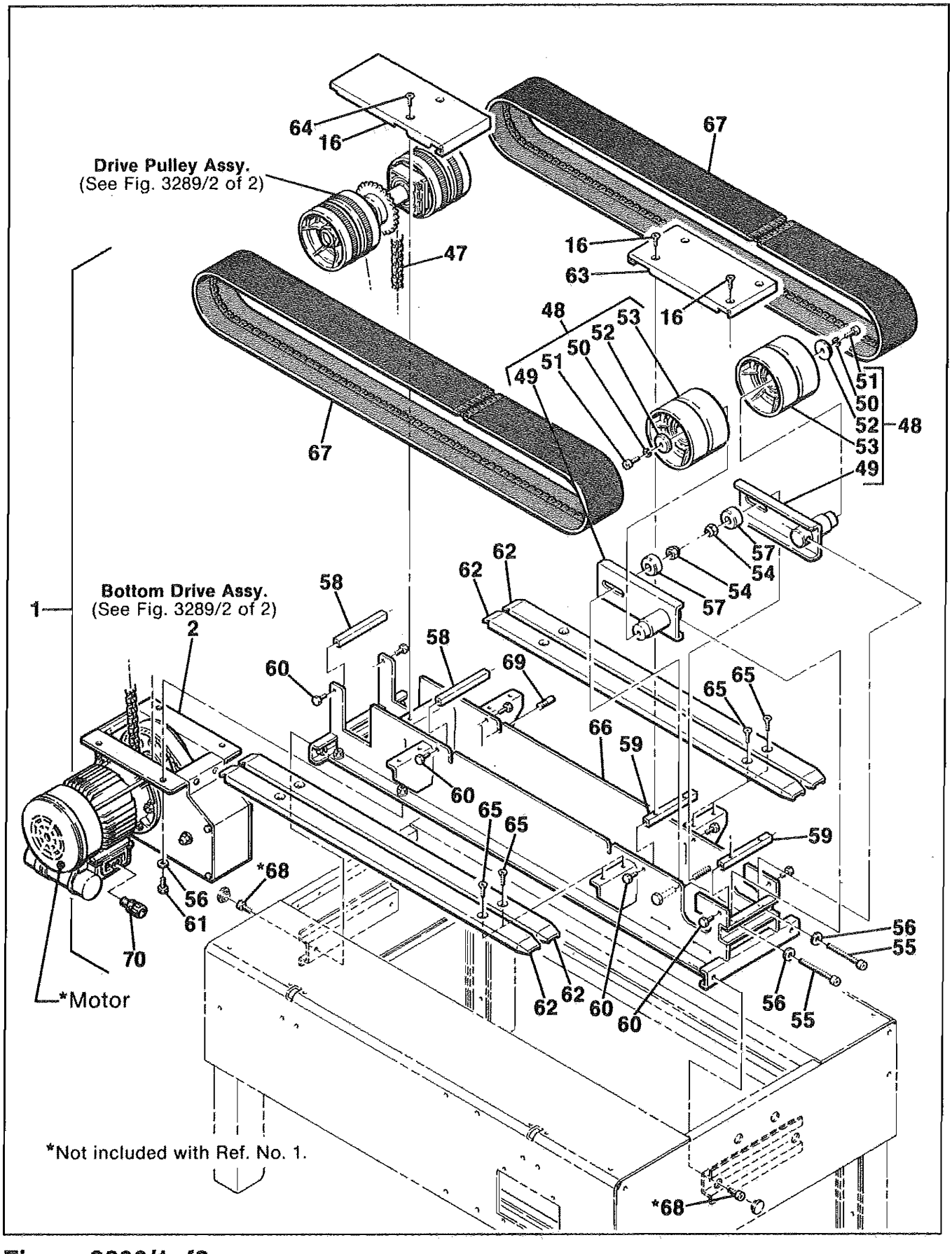

Figure 3289/1of2

Figure 3289 (Page 1 of 2)

Ref. No.	3M Part No.	Description
3289-1	78-8079-5146-8	Bottom Drive Assembly, w/o Motor
3289-2	78-8079-5147-6	Bottom Drive, w/o Motor
3289-3	78-8079-5148-4	Frame – R/H
3289-4	78-8079-5149-2	Frame – L/H
3289-5	78-8079-5150-0	Frame – Front
3289-6	78-8079-5151-8	Frame – Rear
3289-7	78-8017-9301-5	Screw – Hex Hd, M8 x 25
3289-8	26-1004-5507-5	Washer – M8
3289-9	78-8076-5479-9	Plate – Motor Mounting
3289-11	78-8054-8980-0	Pulley Timing Belt
3289-12	78-8054-8979-2	Housing – Bearing
3289-13	78-8028-8244-5	Key – 4 x 4 x 10 mm
3289-14	78-8079-5154-2	Sprocket
3289-15	78-8054-8877-8	Washer – 5,5/20 x 4
3289-16	26-0001-5862-1	Screw – Flat Hd Soc, M5 x 12
3289-17	78-8054-8577-4	Washer – Special
3289-18	26-1001-9843-6	Screw – Flat, Soc Hd , M6 x 16
3289-19	78-8010-7193-3	Screw – Hex Hd, M6 x 20
3289-20	78-8042-2919-9	Washer – Triple M6
3289-21	78-8060-8147-3	Reducer Pulley Assembly
3289-22	78-8054-8978-4	Reducer – Pulley
3289-23	78-8054-8988-3	Shaft – Timing Pulley
3289-24	78-8016-5855-6	E-Ring – 10 mm
3289-25	78-8017-9318-9	Washer – Plain 8 mm
3289-26	78-8017-9313-0	Nut – Self-Lock, M8
3289-27	78-8057-5724-8	Timing Belt – 187L050
3289-28	26-1003-8816-9	Screw – Set, M5 x 6
3289-29	78-8054-8982-6	Pulley – Timing 11 Teeth
3289-30	26-1003-5820-4	Screw – Hex Hd, M5 x 12
3289-31	78-8005-5741-1	Washer – Plain, M5
3289-32	78-8060-8087-1	Screw – Pan Hd, M5 x 10
3289-33	78-8054-8977-6	Spacer
3289-34	78-8054-8975-0	Spacer
3289-35	78-8079-5155-9	Belt – Timing 210L100
3289-36	78-8060-8159-8	Motor – 115V, 60Hz, S-Phase
3289-37	78-8070-1528-0	Shaft – Gearbox

100a Frame Assembly

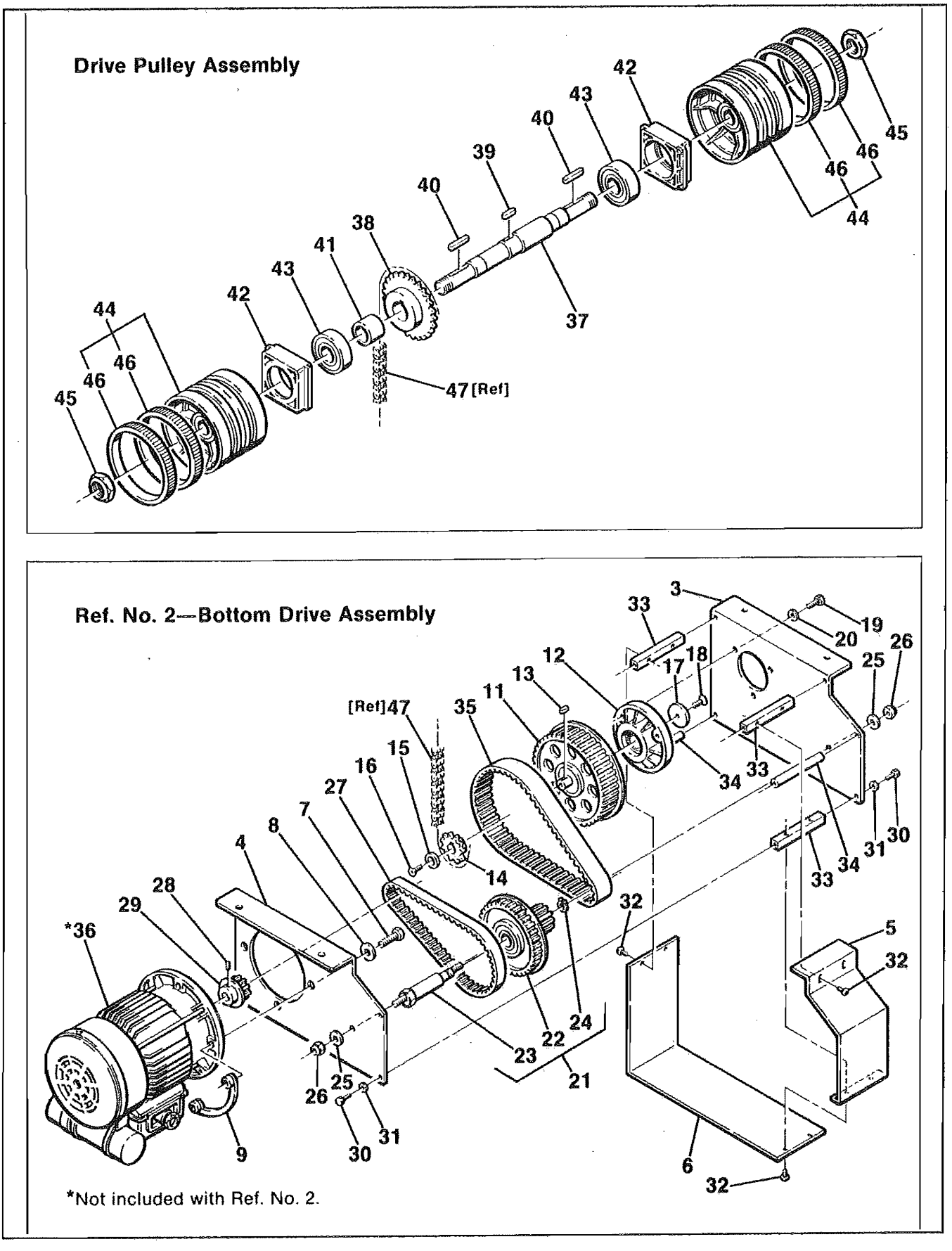

Figure 3289/2 of 2

Figure 3289 (Page 2 of 2)

Ref. No.	3M Part No.	Description
3289-38	78-8054-8986-7	Sprocket – 3/8 Inch Pitch, 28 Teeth
3289-39	78-8057-5811-3	Key – 6 x 6 x 20 mm
3289-40	78-8057-5739-6	Key – 5 x 5 x 30 mm
3289-41	78-8054-8984-2	Bushing
3289-42	78-8070-1529-8	Support – Shaft
3289-43	78-8070-1530-6	Bearing – 6205 - 2 RS
3289-44	78-8076-5105-0	Pulley Assembly – Drive
3289-45	78-8060-8416-2	Nut – Special, M20 x 1
3289-46	78-8052-6713-1	Ring – Polyurethane
3289-47	78-8018-7709-9	Chain – 3/8 Inch Pitch
3289-48	78-8070-1516-5	Belt Tensioning Assembly
3289-49	78-8070-1517-3	Belt Tensioning
3289-50	78-8010-7435-8	Washer – Lock M6
3289-51	26-1003-7957-2	Screw – Soc Hd Hex Hd, M6 x 16
3289-52	78-8052-6709-9	Washer – Special
3289-53	78-8052-6710-7	Roller – Idler
3289-54	26-1003-6918-5	Nut – Hex M10 Plastic Insert
3289-55	78-8070-1519-9	Screw – Soc Hd Hex Hd, M8 x 70
3289-56	78-8017-9318-9	Washer – Plain M8
3289-57	78-8070-1518-1	Spacer – Shaft
3289-58	78-8070-1515-7	Spacer
3289-59	78-8070-1514-0	Spacer – W/Holes
3289-60	26-1003-5829-5	Screw – Hex Hd, M6 x 12
3289-61	26-1003-5841-0	Screw – M8 x 16
3289-62	78-8070-1520-7	Guide – Drive Belt
3289-63	78-8079-5177-3	Plate – Front
3289-64	78-8079-5128-6	Plate – Rear
3289-65	26-1005-4758-2	Screw – Flat Hd, M5 x 20
3289-66	78-8079-5178-1	Frame – Drive
3289-67	78-8070-1531-4	Belt – Drive W/Hook
3289-68	26-1003-7964-8	Screw – Soc Hd,Hex Soc Dr, M8 x 20
3289-69	78-8076-4500-3	Stud – Mounting
3289-70	78-8076-4644-9	Union

100a Frame Assembly

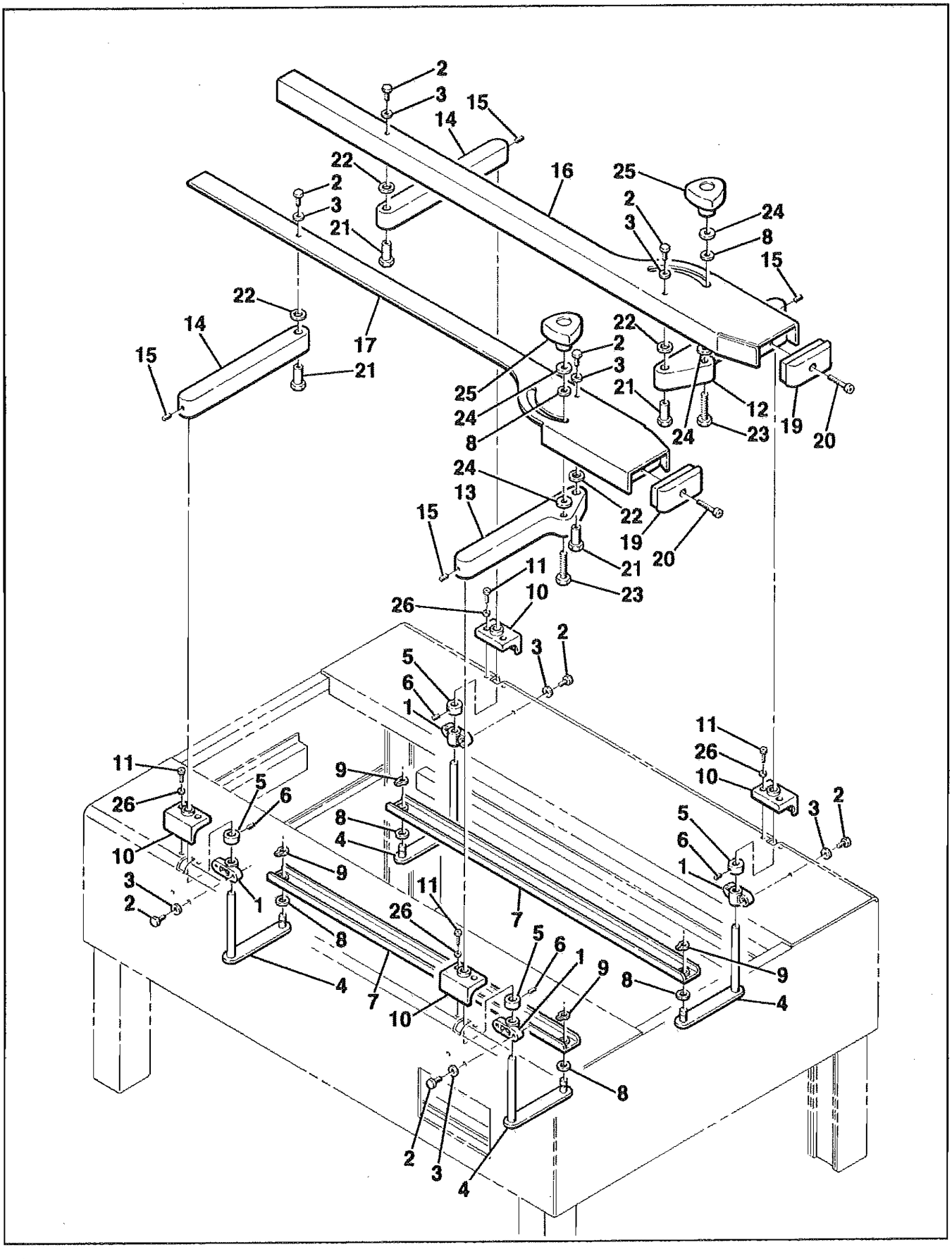

Figure 2796

Figure 2796

Ref. No.	3M Part No.	Description
2796-1	78-8070-1536-3	Support – Guide Arm
2796-2	78-8010-7169-3	Screw – Hex Hd M6 x 12
2796-3	26-1000-0010-3	Washer — Flat M6
2796-4	78-8070-1537-1	Lever With Pivot
2796-5	78-8070-1538-9	Bushing
2796-6	26-1003-8816-9	Screw – Set M5 x 6
2796-7	78-8070-1539-7	Link – Guide
2796-8	78-8017-9074-8	Washer – Nylon 15 mm
2796-9	78-8052-6733-9	Ring – Special M10
2796-10	78-8070-1540-5	Support – Lever
2796-11	78-8032-0382-3	Screw – Soc Hex Hd M5 x 16
2796-12	78-8070-1541-3	Guide Arm – Front, Right
2796-13	78-8070-1542-1	Guide Arm – Front, Left
2796-14	78-8070-1543-9	Guide Arm – Rear
2796-15	78-8076-4505-2	Set Screw – M6 x 8
2796-16	78-8070-1544-7	Guide – Right
2796-17	78-8070-1545-4	Guide – Left
2796-19	78-8070-1546-2	Cap – Guide
2796-20	26-1003-7953-1	Screw – Soc Hd M5 x 30
2796-21	78-8070-1547-0	Shaft – Guide
2796-22	78-8070-1548-8	Washer – Nylon 20 x 12, 5 x 1
2796-23	26-1003-5852-7	Screw – Hex Hd M10 x 40
2796-24	78-8052-6566-3	Washer – Friction
2796-25	78-8070-1549-6	Knob – VTR-B-M10
2796-26	78-8005-5735-3	Washer – Lock, M5

100a Frame Assembly

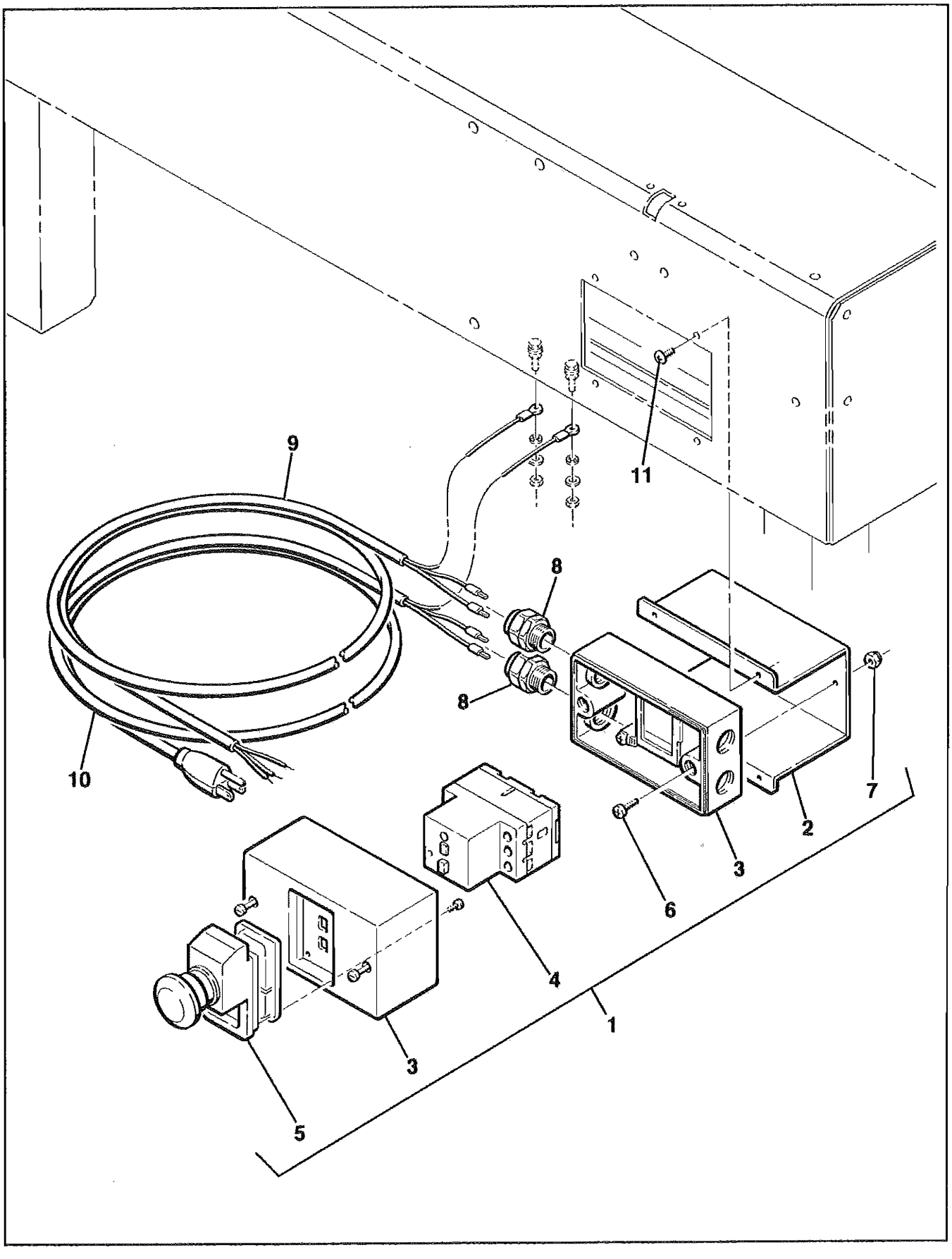

Figure 3421

Figure 3421

Ref. No.	3M Part No.	Description
3421-1	78-8076-5499-7	Switch – On/Off With Support
3421-2	78-8070-1572-8	Switch – Support
3421-3	78-8076-4879-1	Box – On/Off Switch
3421-4	78-8076-4877-5	Switch – On/Off 2,5 – 4 A
3421-5	78-8076-5455-9	E-Stop Button
3421-6	26-1003-5707-3	Screw – Phillips Dr, M4 x 16
3421-7	26-1003-6914-4	Nut – Plastic Insert M4
3421-8	78-8057-5807-1	Cord – Grip
3421-9	78-8060-8053-3	Wire – 3-Pole, 5 Meters Length
3421-10	78-8028-7909-4	Power Cord U.S.A.
3421-11	78-8060-8087-1	Screw – M5 x 10

THIS PAGE IS BLANK

100a (2 Inch Width Taping Head)

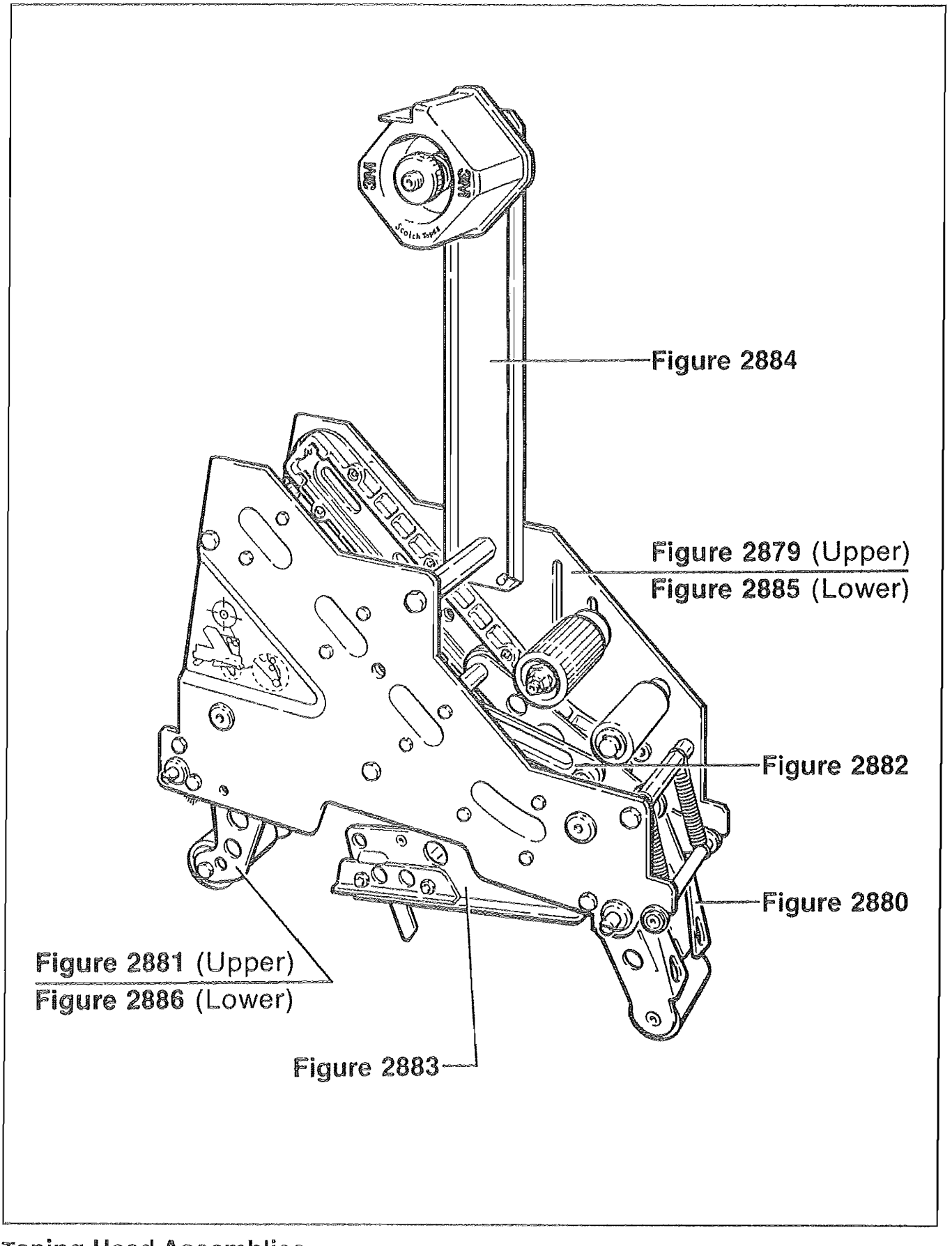

Taping Head Assemblies

100a (2 Inch Width Taping Head)

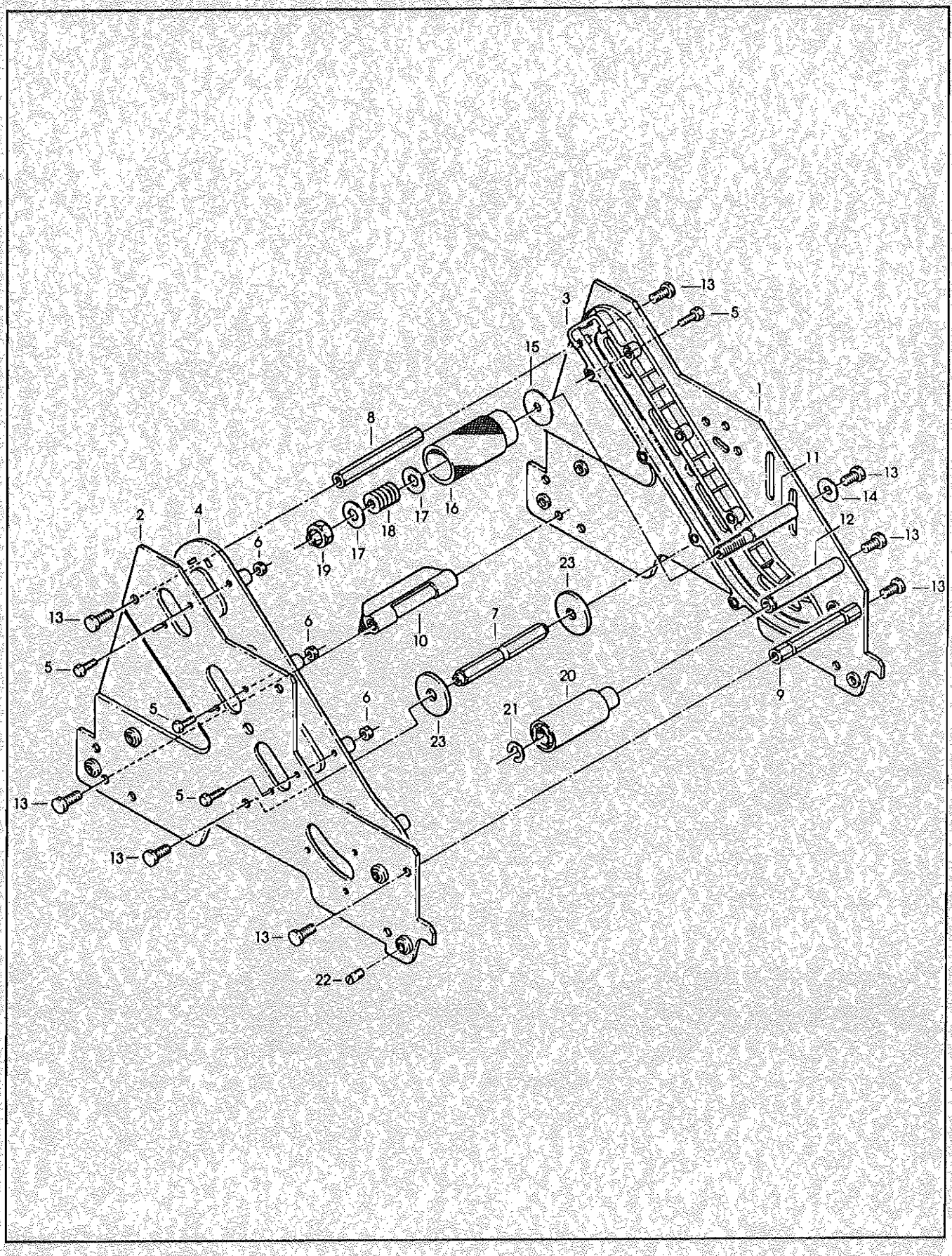

Figure 2879 Upper

Figure 2879 Upper

Ref. No.	3M Part No.	Description
2879-1	78-8070-1386-3	Frame - Tape Mount Upper Assembly
2879-2	78-8070-1387-1	Frame - Front Upper Assembly
2879-3	78-8068-4143-9	Guide - R/H
2879-4	78-8060-8414-7	Guide - L/H
2879-5	83-0002-7336-3	Screw - Hex Hd M4 X 14
2879-6	78-8010-7416-8	Nut - Hex M4
2879-7	78-8070-1251-9	Spacer - Spring
2879-8	78-8052-6559-8	Spacer - Upper
2879-9	78-8052-6560-6	Spacer - Front
2879-10	78-8060-7936-0	Brush Assembly
2879-11	78-8052-6564-8	Shaft - Tension Roller
2879-12	78-8052-6568-9	Shaft - Wrap Roller
2879-13	26-1003-5828-7	Screw - Hex Hd M6 x 12
2879-14	78-8042-2919-9	Washer - Triple M6
2879-15	78-8070-1268-3	Washer - Roll Back Up
2879-16	78-8052-6565-5	Roller - Top Tension
2879-17	78-8052-6566-3	Washer - Friction
2879-18	78-8052-6567-1	Spring - Compression
2879-19	78-8017-9077-1	Nut - Self Locking M10 x 1
2879-20	78-8052-6569-7	Roller - Wrap
2879-21	26-1000-1613-3	Ring - Retaining, No. 10DIN6799
2879-22	78-8076-4500-3	Stud - Mounting
2879-23	78-8076-5242-1	Stop - Cut-Off Frame

100a (2 Inch Width Taping Head)

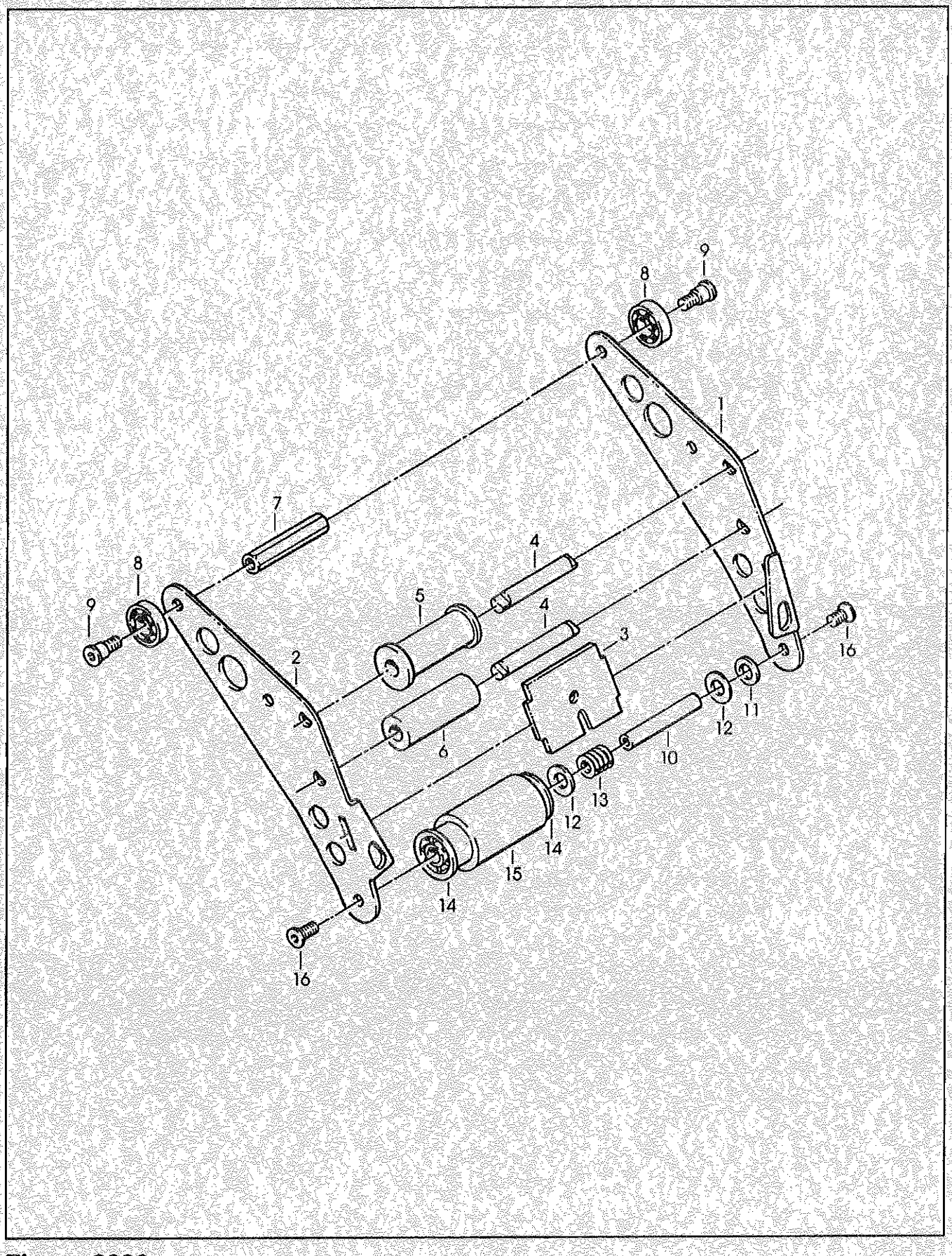

Figure 2880

Figure 2880

Ref. No.	3M Part No.	Description
2880-1	78-8070-1206-3	Applying Arm #1
2880-2	78-8070-1207-1	Applying Arm #2
2880-3	78-8070-1221-2	Plate - Tape
2880-4	78-8070-1309-5	Shaft - Roller
2880-5	78-8070-1367-3	Roller - Knurled Assembly
2880-6	78-8070-1266-7	Roller - Wrap
2880-7	78-8052-6580-4	Spacer
2880-8	78-8017-9082-1	Bearing - Special 30 mm
2880-9	78-8017-9106-8	Screw - Bearing Shoulder
2880-10	78-8052-6575-4	Shaft - Roller
2880-11	78-8017-9074-8	Washer - Nylon 15 mm
2880-12	78-8052-6566-3	Washer - Friction
2880-13	78-8052-6567-1	Spring - Compression
2880-14	78-8060-8395-8	Bushing - Applying Roller
2880-15	78-8057-6179-4	Roller - Applying NM
2880-16	26-1005-4759-0	Screw - Flat Hd M6 x 12

100a (2 Inch Width Taping Head)

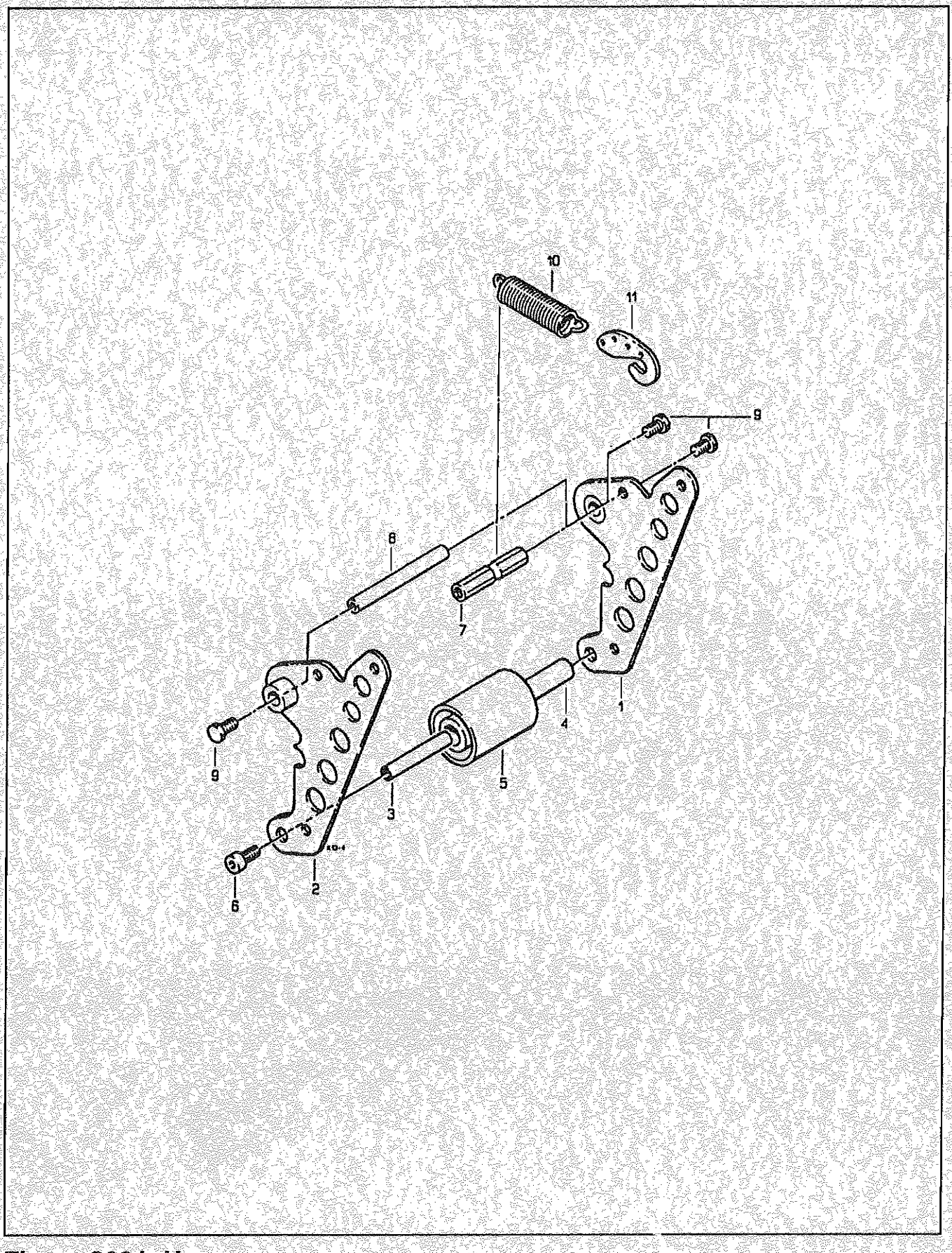

Figure 2881 Upper

Figure 2881 Upper

Ref. No.	3M Part No.	Description
2881-1	78-8070-1392-1	Buffing Arm - Sub Assembly
2881-2	78-8070-1391-3	Buffing Arm - Sub Assembly
2881-3	78-8052-6575-4	Shaft - Roller
2881-4	78-8052-6586-1	Bushing - Buffing Roller
2881-5	78-8057-6178-6	Roller - Buffing NM
2881-6	78-8076-4503-7	Screw - M6 x 12
2881-7	78-8070-1220-4	Spacer - Spring
2881-8	78-8017-9109-2	Shaft - 110 x 90 mm
2881-9	26-1003-5828-7	Screw - Hex Hd M6 x 12
2881-10	78-8070-1274-1	Spring - Upper (Silver)
2881-11	78-8070-1244-4	Holder - Spring

100a (2 Inch Width Taping Head)

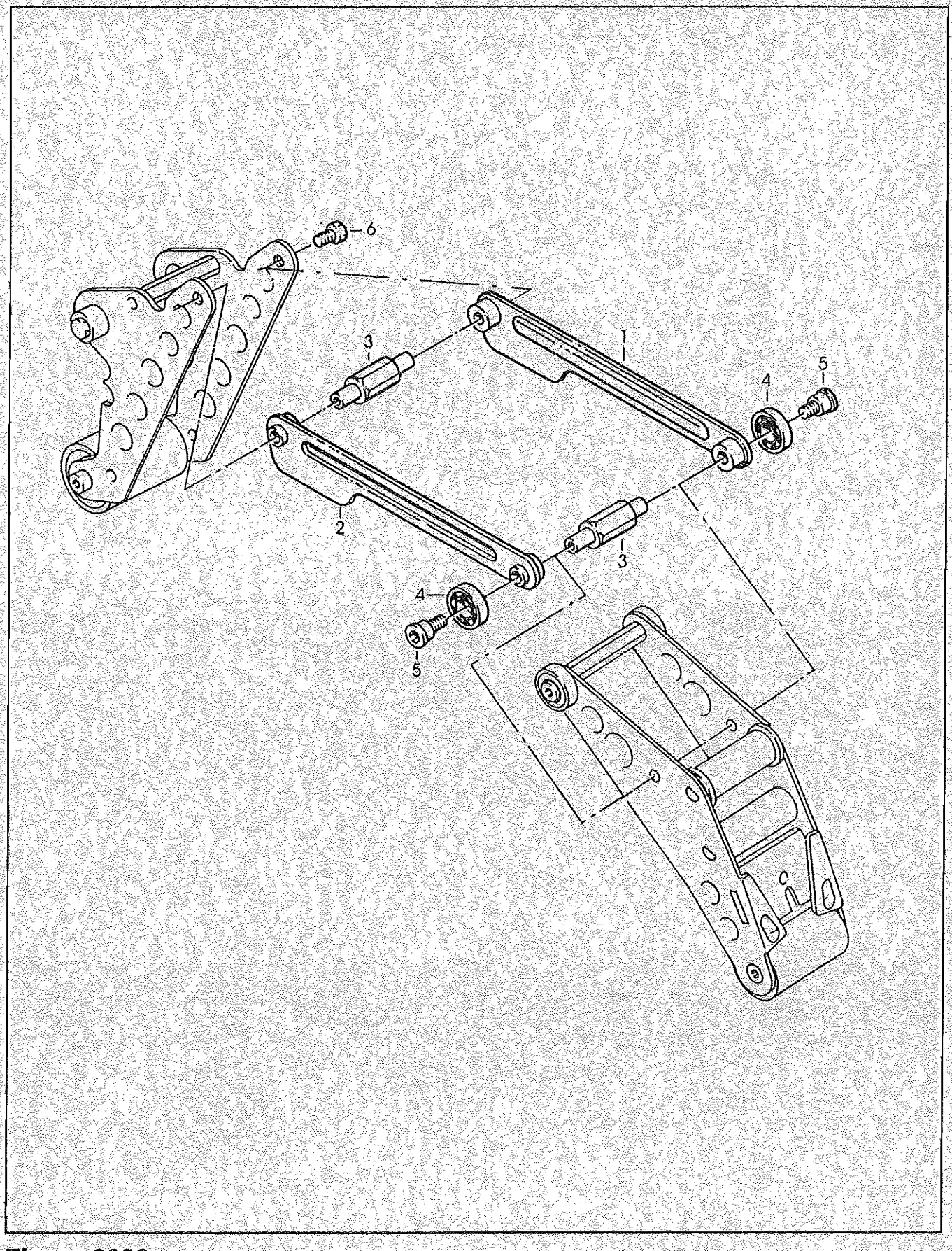

Figure 2882

Figure 2882

Ref. No.	3M Part No.	Description
2882-1	78-8070-1388-9	Link - Arm Bushing Assembly
2882-2	78-8070-1389-7	Link - Arm Bushing Assembly
2882-3	78-8070-1271-7	Shaft - Pivot
2882-4	78-8017-9082-1	Bearing - Special 30 mm
2882-5	78-8017-9106-8	Screw - Bearing Shoulder
2882-6	78-8010-7163-6	Screw - Hex Hd M5 x 10

100a (2 Inch Width Taping Head)

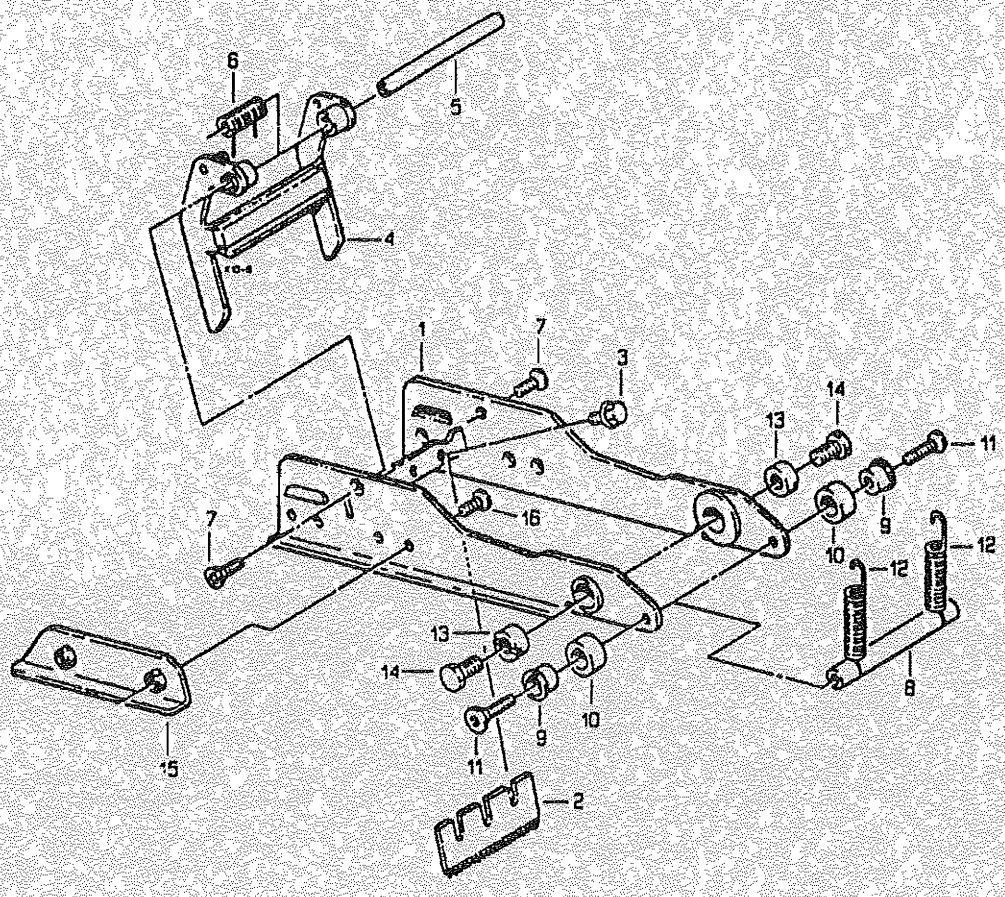

Figure 2883

Figure 2883

Ref. No.	3M Part No.	Description
2883-1	78-8070-1217-0	Frame - Cut-Off Weldment
2883-2	78-8017-9173-8	Blade - 2.56 Inch/65 mm
2883-3	26-1003-8596-7	Screw - Hex Hd M5 x 8 W/Ext. Tooth Washer
2883-4	78-8070-1371-5	Guard - Blade Assembly
2883-5	78-8052-6597-8	Shaft - Blade Guard
2883-6	78-8070-1390-5	Spring - Tension
2883-7	26-1005-4757-4	Screw - Flat Hd M4 x 100
2883-8	78-8017-9135-7	Shaft - Spacer
2883-9	78-8052-6600-0	Spacer
2883-10	78-8070-1269-1	Bumper
2883-11	26-1005-4758-2	Screw - Flat Hd M5 x 20
2883-12	78-8052-6602-6	Spring - Cutter
2883-13	78-8017-9132-4	Pivot - Cutter Lever
2883-14	26-1003-5828-7	Screw - Hex Hd M6 x 10
2883-15	78-8070-1216-2	Slide - Extension
2883-16	26-1008-6574-5	Screw - Flat Hd Phillips Dr M4 x 10

100a (2 Inch Width Taping Head)

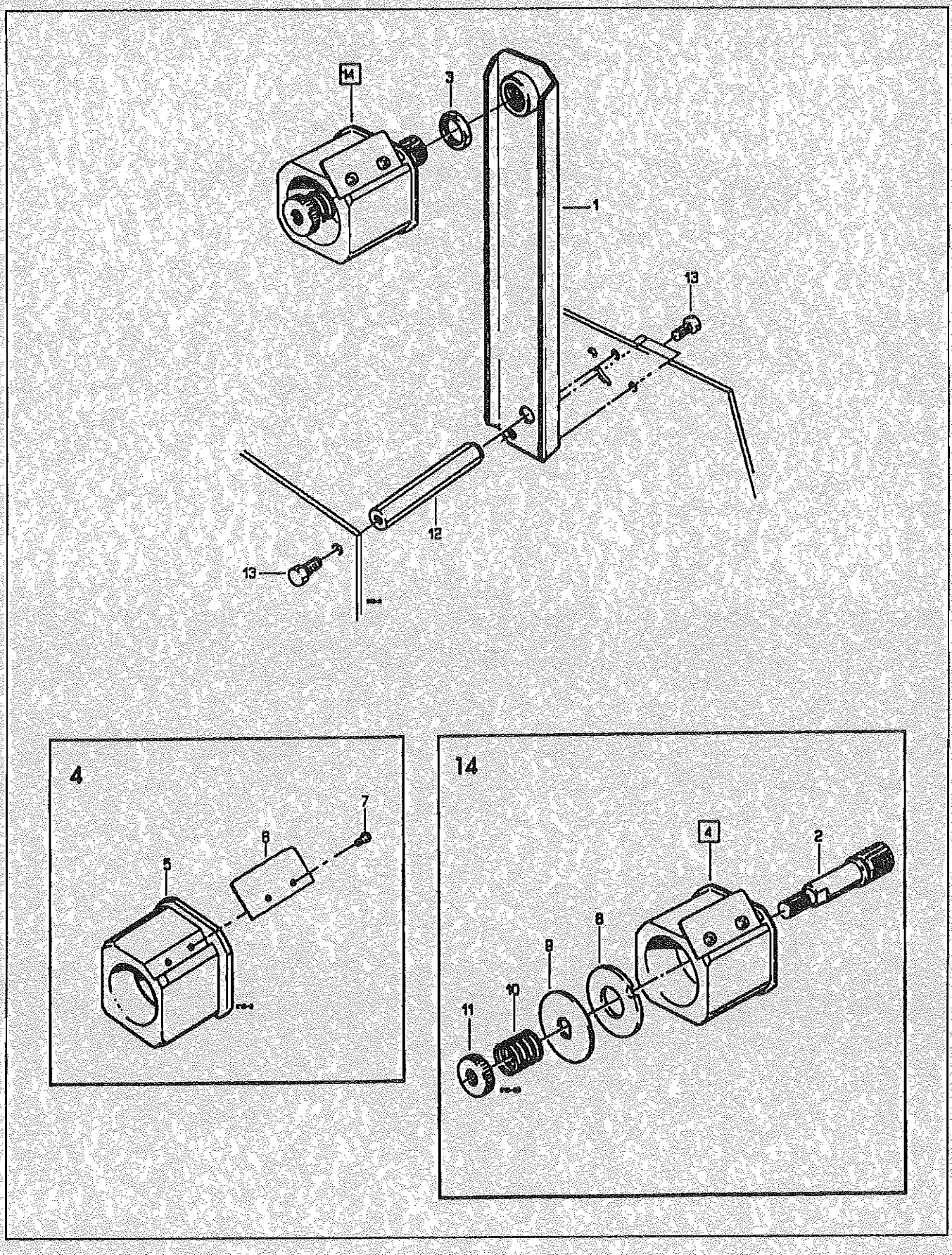

Figure 2884

Figure 2884

Ref. No.	3M Part No.	Description
2884-1	78-8070-1395-4	Bracket - Bushing Assembly
2884-2	78-8076-4519-3	Shaft - Tape Drum 2 Inch
2884-3	78-8017-9169-6	Nut - M18 x 1
2884-4	78-8070-1569-4	Tape Drum Assembly
2884-5	78-8052-6749-5	Tape Drum
2884-6	78-8052-6268-6	Leaf Spring
2884-7	26-1002-5753-9	Screw - Self Tapping
2884-8	78-8060-8172-1	Washer - Friction
2884-9	78-8052-6271-0	Washer - Tape Drum
2884-10	78-8054-8826-5	Spring
2884-11	78-8060-7851-1	Ring Nut - Adjusting
2884-12	78-8070-1215-4	Spacer - Stud
2884-13	26-1003-5828-7	Screw - Hex Hd M6 x 12
2884-14	78-8060-8474-1	Tape Drum Assembly - W/Hardware

100a (2 Inch Width Taping Head)

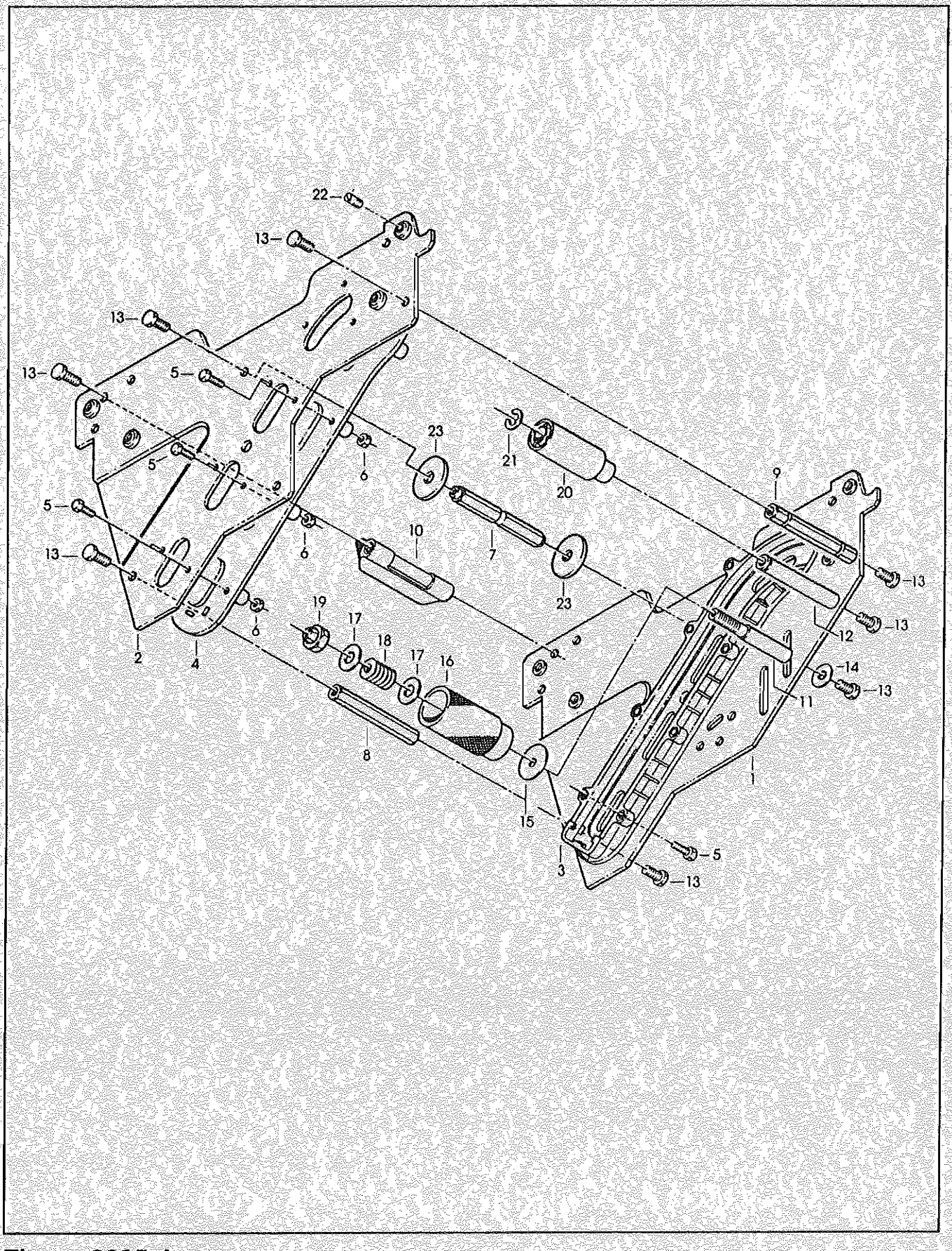

Figure 2885 Lower

Figure 2885 Lower

Ref. No.	3M Part No.	Description
2885-1	78-8070-1370-7	Frame - Front Lower Assembly
2885-2	78-8070-1369-9	Frame - Tape Mount Lower Assembly
2885-3	78-8068-4143-9	Guide - R/H
2885-4	78-8068-4144-7	Guide - L/H
2885-5	83-0002-7336-3	Screw - Hex Hd M4 x 14
2885-6	78-8010-7416-8	Nut - Hex M4
2885-7	78-8070-1251-9	Spacer - Spring
2885-8	78-8052-6559-8	Spacer - Upper
2885-9	78-8052-6560-6	Spacer - Front
2885-10	78-8060-7936-0	Brush Assembly
2885-11	78-8052-6564-8	Shaft - Tension Roller
2885-12	78-8052-6568-9	Shaft - Wrap Roller
2885-13	26-1003-5828-7	Screw - Hex Hd M6 x 12
2885-14	78-8042-2919-9	Washer - Triple M6
2885-15	78-8070-1268-3	Washer - Roll Back Up
2885-16	78-8052-6606-7	Roller - Tension Bottom
2885-17	78-8052-6566-3	Washer - Friction
2885-18	78-8052-6567-1	Spring - Compression
2885-19	78-8017-9077-1	Nut - Self Locking M10 x 1
2885-20	78-8052-6569-7	Roller - Wrap
2885-21	26-1000-1613-3	Ring - Retaining 1DIN6799
2885-22	78-8076-4500-3	Stud - Mounting
2885-23	78-8076-5242-1	Stop - Cut-Off Frame

100a (2 Inch Width Taping Head)

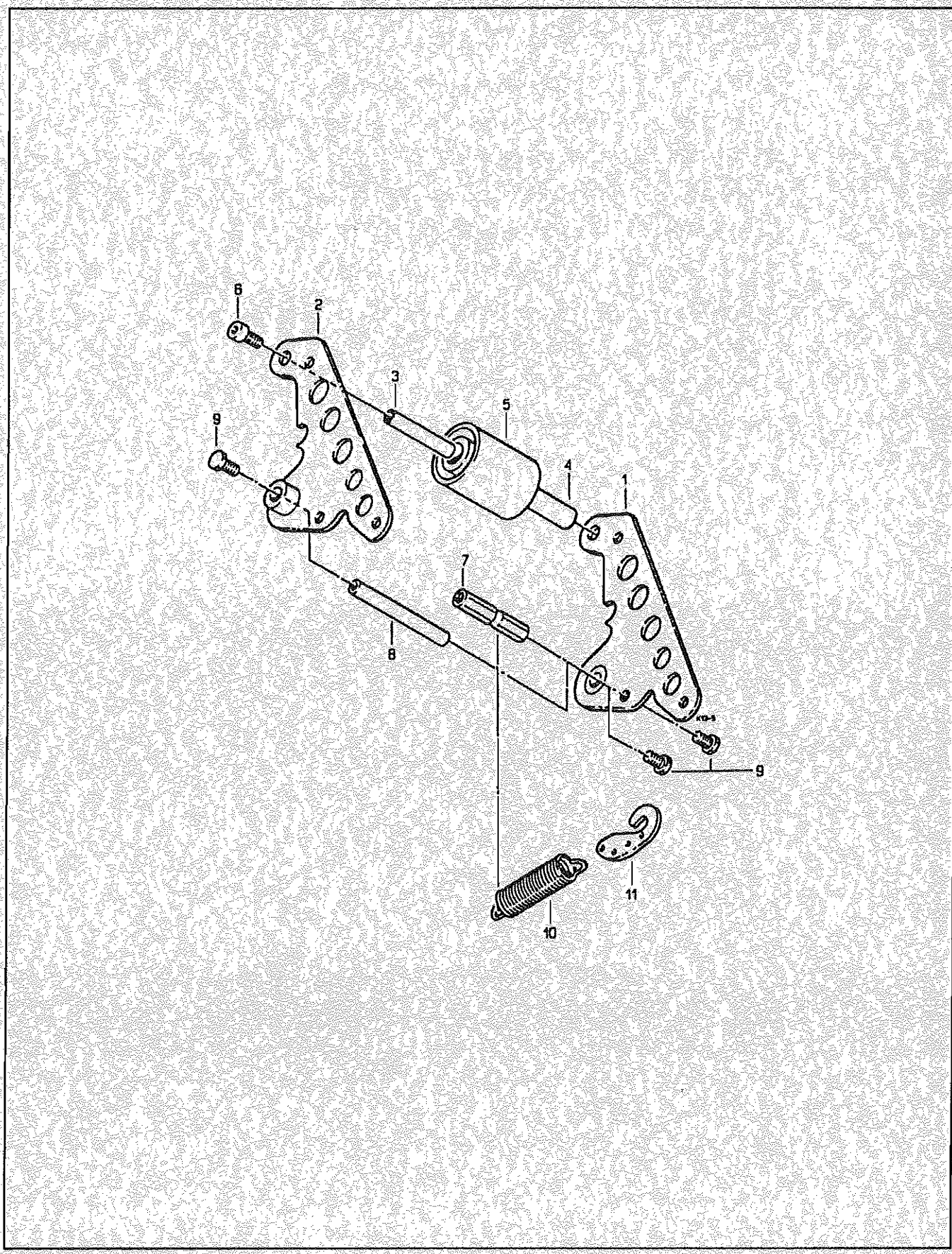

Figure 2886 Lower

Figure 2886 Lower

Ref. No.	3M Part No.	Description
2886-1	78-8070-1391-3	Buffing Arm Sub Assembly
2886-2	78-8070-1392-1	Buffing Arm Sub Assembly
2886-3	78-8052-6575-4	Shaft - Roller
2886-4	78-8052-6586-1	Bushing - Buffing Roller
2886-5	78-8057-6178-6	Roller - Buffing NM
2886-6	78-8076-4503-7	Screw - M6 x 12
2886-7	78-8070-1220-4	Spacer - Spring
2886-8	78-8017-9109-2	Shaft - 10 x 90 mm
2886-9	26-1003-5828-7	Screw - Hex Hd M6 x 10
2886-10	78-8070-1273-3	Spring - Lower (Black)
2886-11	78-8070-1244-4	Holder - Spring