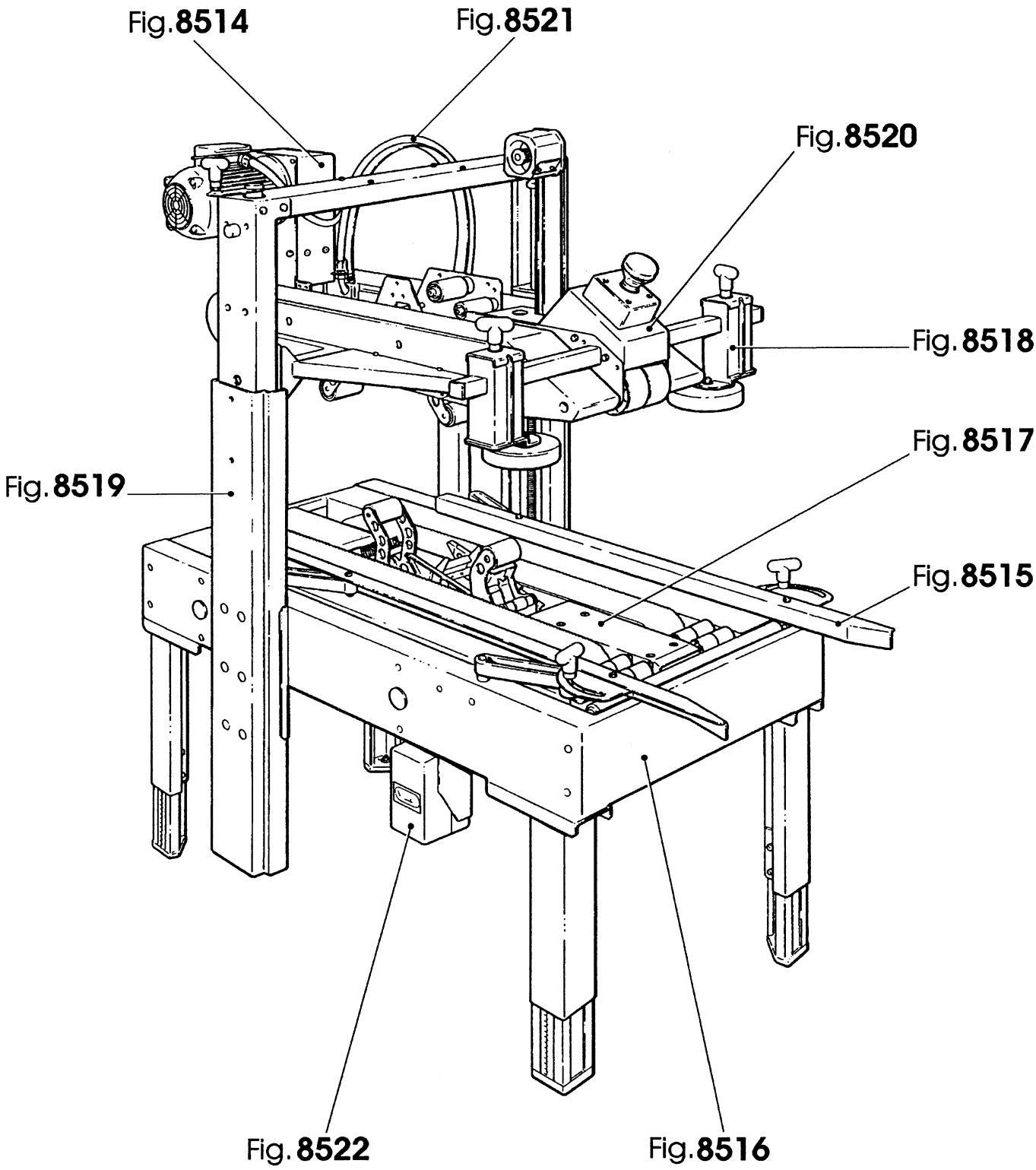
Fig.8514
Fig.8521
Fig.8520
Fig.8518
Fig.8517
Fig.8519
Fig.8515
Fig.8522
Fig.8516

Figura	Descrizione figura	Magaz.	Prodotto	Descrizione
8514	RIDUTTORE	0	7.8.04892.98A	INOX NASTRATRICE

Posizione	Ricambio	Descrizione	U.M.	Quantita'
1	3.3.06830.98	DISTANZIALE /10X81,6 INOX	PZ	2
2	3.4.00061.98	RONDELLA PIANA X VITE M5 INOX	PZ	16
3	3.4.00329.98	VITE TE M5X16 INOX	PZ	2
5	3.4.00187.98	ANELLO ARRESTO 10 DIN 471 INOX	PZ	1
6	3.4.00053.98	VITE TSVEI M6X16 INOX	PZ	1
7	3.3.02215.98	RONDELLA /6,5/30X5 INOX	PZ	1
8	3.3.06829.98	DISTANZIALE 10X10X81,6 INOX	PZ	3
9	3.4.00123.98	RONDELLA PIANA X VITE M8 INOX	PZ	2
10	3.4.00283.98	DADO AUTOBLOCCANTE M8 INOX	PZ	2
11	3.4.00516.98	VITE TSVEI M5X12 INOX	PZ	3
12	3.3.04398.98	RONDELLA /20,5/30X5 INOX	PZ	2
13	4.3.04772	PULEGGIA DOPPIA SM2 INOX AISI 304	PZ	1
14	3.4.01111	CINGHIA DENTATA 187L100	PZ	1
15	4.6.04213	SUPP.PULEG.COMP.C/CUSCIN.INOX SM-L INOX	PZ	1
16	4.6.04172	PULEGGIA PER RIDUTTORE CON INS SM2 INOX	PZ	1
17	3.4.00741	LINGUETTA 4X4X10	PZ	1
18	3.3.06826.98	PIGNONE Z=11 P=3/8" INOX	PZ	1
19	3.3.05951.98	RONDELLA /5,5/20X4 INOX	PZ	1
20	3.4.00388.98	GRANO EIPP M5X6 INOX	PZ	1
21	3.3.06902.98	PULEGGIA DENT.PD11 L=050 INOX	PZ	1
22	3.4.00140	CINGHIA DENTATA 187L050	PZ	1
29	4.6.04214	FLANGIA PER ALBERO C/CUSC.INOX SM-L INOX	PZ	2
30	3.3.06825.98	BUSSOLA /25/32X22,5 INOX	PZ	1
31	3.4.00183	LINGUETTA 5X5X30	PZ	2
33	3.4.00238	LINGUETTA 6X6X20	PZ	1
34	3.3.06824.98	CORONA Z=28 P=3/8" INOX	PZ	1
35	3.4.01124.98	CAT.ANELLO CHIUSO P=3/8" L=57 PS.COMP.GIUN.E FALSA "CZ"	PZ	1
37	3.4.00063.98	RONDELLA ELASTICA X VITE M8 INOX	PZ	4
38	3.4.00003.98	DADO M8 INOX	PZ	4
39	3.4.00655.98	RONDELLA TRIPLA X VITE M8 INOX	PZ	4
40	3.4.00058.98	VITE TE M8X25 INOX	PZ	4
41	3.3.06827.98	PERNO ECC.ESAG.20X116 INOX	PZ	1
42	3.2.01417.98B	CARTER SUP.MOTORIDUTTORE	PZ	1
44	3.4.00318.98	VITE TCEI M5X12 INOX	PZ	6
46	3.4.00033.98	RONDELLA TRIPLA X VITE M6 INOX	PZ	3
47	3.4.00057.98	VITE TE M6X20 INOX	PZ	3
48	4.7.04500	PULEGGIA PER RIDUTTORE ASS. SML2 INOX KYOWA	PZ	1
49	4.7.04501	PULEGGIA DOPPIA ASS.SM2 INOX	PZ	1
53	3.4.00371.98	VITE TE M5X12 INOX	PZ	8
55	4.7.04502	ALBERO CON FLANGE ASS.SM2 INOX	PZ	1
56	3.5.00671.98	ALBERO INOX	PZ	1
64	3.8.01993	MOTORE 220/240V 60HZ MH63 C4-B5 KW 0.12	PZ	1
65	3.8.02615	VENTOLA X MOTORE F.63	PZ	1
66	3.8.03442	MOTORE MULTITENSIONE H63 A4 KW0,12 B5 TIPO 2 "SM"	PZ	1

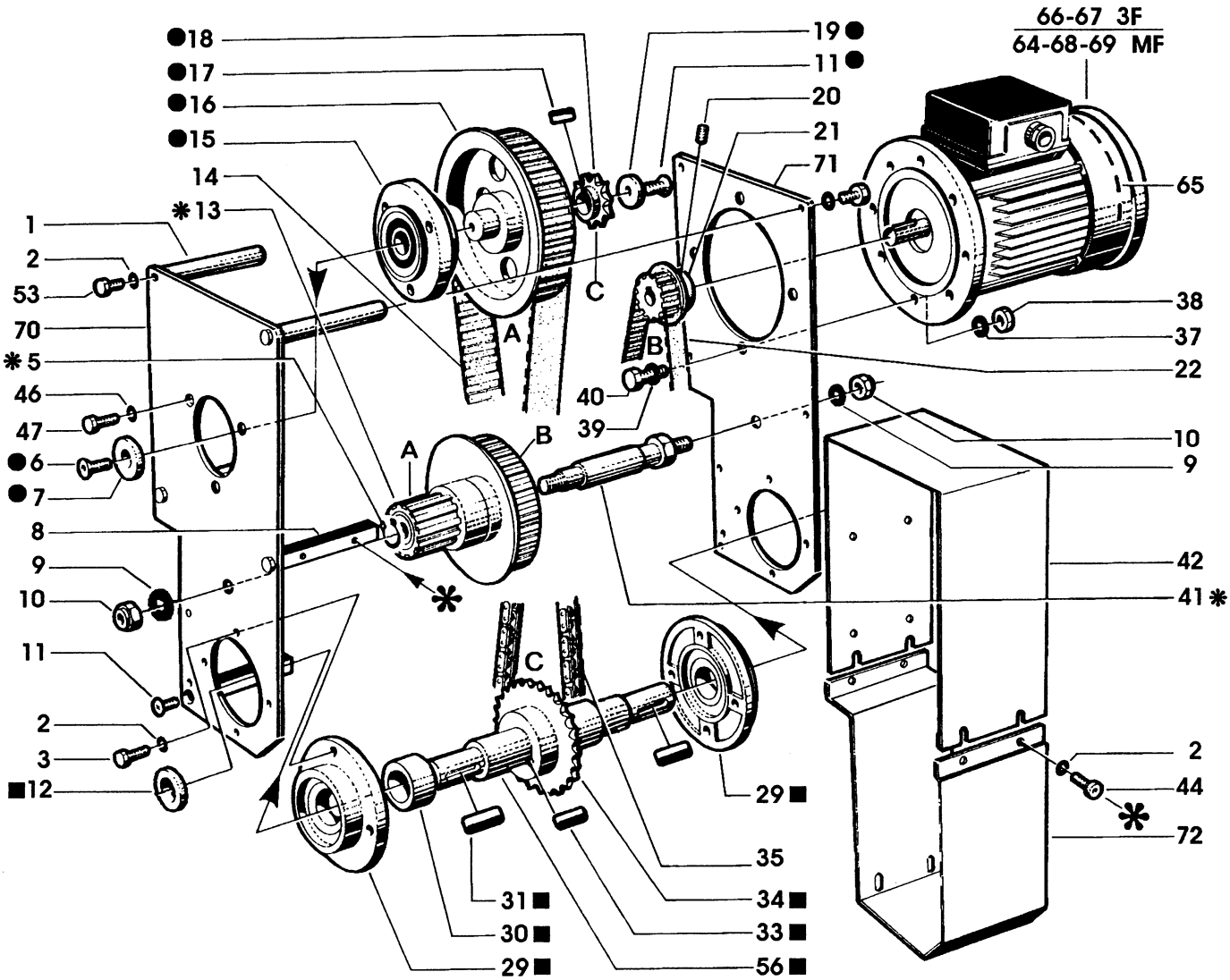
66-67 3F
64-68-69 MF
●18
●17
●16
●15
14
✱13
1
2
53
70
✱5
46
47
●6
●7
8
9
10
11
2
3
■12
19●
11●
20
21
71
65
38
37
22
10
9
42
41✱
2
44
✱
72
29■
35
34■
33■
56■
31■
30■
29■
A
B
C
40
39
●=48
✱=49
■=55

Figura	Descrizione figura	Magaz.	Prodotto	Descrizione
8514	RIDUTTORE	0	7.8.04892.98A	INOX NASTRATRICE

Posizione	Ricambio	Descrizione	U.M.	Quantita'
67	3.8.03440	MOTORE MULTITENSIONE H63 A4 KW0,12 B5 TIPO 1 "SM"	PZ	1
68	3.8.03446	MOTORE MULTITENSIONE MH63 C4 KW0,12 B5 TIPO 5 "SM"	PZ	1
69	3.8.03449	MOTORE MULTITENSIONE MH63 C4 KW0,12 B5 TIPO 6 "SM"	PZ	1
70	3.2.04573.98	SPALLA SX X RIDUTTORE INOX	PZ	1
71	3.2.04572.98	SPALLA DX X RIDUTTORE INOX	PZ	1
72	3.2.04140.98	CARTER INF.PER MOTORID.K13 22A 77A 77R	PZ	1

Data 02/10/2001

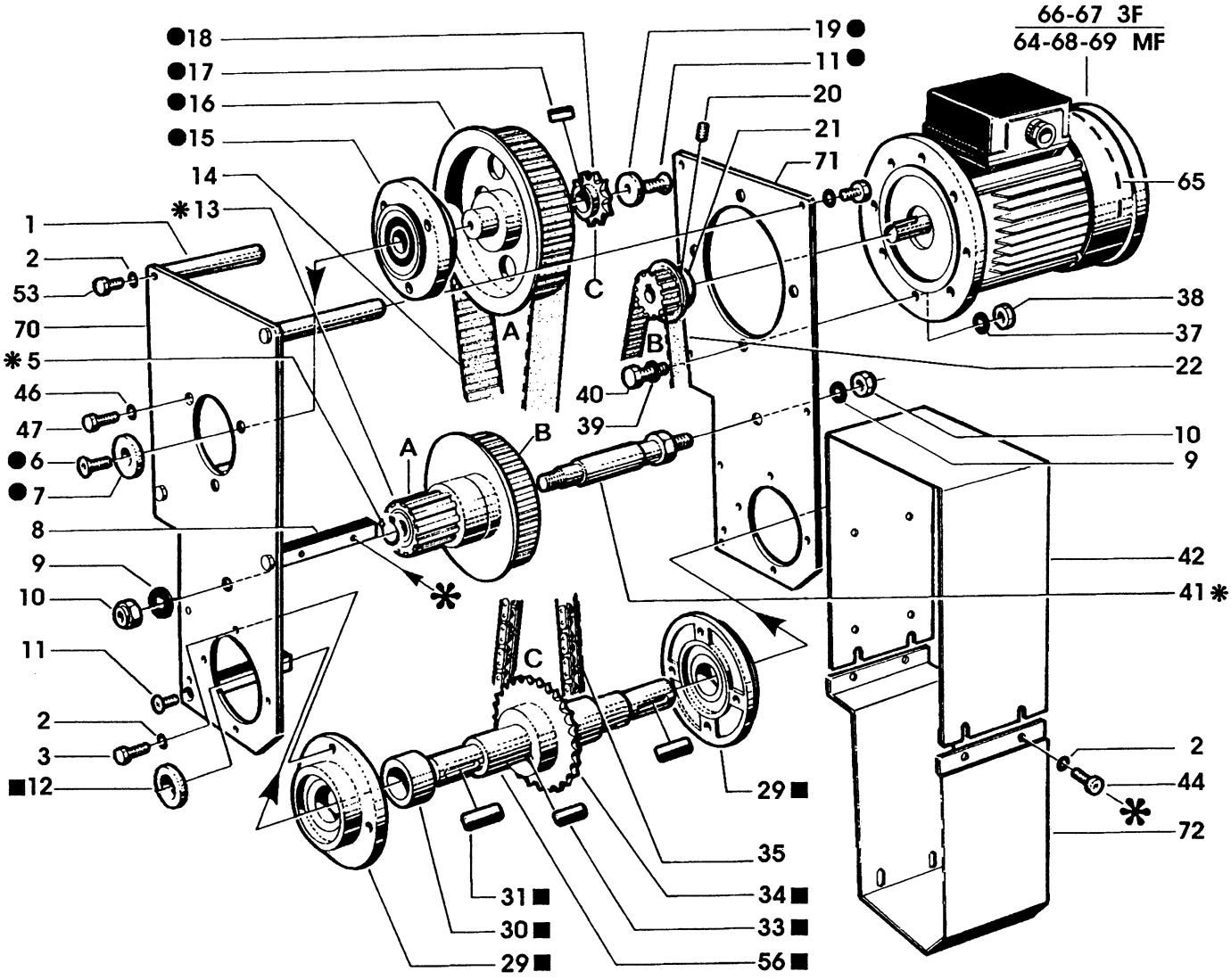
66-67 3F
64-68-69 MF
●18
●17
●16
●15
14
✱13
1
2
53
70
✱5
46
47
●6
●7
8
9
10
11
2
3
■12
19●
11●
20
21
71
65
38
37
22
10
9
42
41✱
2
44
✱
72
40
39
A
B
C
29■
35
34■
33■
56■
31■
30■
29■
● =48
✱ =49
■ =55

Figura	Descrizione figura	Magaz.	Prodotto	Descrizione
8515	LEVE	0	7.8.04892.98A	INOX NASTRATRICE

Posizione	Ricambio	Descrizione	U.M.	Quantita'
1	3.3.05331.98	PERNO /12X221 INOX	PZ	4
2	3.1.00574	BUSSOLA DI GUIDA	PZ	8
3	3.4.00062.98	RONDELLA PIANA X VITE M12 INOX	PZ	4
4	3.1.00568.05	LEVA L=115	PZ	4
5	3.4.00160.98	VITE TCEI M6X20 INOX	PZ	8
6	3.4.00002.98	DADO M6 INOX	PZ	8
7	3.2.00893.98	BARRA ACCOPPIAMENTO LEVE INOX	PZ	2
8	3.3.08317.98	PERNO SPECIALE M6 INOX	PZ	4
9	3.4.00175.98	RONDELLA PIANA X VITE M6 INOX	PZ	8
10	3.4.00258.98	DADO AUTOBLOCCANTE M6 INOX BASSO	PZ	8
11	3.1.00573.05	DISTANZIALE /24X15	PZ	4
12	3.1.00571.05	LEVA BLOCCAGGIO L=194	PZ	2
13	3.1.00569.05	LEVA L=194	PZ	2
14	3.2.00889.98	GUIDA DX SM2 INOX	PZ	1
15	3.2.00938.98	GUIDA SX SM2 INOX	PZ	1
16	3.3.05330.98	PERNO /10X41 INOX	PZ	4
17	3.4.00837.98	ANELLO ARRESTO 10SP220	PZ	4
18	3.4.00219.98	RONDELLA PIANA X VITE M10	PZ	4
19	3.4.00499.98	VITE TE M10X35 INOX	PZ	2
20	3.4.01170.98	RONDELLA DENT.EST./10 INOX	PZ	2
21	4.6.01733.40	MANOPOLA CON INS.FILETT. COMP.	PZ	2

Data 02/10/2001

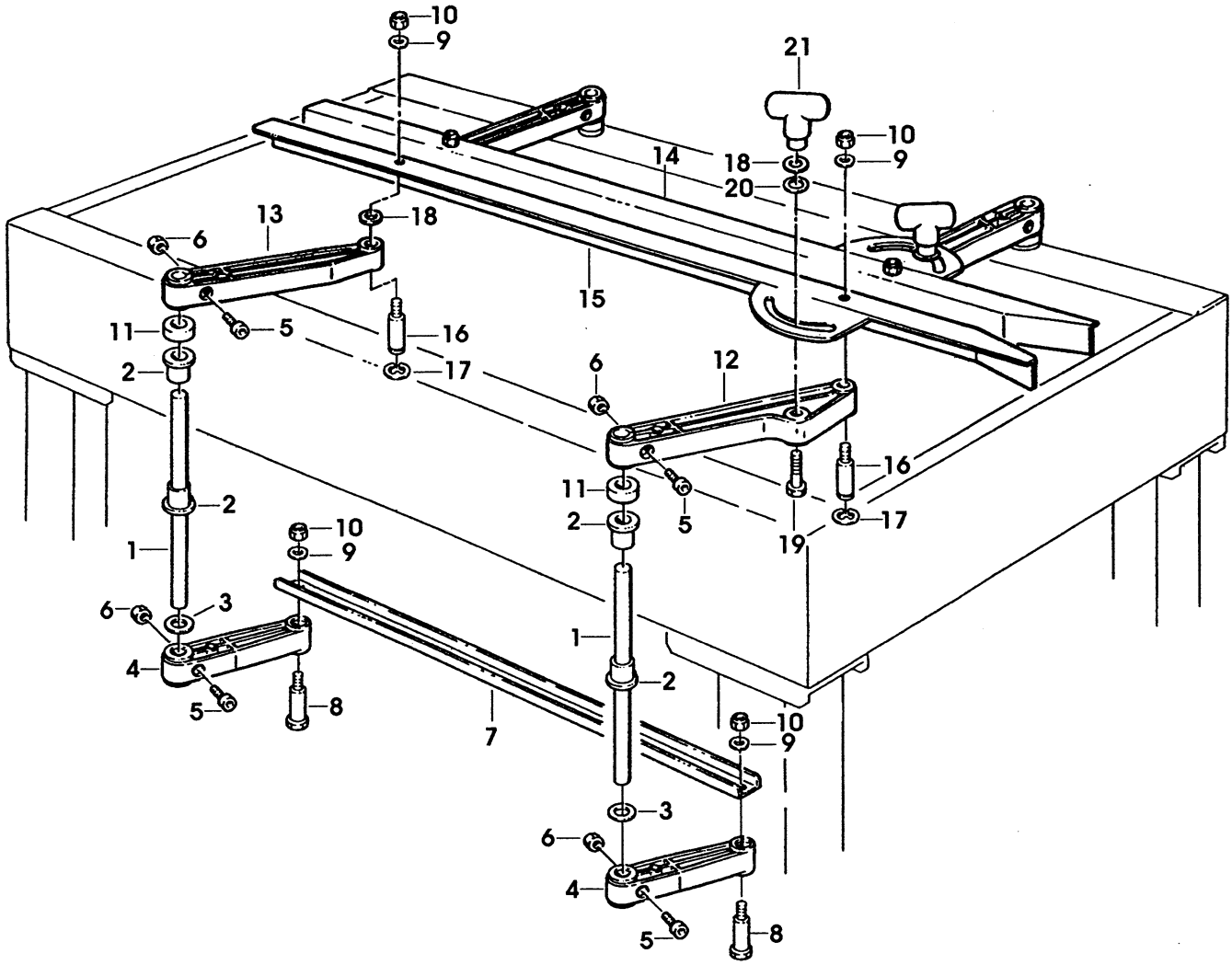
10
9
21
10
9
14
18
20
13
18
6
15
11
5
16
2
17
6
12
16
11
2
5
17
19
2
10
9
1
6
3
1
4
2
5
8
7
10
9
3
6
4
5
8

Figura	Descrizione figura	Magaz.	Prodotto	Descrizione
8516	BANCALE	0	7.8.04892.98A	INOX NASTRATRICE

Posizione	Ricambio	Descrizione	U.M.	Quantita'
1	4.5.05181.98	BANCALE C/INSERTI SM2 INOX	PZ	1
2	4.7.04494	GAMBA ASS.DX SM2 INOX	PZ	2
3	4.7.04495	GAMBA ASS.SX SM2 INOX	PZ	2
4	4.4.03196.98B	GAMBA DX H=350 SM INOX	PZ	2
5	4.4.03197.98B	GAMBA SX H=350 COPM.SM2 INOX	PZ	2
6	4.4.01723.98	GAMBA SCORREV.H=350 SM2 INOX	PZ	4
7	3.2.00858.98	MORSETTO FILETTATO INOX	PZ	4
8	3.2.00859.98	STAFFA ESTERNA SM2 INOX	PZ	4
9	3.4.00584.98	VITE TCEI M8X16 INOX	PZ	8
10	3.1.00581.05	PIEDINO	PZ	4
11	3.4.00280.98	VITE TE M8X20 INOX	PZ	4
12	3.4.00655.98	RONDELLA TRIPLA X VITE M8 INOX	PZ	4
13	3.4.00283.98	DADO AUTOBLOCCANTE M8 INOX	PZ	4
14	3.0.01116.96A	RIGHELLA MILLIMETRATA SM/XL STANDARD 350/890	PZ	4
15	3.4.00122.98	VITE TCEI M8X20 INOX	PZ	20
16	4.7.04504	RULLO /30X438 ASS.SM2 INOX CON PERNO	PZ	1
17	3.1.00610	ANELLO A SCATTO	PZ	1
18	4.7.10992.00A	PIANO DI SCORRIMENTO DX SM2 INOX	PZ	1
19	4.7.10993.00A	PIANO DI SCORRIMENTO SX SM2 INOX	PZ	1
20	4.5.05182.98	PIANO DI SCORRIMENTO DX C/INS. SM2 INOX	PZ	1
21	4.5.05184.98	PIANO DI SCORRIMENTO SX C/INS. SM2 INOX	PZ	1
22	3.3.12798.98	DISTANZIALE /8X188 SM2 INOX	PZ	4
23	3.4.00720.98	VITE M5X12 TESTA MEZZA TONDA CROCE INOX	PZ	4
24	3.1.00564.40	RULLINO /32X38	PZ	8
25	3.4.00836.98	ANELLO ARRESTO 8SP220 INOX	PZ	4
26	4.5.05185.98	PIASTRINA X PIANO DI SCORRIM. C/INS.SM2 INOX	PZ	4
27	3.4.00577.98	VITE TCEI M6X16 INOX	PZ	16
28	3.4.00175.98	RONDELLA PIANA X VITE M6 INOX	PZ	16
29	3.8.01215	PASSACAVO GOMMA CON MEMBRANA "EZ DG13,5" PER FORO /20 SP.2	PZ	2
30	3.4.00112.98	VITE TCEI M5X16 INOX	PZ	2
31	3.4.00745.98	RONDELLA DENT.X VITE M5 INOX	PZ	2
32	3.4.00061.98	RONDELLA PIANA X VITE M5 INOX	PZ	2
33	3.4.00023.98	DADO M5 INOX	PZ	2
34	3.4.01190.05	TAPPO /35X1,5	PZ	3
35	4.7.04636	RUOTA /80 ASS.INOX 22A	PZ	4
36	3.4.01501.98	RUOTA /80 INOX	PZ	4
37	3.2.02455.98	DISTANZIALE PER RUOTE INOX	PZ	4
38	3.2.01450.98A	RONDELLA SPECIALE /12X45X5X4	PZ	4
39	3.4.00062.98	RONDELLA PIANA X VITE M12 INOX	PZ	4
40	3.4.00735.98	DADO AUTOBLOCCANTE M12 INOX	PZ	4

Data 02/10/2001

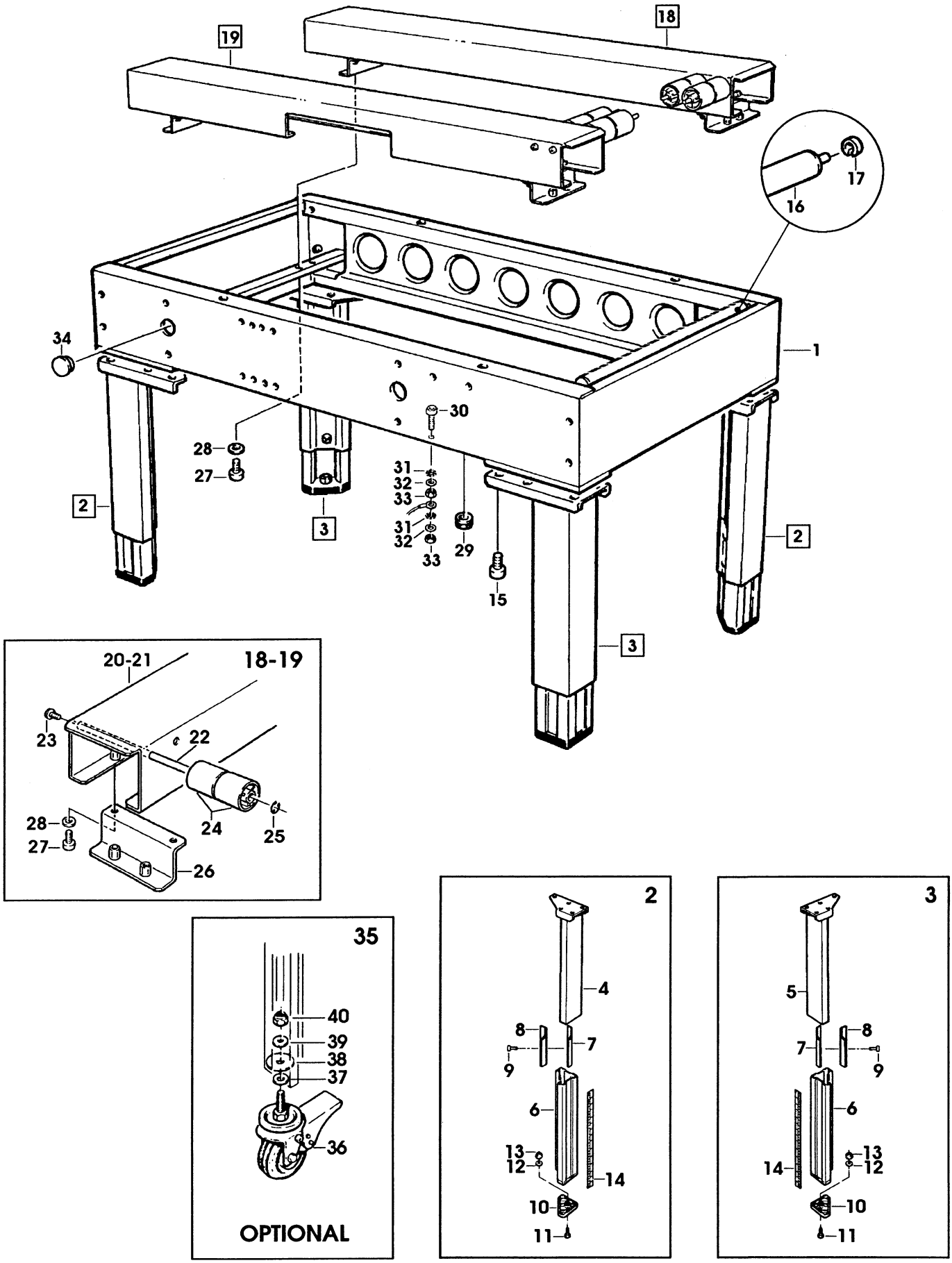
18
19
17
16
1
34
30
28
27
31
32
33
29
15
2
3
20-21
18-19
23
22
24
25
26
35
40
39
38
37
36
OPTIONAL
4
8
7
9
6
13
12
14
10
11
5

Figura	Descrizione figura	Magaz.	Prodotto	Descrizione
8517	TRASCINAMENTO INFERIORE	0	7.8.04892.98A	INOX NASTRATRICE

Posizione	Ricambio	Descrizione	U.M.	Quantita'
1	3.2.01092.98	SPALLA PRINC.INF.DX SM2 INOX	PZ	1
2	3.2.01093.98	SPALLA PRINC.INF.SX SM2 INOX	PZ	1
3	3.3.00112.98	DISTANZIALE ESAGONALE 19X90 INOX	PZ	1
4	3.5.00129	DISTANZIALE 16X52X90	PZ	1
5	3.4.00650.98	VITE TE M10X16 INOX	PZ	4
6	3.4.00026.98	VITE TE M6X16 INOX	PZ	2
7	3.4.00242.98	VITE TE M8X40 INOX	PZ	2
8	3.3.05937.98	DISTANZIALE 10X10X90 INOX	PZ	3
9	3.3.05351.98	DISTANZIALE 15X15X90	PZ	2
10	3.4.00021.98	VITE TE M6X12 INOX	PZ	10
13	3.4.00438.98	DADO AUTOBLOCCANTE M10 INOX	PZ	2
14	3.2.00745.98A	SQUADRETTA SOSTEGNO GUIDA INOX	PZ	4
15	3.4.00371.98	VITE TE M5X12 INOX	PZ	8
16	3.4.00023.98	DADO M5 INOX	PZ	8
17	3.2.00742.98	GUIDA SCORRIMENTO CINGHIA SM2 INOX	PZ	4
18	3.4.00403.98	VITE TSVEI M5X16 INOX	PZ	14
19	3.2.00860.98A	PIASTRINA FISSAGGIO GUIDE SM2 INOX	PZ	4
20	4.7.04497	PULEGGIA FOLLE ASS.SM2 INOX	PZ	2
21	3.3.04418.98	PERNO PER PULEGGIA INOX	PZ	2
22	4.6.01730	PULEGGIA FOLLE COMP.	PZ	2
23	3.3.04916.98	RONDELLA /6,5/30X5 INOX	PZ	2
24	3.4.00024.98	RONDELLA ELASTICA X VITE M6 INOX	PZ	2
25	3.4.00577.98	VITE TCEI M6X16 INOX	PZ	2
26	3.3.04419.98	RONDELLA /12,5/30X4 INOX	PZ	2
27	3.4.00018.98	DADO M12 INOX	PZ	2
28	4.9.04408	GR.RIDUTTORE (SENZA MOTORE) SM2/22A/77A INOX	PZ	1
29	3.4.00329.98	VITE TE M5X16 INOX	PZ	6
30	4.7.05886	PULEGGIA MOTRICE ASS.C/ANELLI X SM INOX	PZ	2
31	3.1.00540.48	ANELLO PER PULEGGIA	PZ	4
32	3.5.00515.98	DADO SPEC.AUTOBLOCC.M20X1 INOX	PZ	2
33	3.4.00838	CINGHIA TRASCINAMENTO SM1 75X1712 +-2,5	PZ	2
34	3.4.00051.98	VITE TCEI M6X12 INOX	PZ	4
35	3.4.00175.98	RONDELLA PIANA X VITE M6 INOX	PZ	4
36	3.2.00910.98	CARTER ANTERIORE SM2 INOX	PZ	1
37	3.2.04950.98	CARTER POSTERIORE SM2 INOX	PZ	1
38	3.1.01296	DISTANZIALE X CARTER SM-3M	PZ	6
39	3.8.02140	BOCCHETTONE SKINTOP ST11 NERO	PZ	1
40	3.2.00744.98B	CARRELLO TENDICINGHIA SM2 INOX	PZ	2
41	3.4.01752.98	VITE TB QUADRO ST M10X35 INOX	PZ	2
42	3.5.01802.98	DISTANZ.PERNO MOTORIZZAZ.INF. SM2 INOX	PZ	2

Data 02/10/2001

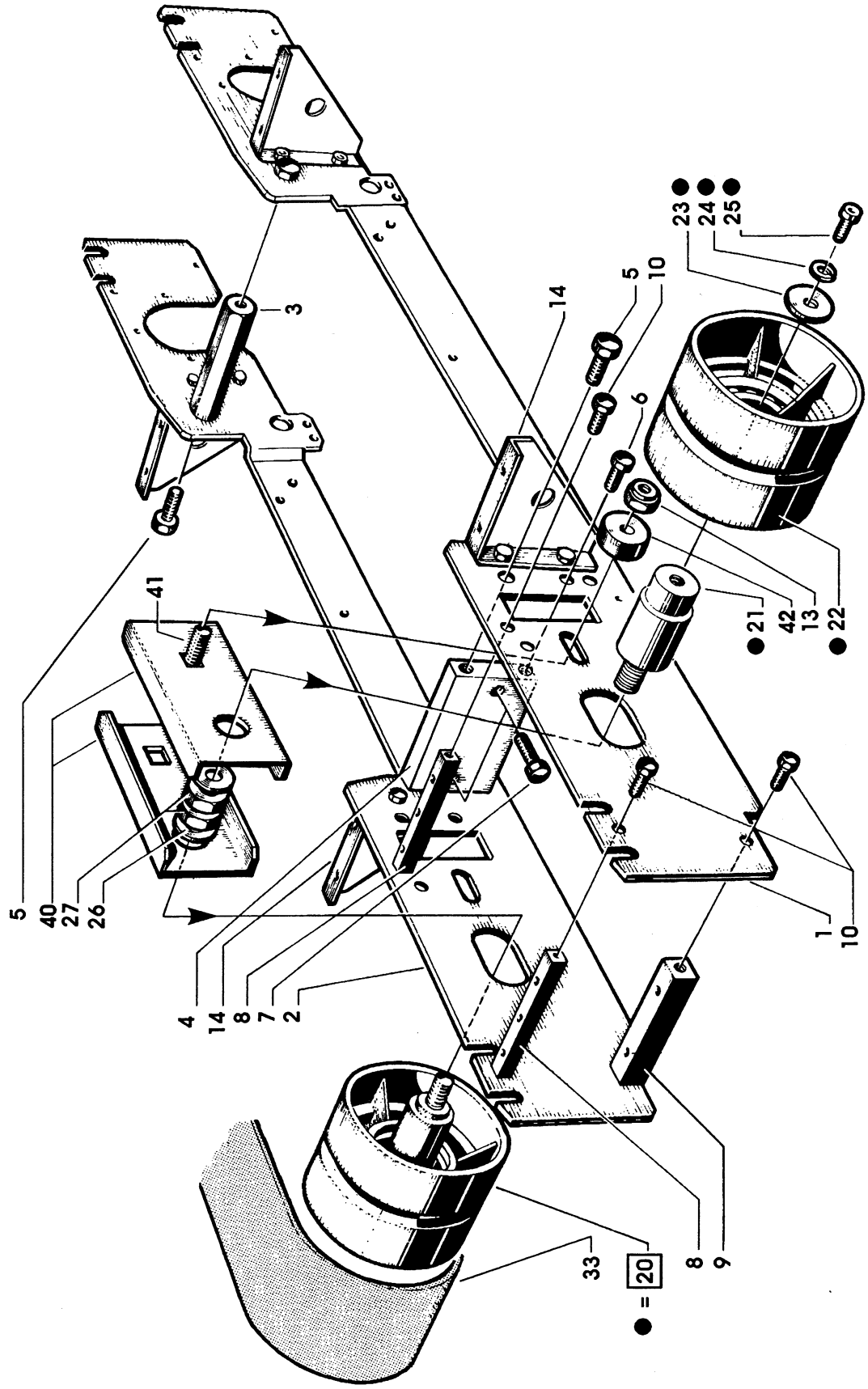
3
41
5
40
27
26
4
14
8
7
2
14
5
10
6
23●
24●
25●
21●
42
13
22●
1
10
33
20
8
9
● =

Figura	Descrizione figura	Magaz.	Prodotto	Descrizione
8517	TRASCINAMENTO INFERIORE	0	7.8.04892.98A	INOX NASTRATRICE

Posizione	Ricambio	Descrizione	U.M.	Quantita'
1	3.2.01092.98	SPALLA PRINC.INF.DX SM2 INOX	PZ	1
2	3.2.01093.98	SPALLA PRINC.INF.SX SM2 INOX	PZ	1
3	3.3.00112.98	DISTANZIALE ESAGONALE 19X90 INOX	PZ	1
4	3.5.00129	DISTANZIALE 16X52X90	PZ	1
5	3.4.00650.98	VITE TE M10X16 INOX	PZ	4
6	3.4.00026.98	VITE TE M6X16 INOX	PZ	2
7	3.4.00242.98	VITE TE M8X40 INOX	PZ	2
8	3.3.05937.98	DISTANZIALE 10X10X90 INOX	PZ	3
9	3.3.05351.98	DISTANZIALE 15X15X90	PZ	2
10	3.4.00021.98	VITE TE M6X12 INOX	PZ	10
13	3.4.00438.98	DADO AUTOBLOCCANTE M10 INOX	PZ	2
14	3.2.00745.98A	SQUADRETTA SOSTEGNO GUIDA INOX	PZ	4
15	3.4.00371.98	VITE TE M5X12 INOX	PZ	8
16	3.4.00023.98	DADO M5 INOX	PZ	8
17	3.2.00742.98	GUIDA SCORRIMENTO CINGHIA SM2 INOX	PZ	4
18	3.4.00403.98	VITE TSVEI M5X16 INOX	PZ	14
19	3.2.00860.98A	PIASTRINA FISSAGGIO GUIDE SM2 INOX	PZ	4
20	4.7.04497	PULEGGIA FOLLE ASS.SM2 INOX	PZ	2
21	3.3.04418.98	PERNO PER PULEGGIA INOX	PZ	2
22	4.6.01730	PULEGGIA FOLLE COMP.	PZ	2
23	3.3.04916.98	RONDELLA /6,5/30X5 INOX	PZ	2
24	3.4.00024.98	RONDELLA ELASTICA X VITE M6 INOX	PZ	2
25	3.4.00577.98	VITE TCEI M6X16 INOX	PZ	2
26	3.3.04419.98	RONDELLA /12,5/30X4 INOX	PZ	2
27	3.4.00018.98	DADO M12 INOX	PZ	2
28	4.9.04408	GR.RIDUTTORE (SENZA MOTORE) SM2/22A/77A INOX	PZ	1
29	3.4.00329.98	VITE TE M5X16 INOX	PZ	6
30	4.7.05886	PULEGGIA MOTRICE ASS.C/ANELLI X SM INOX	PZ	2
31	3.1.00540.48	ANELLO PER PULEGGIA	PZ	4
32	3.5.00515.98	DADO SPEC.AUTOBLOCC.M20X1 INOX	PZ	2
33	3.4.00838	CINGHIA TRASCINAMENTO SM1 75X1712 +-2,5	PZ	2
34	3.4.00051.98	VITE TCEI M6X12 INOX	PZ	4
35	3.4.00175.98	RONDELLA PIANA X VITE M6 INOX	PZ	4
36	3.2.00910.98	CARTER ANTERIORE SM2 INOX	PZ	1
37	3.2.04950.98	CARTER POSTERIORE SM2 INOX	PZ	1
38	3.1.01296	DISTANZIALE X CARTER SM-3M	PZ	6
39	3.8.02140	BOCCHETTONE SKINTOP ST11 NERO	PZ	1
40	3.2.00744.98B	CARRELLO TENDICINGHIA SM2 INOX	PZ	2
41	3.4.01752.98	VITE TB QUADRO ST M10X35 INOX	PZ	2
42	3.5.01802.98	DISTANZ.PERNO MOTORIZZAZ.INF. SM2 INOX	PZ	2

Data 02/10/2001

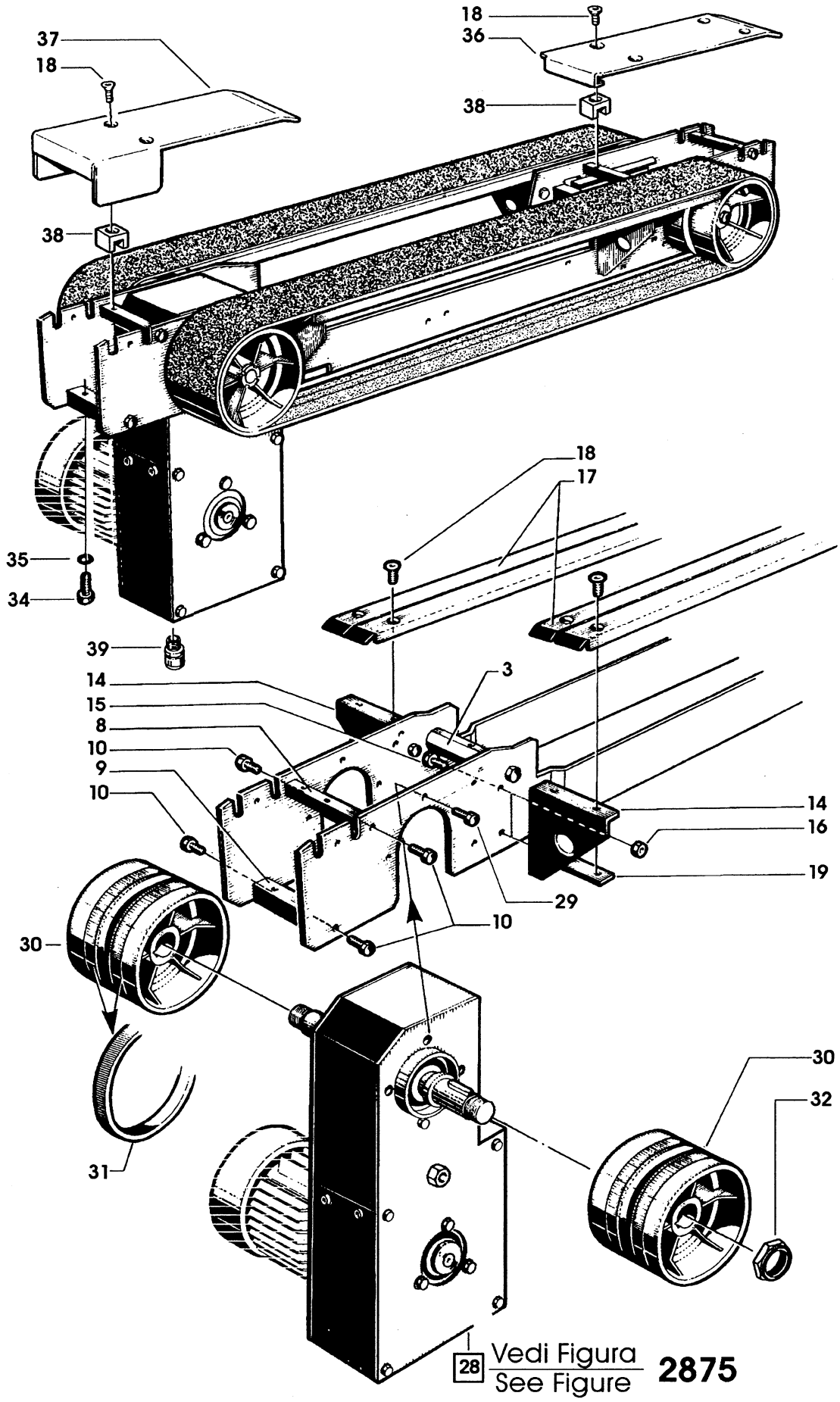
37
18
18
36
38
38
18
17
35
34
39
14
3
15
8
10
9
10
14
16
19
29
10
30
30
32
31
28 Vedi Figura
See Figure
2875

Figura	Descrizione figura	Magaz.	Prodotto	Descrizione
8518	PRESSATORI LATERALI	0	7.8.04892.98A	INOX NASTRATRICE

Posizione	Ricambio	Descrizione	U.M.	Quantita'
1	3.3.12846.98	TUBOLARE SUPPORTO PRESSATORI SM2 INOX	PZ	1
2	3.4.00652.98	VITE TE M5X40 INOX	PZ	2
3	3.4.00061.98	RONDELLA PIANA X VITE M5 INOX	PZ	2
4	3.4.00847.05	TAPPO /25X25	PZ	2
5	4.7.10990.00A	PRESSATORE LATERALE SM2 INOX	PZ	2
6	4.4.05235.98	PRESSATORE LAT.ASS.SM2 INOX	PZ	2
7	3.2.03272.98	LAMIERA SUP.MOTORIDUTTORE SM2 INOX	PZ	2
8	3.4.01752.98	VITE TB QUADRO ST M10X35 INOX	PZ	2
9	3.2.04892.98C	COPERCHIO SUPPORTO PRESSATORE LAT.SM2 INOX	PZ	2
10	3.4.00219.98	RONDELLA PIANA X VITE M10	PZ	6
11	4.6.01733.40	MANOPOLA CON INS.FILETT. COMP.	PZ	2
12	3.1.00575	RULLO PRESSATORE	PZ	2
13	3.3.06353.98	DISTANZIALE PER PRESSATORE SM INOX	PZ	2
14	3.4.02061.98	VITE TSVEI M8X40 INOX	PZ	2
15	3.3.05353.98	RONDELLA /8,5X25X4 INOX	PZ	2
16	3.4.00283.98	DADO AUTOBLOCCANTE M8 INOX	PZ	2
17	3.1.00079	RONDELLA NYLON /10,5/18X1	PZ	2

Data 02/10/2001

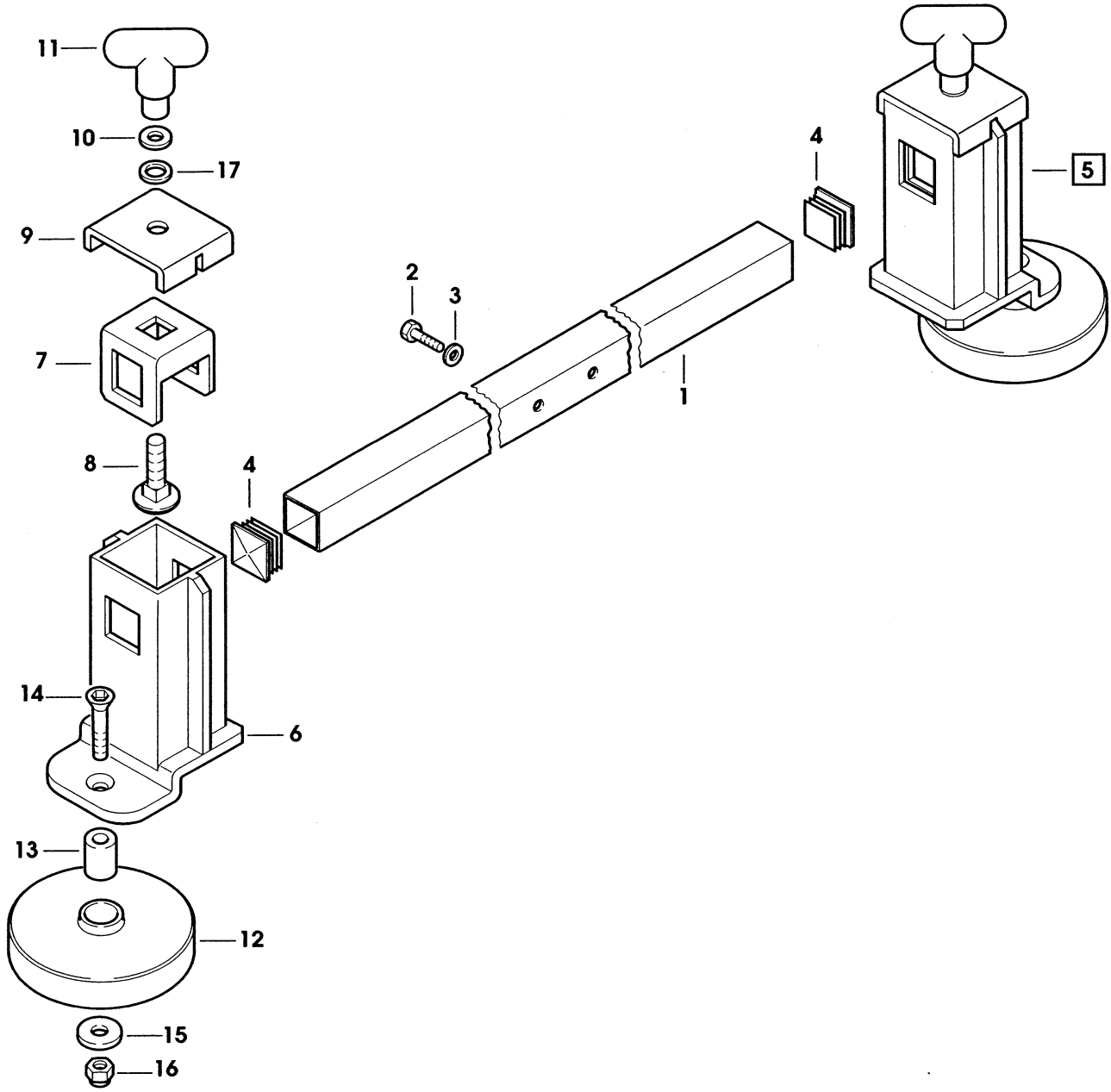

77A-INOX

Ott. 2001

Fig. **8518**

Figura	Descrizione figura	Magaz.	Prodotto	Descrizione
8519	COLONNE	0	7.8.04892.98A	INOX NASTRATRICE

Posizione	Ricambio	Descrizione	U.M.	Quantita'
1	4.4.02632.98A	COLONNA COMP.22A/77A INOX	PZ	2
2	4.3.04639	PIASTRA FISSAGGIO COLONNA INOX ASS.22A INOX	PZ	2
3	3.4.00122.98	VITE TCEI M8X20 INOX	PZ	18
4	4.7.04513	CARRELLO SCORREVOLE X COLONNE 22A INOX	PZ	2
5	4.5.04195.98	COLONNA SCORREVOLE CON INSERTI 22A INOX	PZ	2
6	3.4.00750.98	CUSCINETTO /33 INOX	PZ	16
7	3.3.00069.98	VITE CUSCINETTO /9,5 SP.INOX	PZ	12
8	3.3.06086.98	VITE ECCENTRICA SPEC.INOX	PZ	4
9	3.3.06402.98	DISTANZIALE /6,5/14X3 INOX	PZ	8
10	3.4.00175.98	RONDELLA PIANA X VITE M6 INOX	PZ	16
11	3.4.00258.98	DADO AUTOBLOCCANTE M6 INOX BASSO	PZ	18
12	3.3.06292.98	BUSSOLA FINECORSA INOX	PZ	2
13	4.5.05187.98	TRAVERSA SUP.X MOTORIZZ.C/INS. SM2 INOX	PZ	2
14	3.2.01335.98A	PIASTRINA FILETTATA SML2 INOX	PZ	2
15	3.4.00848.05	TAPPO /20X40	PZ	4
16	3.3.06079.98	VITE SOLLEVAMENTO INOX	PZ	2
17	3.1.00717	CHIOCCIOLA	PZ	2
18	3.7.00149.98	MOLLA FILO/2,7 L=72 INOX	PZ	2
19	3.1.00764	PIATTELLO PER MOLLA	PZ	2
20	3.3.07428.98	FINE CORSA X COLONNE 22A INOX	PZ	2
21	3.3.06085.98	BUSSOLA PER VITE SOLLEVAMENTO 22A INOX	PZ	2
22	3.4.01022.98	SPINA ELASTICA /4X30 INOX	PZ	2
23	3.4.00247	CUSCINETTO REGGISPINTA 51103	PZ	2
24	3.1.00586	BUSSOLA	PZ	2
25	3.3.05350.98	FLANGIA PER VITE SOLLEVAMENTO INOX	PZ	2
26	3.3.05243.98	PIGNONE Z=15 P=3/8" INOX	PZ	2
27	3.4.00142.98	VITE TCEI M4X25 INOX	PZ	2
28	3.4.01023.98	CAT.ANELLO CHIUSO P=3/8" L=142 PASSI INOX C7 COMP.GIUN./C CZ	PZ	1
29	4.5.05188.98	TRAVERSA C/INS.SM2 INOX	PZ	1
30	3.3.08317.98	PERNO SPECIALE M6 INOX	PZ	2
31	3.1.00584	RULLINO TENDICATENA SM-XL	PZ	2
32	3.4.00033.98	RONDELLA TRIPLA X VITE M6 INOX	PZ	4
33	3.4.00026.98	VITE TE M6X16 INOX	PZ	8
34	3.2.05049.98	CARTER X TRAVERSA SM2 INOX	PZ	1
35	3.4.00029.98	VITE TE M4X10 INOX	PZ	8
36	3.4.00043.98	RONDELLA PIANA X VITE M4 INOX	PZ	8
37	3.2.00867.98	LEVA PER MANOPOLA SM2 INOX	PZ	1
38	3.3.02215.98	RONDELLA /6,5/30X5 INOX	PZ	1
39	3.4.00053.98	VITE TSVEI M6X16 INOX	PZ	1
40	4.7.04510	MANOPOLA ASS.SM2 INOX	PZ	1
41	3.4.00024.98	RONDELLA ELASTICA X VITE M6 INOX	PZ	1
42	3.4.00002.98	DADO M6 INOX	PZ	1
43	3.2.05016.98	PROTEZIONE LATERALE SUP.DX SM2 INOX	PZ	1

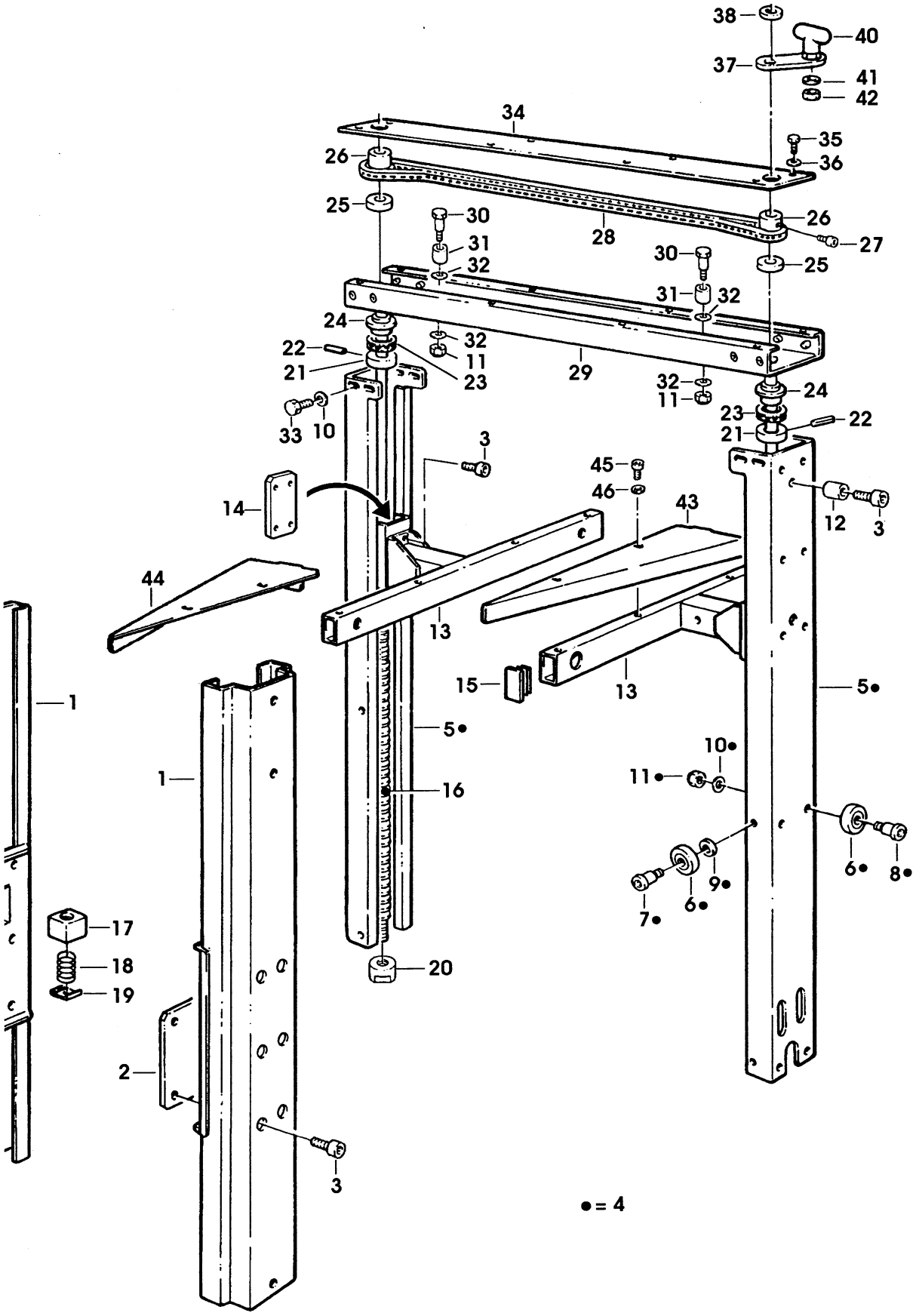
38
40
37
41
42
34
35
36
26
25
30
31
32
28
26
27
30
25
31
32
24
22
21
23
29
32
11
32
11
24
23
22
21
33
10
3
45
46
43
14
12
3
44
13
15
13
5•
1
5•
10•
1
16
11•
6•
8•
9•
6•
7•
17
18
19
20
2
3
• = 4

Figura	Descrizione figura	Magaz.	Prodotto	Descrizione
8519	COLONNE	0	7.8.04892.98A	INOX NASTRATRICE

Posizione	Ricambio	Descrizione	U.M.	Quantita'
44	3.2.05017.98	PROTEZIONE LATERALE SUP.SX SM2 INOX	PZ	1
45	3.4.00318.98	VITE TCEI M5X12 INOX	PZ	6
46	3.4.00061.98	RONDELLA PIANA X VITE M5 INOX	PZ	6

Data 02/10/2001

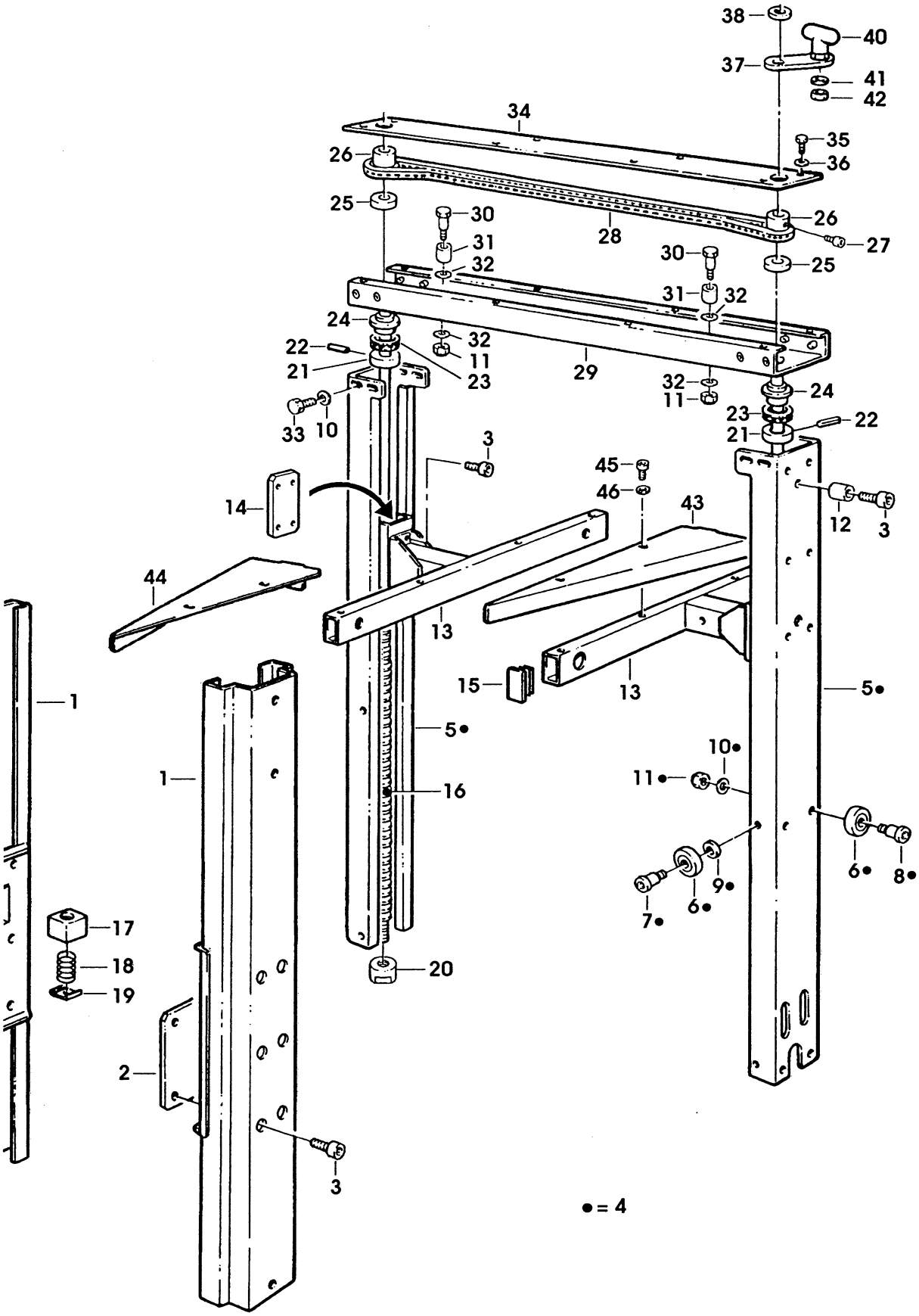
38
40
37
41
42
34
35
36
26
25
30
31
32
28
26
27
30
25
31
32
24
22
21
32
11
23
29
32
11
24
23
22
21
33
10
3
45
46
43
14
12
3
44
13
15
13
5•
1
5•
10•
1
16
11•
6•
8•
9•
6•
7•
17
18
19
20
2
3
• = 4

Figura	Descrizione figura	Magaz.	Prodotto	Descrizione
8520	TRASCINAMENTO SUPERIORE	0	7.8.04892.98A	INOX NASTRATRICE

Posizione	Ricambio	Descrizione	U.M.	Quantita'
1	3.2.04980.98	SPALLA PRINCIPALE DX SM2 INOX	PZ	1
2	3.2.04981.98	SPALLA PRINCIPALE SX SM2 INOX	PZ	1
3	3.5.00129.98	DISTANZIALE INOX	PZ	1
4	3.4.00026.98	VITE TE M6X16 INOX	PZ	2
5	3.3.05937.98	DISTANZIALE 10X10X90 INOX	PZ	2
6	3.4.00021.98	VITE TE M6X12 INOX	PZ	14
7	3.3.05356.98	VITE TE M6X12 SPECIALE INOX	PZ	5
8	3.3.00112.98	DISTANZIALE ESAGONALE 19X90 INOX	PZ	1
9	4.7.10994.00A	DISTANZIALE ESAGONALE ASS.SM2 INOX	PZ	4
10	3.3.05355.98	DISTANZIALE L=90 INOX	PZ	8
11	3.3.06147.98	DISTANZIALE ESAGONALE 10X82 INOX	PZ	2
12	3.4.00027.98	VITE TSVEI M6X12 INOX	PZ	6
14	3.4.00219.98	RONDELLA PIANA X VITE M10	PZ	4
15	3.4.00438.98	DADO AUTOBLOCCANTE M10 INOX	PZ	2
16	3.2.00745.98A	SQUADRETTA SOSTEGNO GUIDA INOX	PZ	4
17	3.4.00371.98	VITE TE M5X12 INOX	PZ	8
18	3.4.00023.98	DADO M5 INOX	PZ	8
19	3.2.00742.98	GUIDA SCORRIMENTO CINGHIA SM2 INOX	PZ	4
20	3.4.00403.98	VITE TSVEI M5X16 INOX	PZ	10
21	3.2.00860.98A	PIASTRINA FISSAGGIO GUIDE SM2 INOX	PZ	6
22	4.7.04497	PULEGGIA FOLLE ASS.SM2 INOX	PZ	2
23	3.3.04418.98	PERNO PER PULEGGIA INOX	PZ	2
24	4.6.01730	PULEGGIA FOLLE COMP.	PZ	2
25	3.3.04916.98	RONDELLA /6,5/30X5 INOX	PZ	2
26	3.4.00024.98	RONDELLA ELASTICA X VITE M6 INOX	PZ	2
27	3.4.00577.98	VITE TCEI M6X16 INOX	PZ	2
28	3.3.04419.98	RONDELLA /12,5/30X4 INOX	PZ	2
29	3.4.00018.98	DADO M12 INOX	PZ	2
30	4.9.04408	GR.RIDUTTORE (SENZA MOTORE) SM2/22A/77A INOX	PZ	1
31	3.4.00329.98	VITE TE M5X16 INOX	PZ	6
32	4.7.05886	PULEGGIA MOTRICE ASS.C/ANELLI X SM INOX	PZ	2
33	3.1.00540.48	ANELLO PER PULEGGIA	PZ	4
34	3.5.00515.98	DADO SPEC.AUTOBLOCC.M20X1 INOX	PZ	2
35	3.4.00838	CINGHIA TRASCINAMENTO SM1 75X1712 +-2,5	PZ	2
36	3.4.00242.98	VITE TE M8X40 INOX	PZ	2
37	3.4.01594.98	GRANO EIPP M6X35 INOX	PZ	4
38	3.3.05357.98	PERNO RULLI ENTRATA INOX	PZ	1
39	3.1.00580.05	RULLO ENTRATA	PZ	2
40	3.1.01275.05	PROTEZIONE DX 700a-r/KS	PZ	1
41	3.1.01276.05	PROTEZIONE SX 700a-r/KS	PZ	1
42	3.4.00515.98	VITE TCEI M8X35 INOX	PZ	2
43	3.2.00907.98	CARTER LAT.SUP.DX SM2 INOX	PZ	1
44	3.2.00940.98	CARTER LAT.SUP.SX SM2 INOX	PZ	1
45	3.4.00175.98	RONDELLA PIANA X VITE M6 INOX	PZ	10

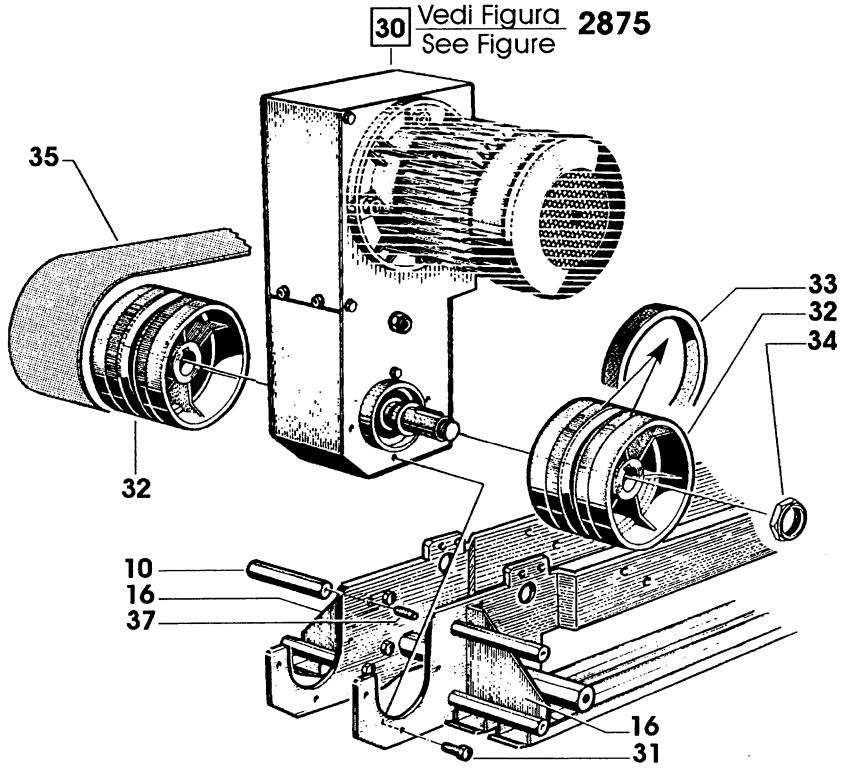
30 Vedi Figura
See Figure 2875
35
33
32
34
32
10
16
37
16
31

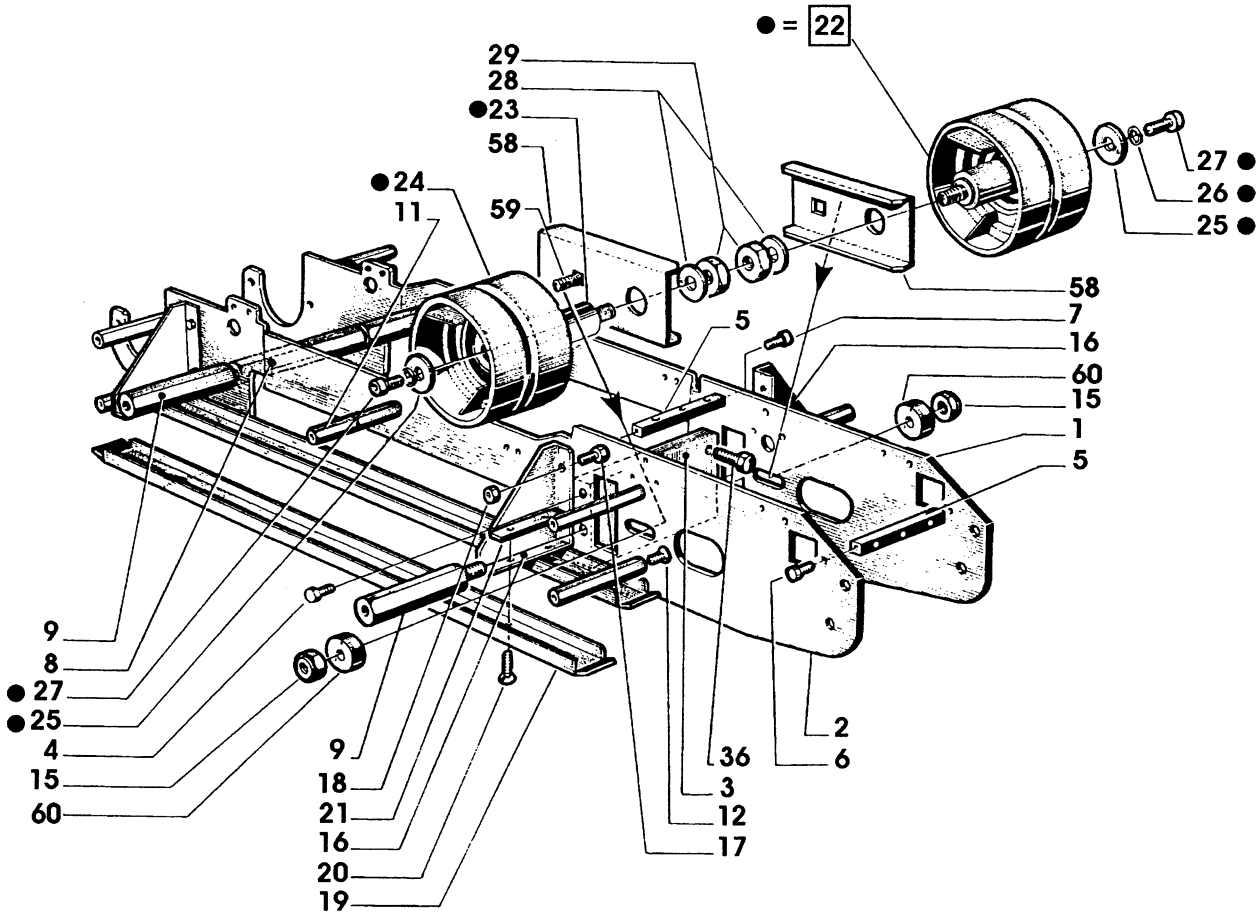
● = 22
29
28
●23
58
●24
11
59
27 ●
26 ●
25 ●
58
7
5
16
60
15
1
5
9
8
● 27
● 25
4
15
60
9
18
21
16
20
19
36
3
12
17
2
6

Figura	Descrizione figura	Magaz.	Prodotto	Descrizione
8520	TRASCINAMENTO SUPERIORE	0	7.8.04892.98A	INOX NASTRATRICE

Posizione	Ricambio	Descrizione	U.M.	Quantita'
46	4.5.04657.98	CARTER SUP.C/INS.SM2-4/94	PZ	1
47	3.1.01296	DISTANZIALE X CARTER SM-3M	PZ	2
48	3.4.01171.05	TAPPO ABS /25X1,2	PZ	1
49	3.2.05173.98	PROT.CINGHIA MOTORIZZ.SUP.SM2 INOX	PZ	2
50	3.4.00720.98	VITE M5X12 TESTA MEZZA TONDA CROCE INOX	PZ	4
51	3.1.00770.05	PROTEZIONE PER DADO	PZ	2
53	3.3.09927.98	VITE SPECIALE TE M6X20 INOX	PZ	1
54	3.4.00849.98	VITE TCEI M10X16 INOX	PZ	4
55	3.4.00051.98	VITE TCEI M6X12 INOX	PZ	4
56	3.3.06458.98	SUPP.BRACCIO PORTAROT.77A INOX	PZ	1
57	3.3.06147.98	DISTANZIALE ESAGONALE 10X82 INOX	PZ	1
58	3.2.00744.98B	CARRELLO TENDICINGHIA SM2 INOX	PZ	2
59	3.4.01752.98	VITE TB QUADRO ST M10X35 INOX	PZ	2
60	3.5.01802.98	DISTANZ.PERNO MOTORIZZAZ.INF. SM2 INOX	PZ	2

Data 02/10/2001

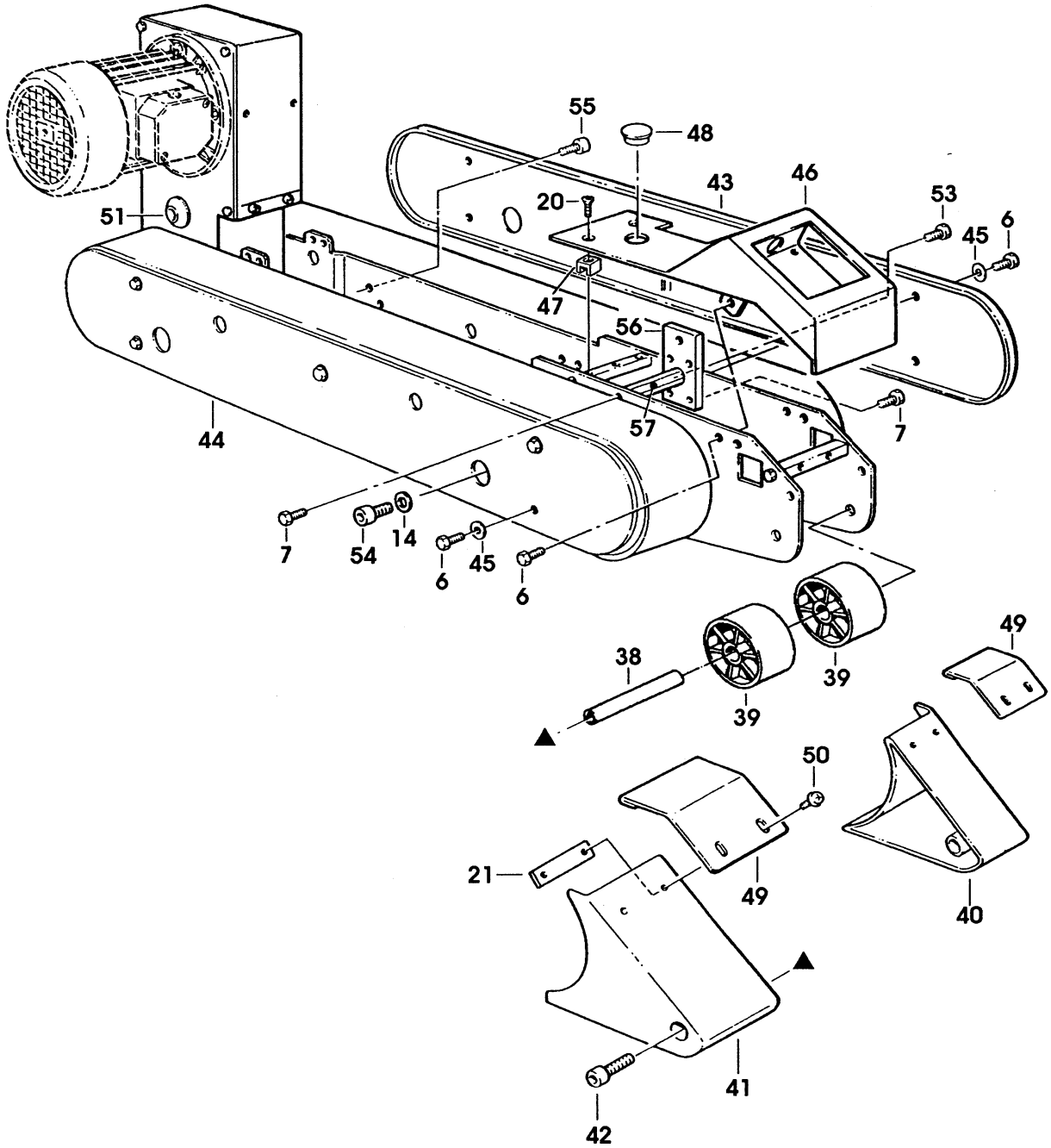
55
48
43
46
53
6
45
20
51
47
56
44
57
7
7
54
14
6
45
6
38
39
39
49
50
21
49
40
41
42

Figura	Descrizione figura	Magaz.	Prodotto	Descrizione
8521	CANALINA	0	7.8.04892.98A	INOX NASTRATRICE

Posizione	Ricambio	Descrizione	U.M.	Quantita'
1	4.5.05186.98	CANALINA X CAVI ELETTRICI C/INS.SM2 INOX	PZ	1
2	3.4.00584.98	VITE TCEI M8X16 INOX	PZ	2
3	3.1.00991	BANDELLA NYLON SM2 INOX	PZ	1
4	3.4.00056.98	VITE TE M5X10 INOX	PZ	4
5	3.4.00061.98	RONDELLA PIANA X VITE M5 INOX	PZ	4
6	3.4.00023.98	DADO M5 INOX	PZ	4
7	3.2.00969.98	SQUADRETTA SM2 INOX	PZ	1
8	3.8.01210	RACCORDO 3/8" GAS X GUAINA /12	PZ	4
9	3.8.03393	GUAINA FLESSIBILE /12 (MM.750) SM2/94-P	PZ	1
10	3.8.03392	GUAINA FLESSIBILE /12 (MM.850) SM2/94	PZ	1
11	3.8.01241	FASCETTA L=140x3,5 (NERA)	PZ	5
12	3.2.00895.98A	CARTER CANALINA SM2 INOX	PZ	1
13	3.4.00862.98	VITE TE M4X8 INOX	PZ	4
14	3.4.00039.98	RONDELLA TRIPLA X VITE M4 INOX	PZ	4
15	3.8.01216	PASSACAVO GOMMA PER FORO /16,5	PZ	2

Data 02/10/2001

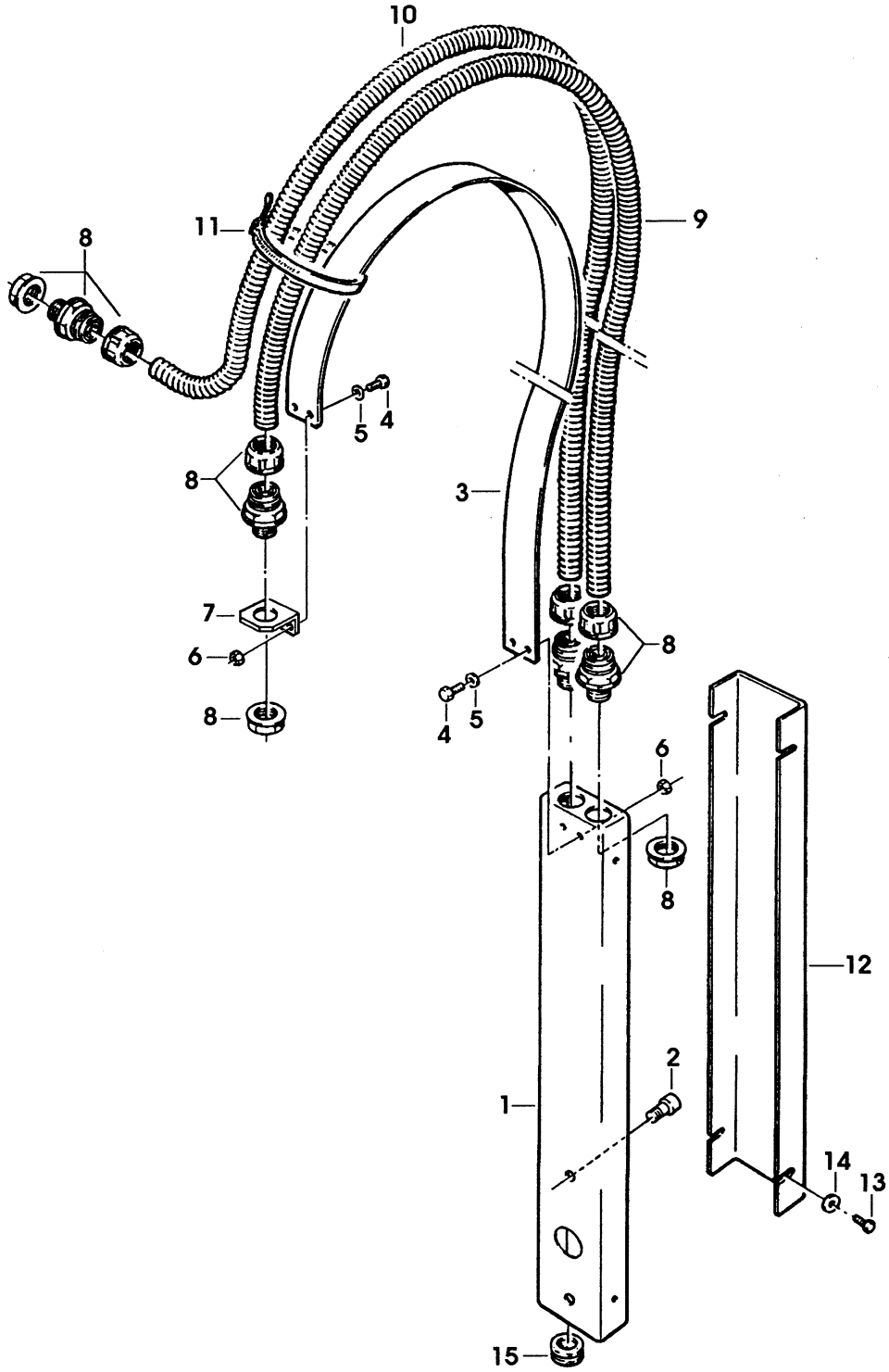
10
11
9
8
5
4
8
3
7
6
8
8
4
5
6
8
12
2
1
14
13
15

Figura	Descrizione figura	Magaz.	Prodotto	Descrizione
8522	IMPIANTO ELETTRICO	0	7.8.04892.98A	INOX NASTRATRICE

Posizione	Ricambio	Descrizione	U.M.	Quantita'
1	4.7.07515	INTERRUTT.ASS.2,5:4 AMP.3F SM2/SM4-P	PZ	1
2	4.7.07517	INTERRUTT.ASS.1,6:2,5 AMP.3F SM2/94-P SM4/94-P	PZ	1
3	4.7.07518	INTERRUTT.ASS.1,0:1,6 AMP.3F SM2/SM4-P	PZ	1
4	4.7.07519	INTERRUTT.ASS.6,3:10 AMP.MF SM2/94-P SM4/94-P	PZ	1
5	4.7.07521	INTERRUTT.ASS.2,5:4 AMP.MF SM2/SM4-P	PZ	1
6	4.7.11436.00A	INTERR.ASS.200-220V 50/60HZ 3F SM2/SM4-P "ALLEN BRADLEY"	PZ	1
7	4.7.11437.00A	INTERR.ASS.240V 50MZ 3F SM2/SM4-P "ALLEN BRADLEY"	PZ	1
8	4.7.11438.00A	INTERR.ASS.380V 50HZ 440V 60HZ 3F SM2/SM4-P "ALLEN BRADLEY"	PZ	1
9	4.7.11439.00A	INTERR.ASS.415/440V 50HZ 3F SM2/SM4-P "ALLEN BRADLEY"	PZ	1
10	4.7.11440.00A	INTERR.ASS.100V 50/60HZ 110 115V 60HZ MF SM2/SM4-P A.B.	PZ	1
11	4.7.11441.00A	INTERR.ASS.220V 50/60HZ 230V 50HZ MF SM2/SM4-P ALLEN BRAD.	PZ	1
12	4.7.11442.00A	INTERR.ASS.240V 50HZ MF SM2/SM4-P "ALLEN BRADLEY"	PZ	1
13	4.7.11461.00A	INTERR.ASS.200-220V 50/60HZ 240V 50HZ 3F SM2/SM4-P SIEMENS	PZ	1
14	4.7.11462.00A	INTERR.ASS.380/415V 50HZ 440V 60HZ 3F SM2/SM4-P SIEMENS	PZ	1
15	4.7.11463.00A	INTERR.ASS.440V 50HZ 3F SM2/SM4-P SIEMENS	PZ	1
16	4.7.11464.00A	INTERR.ASS.100V 50/60HZ 110/115V 60HZ MF SM2/SM4 SIEM.	PZ	1
17	4.7.11465.00A	INTERR.ASS.220V 50/60HZ 230/ 240V 50HZ MF SM2/SM4-P SIEMENS	PZ	1
18	3.8.02199	CASSETTA IP55	PZ	1
19	3.8.03660	CUSTODIA KT3-25-KAZ IP55	PZ	1
20	3.8.05125	CUSTODIA ISOLANTE 3ZV1913-1A S00 IP55 SIEMENS	PZ	1
21	3.2.06076.98C	SUPPORTO INTERRUTTORE INOX SERIE SM	PZ	1
22	3.4.00012.98	VITE TCBCR M4X10 INOX	PZ	2
23	3.4.00016.98	VITE TCEI M4X20 INOX	PZ	2
24	3.4.00130.98	VITE TSVEI M4X15 INOX	PZ	2
25	3.4.00039.98	RONDELLA TRIPLA X VITE M4 INOX	PZ	2
26	3.4.00298.98	DADO AUTOBLOCC.M4 INOX	PZ	2
27	3.8.02196	INTERRUTT.MAGNETOTERMICO MS25 2,5-4	PZ	1
28	3.8.02195	INTERRUTT.MAGNETOTERMICO MS25 1,6-2,5	PZ	1
29	3.8.02198	INTERRUTT.MAGNETOTERMICO MS25 6,3-10	PZ	1
30	3.8.02202	RELE'DI SGANCIO A MINIMA TENS. 200/240V-260V 60Hz	PZ	1

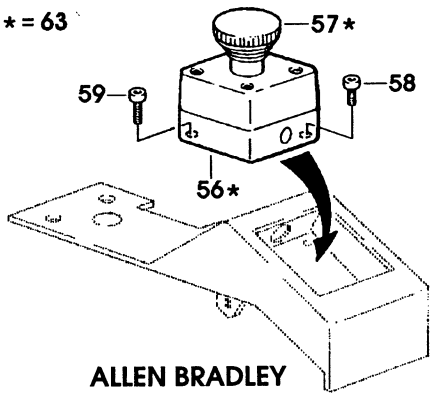
* = 63
57*
59
58
56*
ALLEN BRADLEY

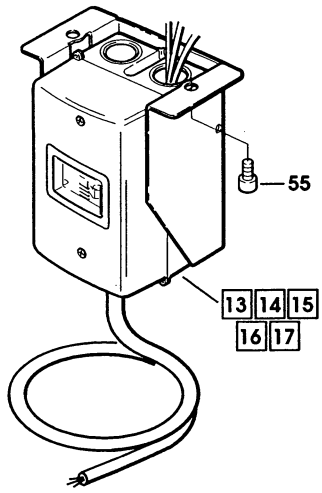
55
13 14 15
16 17

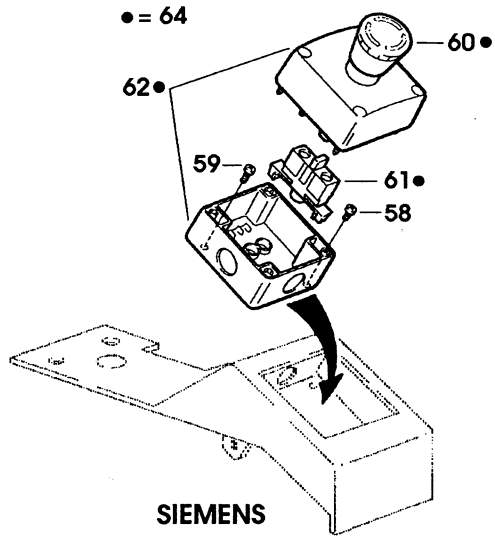
• = 64
60•
62•
59
61•
58
SIEMENS

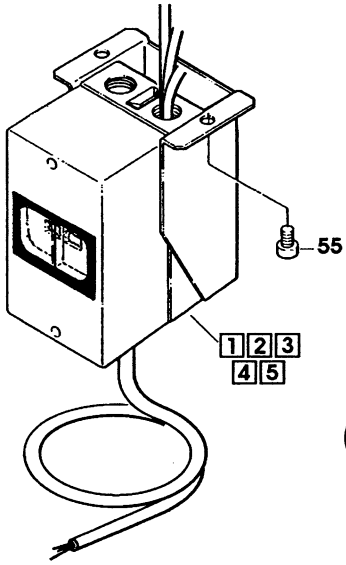
55
1 2 3
4 5

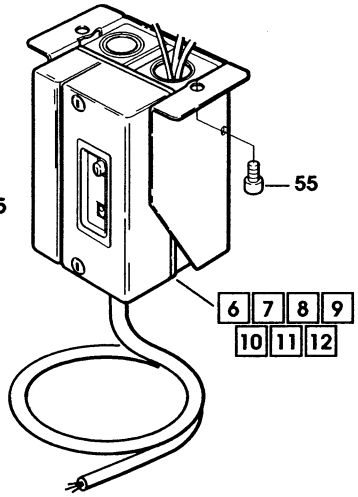
55
6 7 8 9
10 11 12

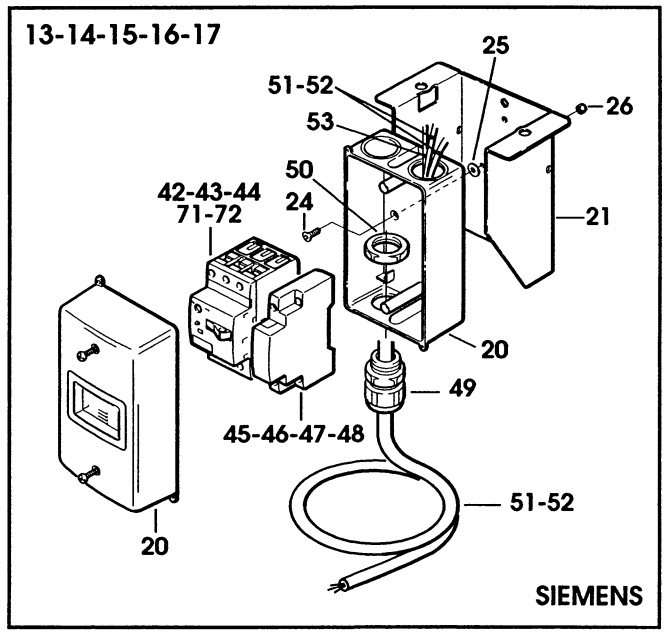
13-14-15-16-17
25
51-52
26
53
50
42-43-44
71-72
24
21
20
49
45-46-47-48
51-52
20
SIEMENS

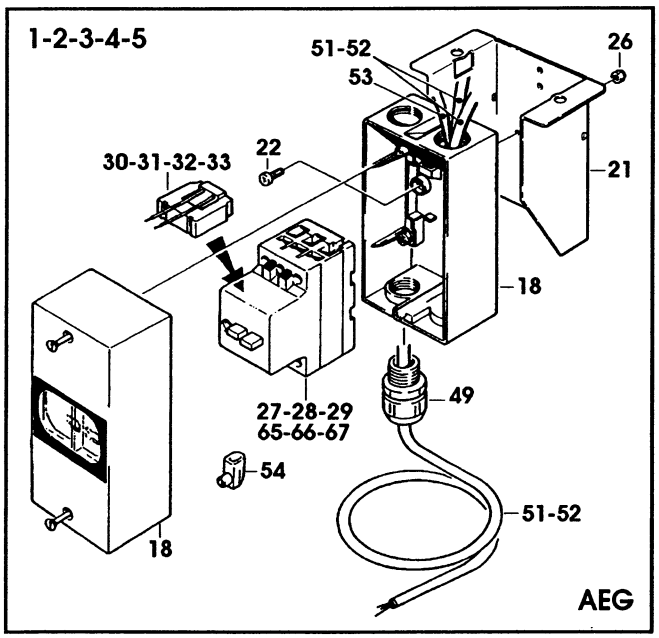
1-2-3-4-5
51-52
26
53
30-31-32-33
22
21
18
27-28-29
65-66-67
49
54
51-52
18
AEG

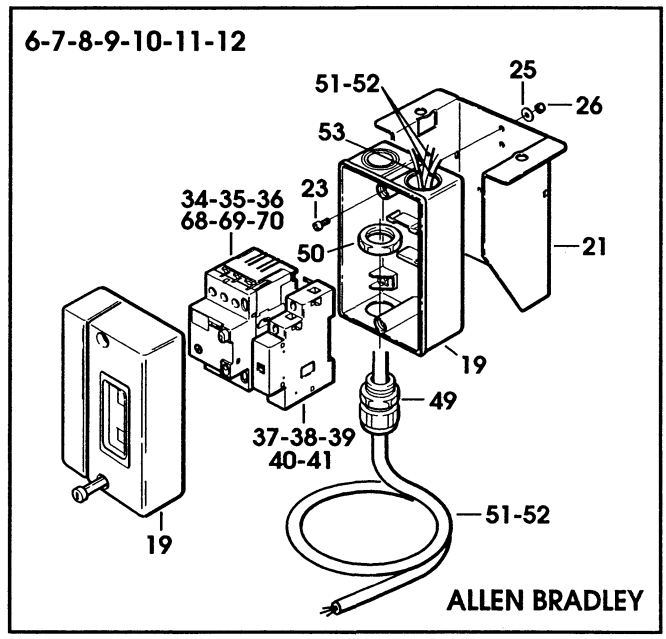
6-7-8-9-10-11-12
51-52
25
26
53
23
34-35-36
68-69-70
50
21
19
49
37-38-39
40-41
51-52
19
ALLEN BRADLEY

Figura	Descrizione figura	Magaz.	Prodotto	Descrizione
8522	IMPIANTO ELETTRICO	0	7.8.04892.98A	INOX NASTRATRICE

Posizione	Ricambio	Descrizione	U.M.	Quantita'
31	3.8.02203	RELE'DI SGANCIO A MINIMA TENS. 380/415V-440V 60Hz	PZ	1
32	3.8.03397	RELE' DI SGANCIO A MINIMA TENSIONE 440V 50Hz SM	PZ	1
33	3.8.02201	RELE'DI SGANCIO A MINIMA TENS. 100/125V	PZ	1
34	3.8.02079	INTERRUTTORE TERMICO KTA 3-25 (2,5-4)	PZ	1
35	3.8.01844	INTERRUTTORE TERMICO KTA 3-25 1,6-2,5A	PZ	1
36	3.8.03758	INTERRUTTORE TERMICO KTA3-25 (6,3-10) SA2 SR4	PZ	1
37	3.8.03662	BOBINA DI MINIMA KT3-25UA 220V SIAT 2000	PZ	1
38	3.8.05110	BOBINA DI MINIMA KT3-25UA 240V ART.140-UV-T	PZ	1
39	3.8.03663	BOBINA DI MINIMA KT3-25UA 380V SIAT 2000	PZ	1
40	3.8.05111	BOBINA DI MINIMA KT3-25UA 415V ART.140-UV-B	PZ	1
41	3.8.03661	BOBINA DI MINIMA KT3-25UA 110V	PZ	1
42	3.8.05118	INTERR.AUT. 3RV1011-1DA10 S00 2.2-3.2 100KA SIEMENS	PZ	1
43	3.8.05117	INTERR.AUT. 3RV1011-1BA10 S00 1.4-2A 100KA SIEMENS	PZ	1
44	3.8.05120	INTERR.AUT. 3RV1011-1HA10 S00 5.5-8A 100KA SIEMENS	PZ	1
45	3.8.05122	BOBINA DI MINIMA TENSIONE 230V 3RV1902-1AP0 S00 SIEMENS	PZ	1
46	3.8.05123	BOBINA DI MINIMA TENSIONE 400V 3RV1902-1AV0 S00 SIEMENS	PZ	1
47	3.8.05124	BOBINA DI MINIMA TENSIONE 440V 3RV1902-1AV1 S00 SIEMENS	PZ	1
48	3.8.05121	BOBINA DI MINIMA TENSIONE 110V 3RV1902-1AF0 S00 SIEMENS	PZ	1
49	3.8.00854	BOCCHETTONE SKINTOP ST 16	PZ	1
50	3.8.03846	CONTRODADO GMP16	PZ	1
51	3.8.01703	CAVO VIN.4X1,5 MT.5 X 3F	PZ	2
52	3.8.01704	CAVO VIN.3X1,5 MT.5 X MF	PZ	2
53	3.8.02654	CAVO 3X1 C/2 ROSSI + 1 GIALLO/ VERDE (MT.5)	PZ	1
54	3.8.01907	MORSETTO E25 "ELECO"	PZ	1
55	3.4.00584.98	VITE TCEI M8X16 INOX	PZ	2
56	3.8.02110	CUSTODIA IN PLASTICA GIALLA 800E-1PY, E-STOP	PZ	1
57	3.8.05094	PULSANTE EMERGENZA /40 800EM-M T-S44-3LX01	PZ	1
58	3.4.00390.98	VITE TCEI M4X12 INOX	PZ	1
59	3.4.00091.98	VITE TCEI M4X15 INOX	PZ	1
60	3.8.05198	PULSANTE EMERG. 3SB3000-1HA20	PZ	1
61	3.8.05197	CONTATTO NC 3SB3420-0C	PZ	1
62	3.8.05196	SCATOLA GIALLA 3SB3801-0AC	PZ	1
63	4.7.11690.00A	PULSANTE EMERGENZA ASS.SM/XL "ALLEN BRADLEY"	PZ	1

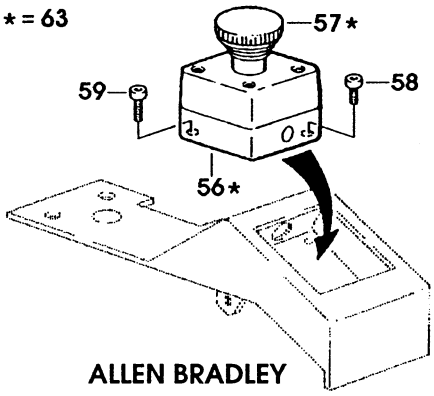

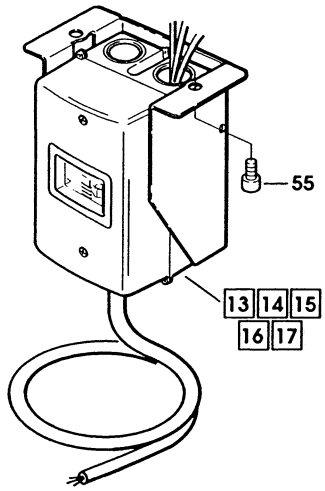

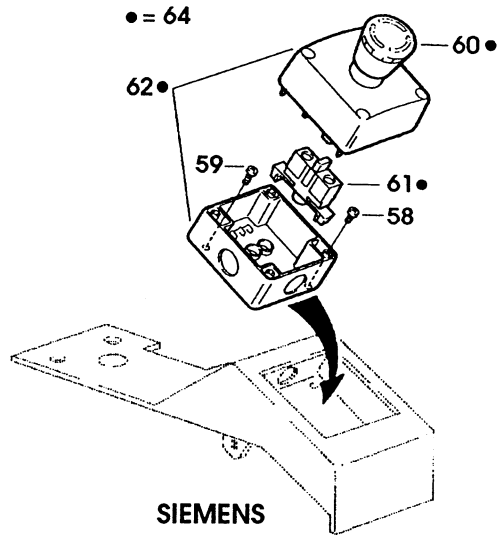

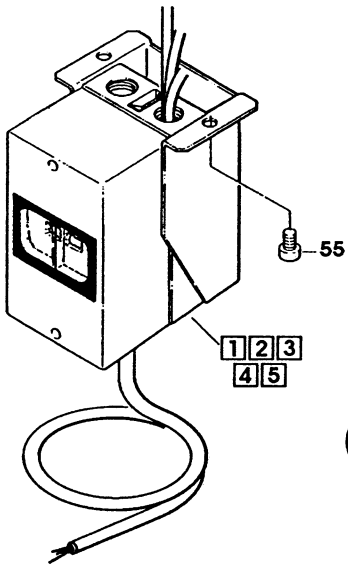

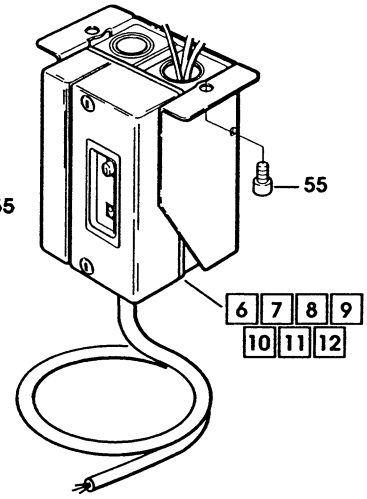

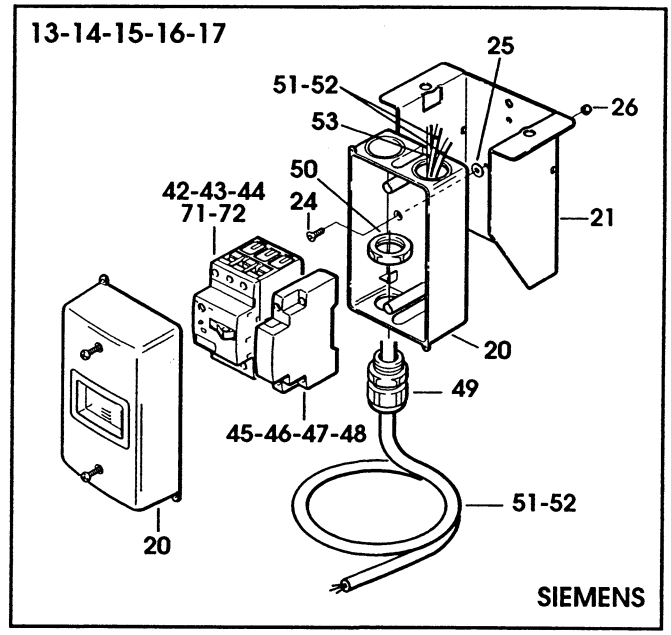

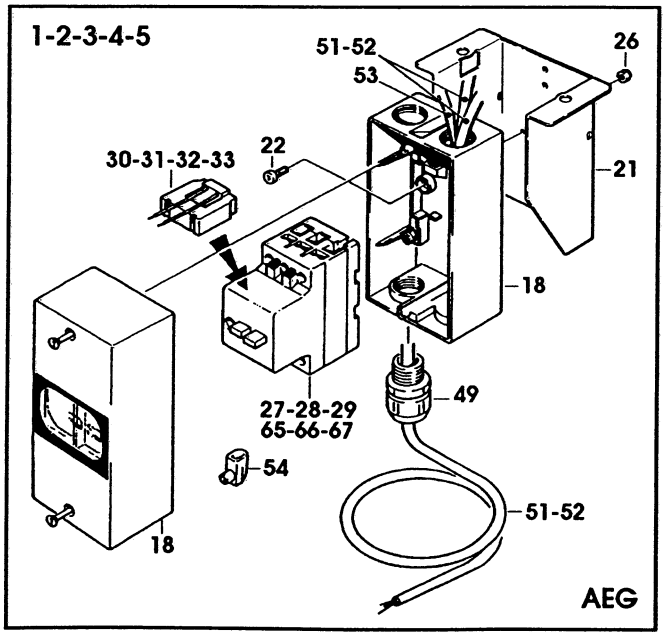

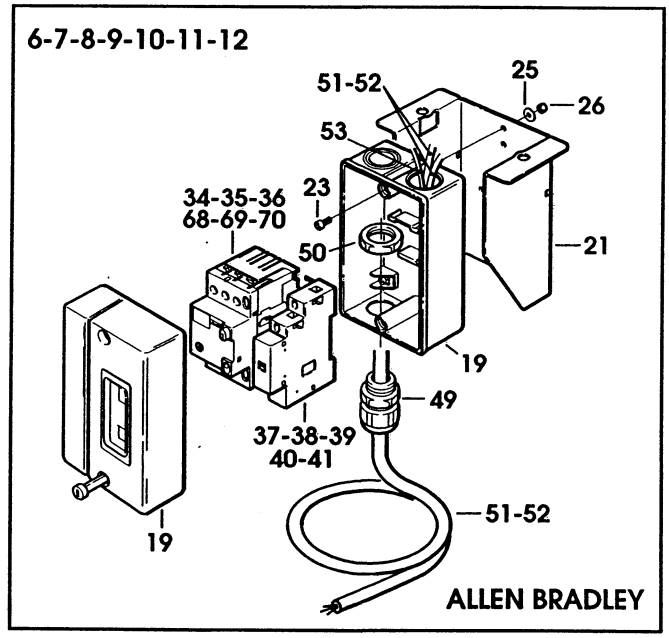

77A-INOX

Ott; 2001

Fig. **8522**

Figura	Descrizione figura	Magaz.	Prodotto	Descrizione
8522	IMPIANTO ELETTRICO	0	7.8.04892.98A	INOX NASTRATRICE

Posizione	Ricambio	Descrizione	U.M.	Quantita'
64	4.7.11689.00A	PULSANTE EMERGENZA ASS.SM/XL "SIEMENS"	PZ	1
65	3.8.02193	INTERRUTT.MAGNETOTERMICO MS25 0,63-1	PZ	1
66	3.8.02194	INTERRUTT.MAGNETOTERMICO MS25 1-1,6	PZ	1
67	3.8.02197	INTERRUTT.MAGNETOTERMICO MS25 4-6,3	PZ	1
68	3.8.01815	INT.TERMICO KTA-3-25 0,63-1A	PZ	1
69	3.8.01830	INTERRUTTORE TERMICO KTA 3-25 1-1,6A	PZ	1
70	3.8.05072	INTERRUTTORE TERMICO -KTA3-25 (4-6,3A)	PZ	1
71	3.8.05116	INTERR.AUT. 3RV1011-0KA10 S00 0.9-1.25A 100KA SIEMENS	PZ	1
72	3.8.05119	INTERR.AUT. 3RV1011-1FA10 S00 3.5-5A 100KA SIEMENS	PZ	1

Data 02/10/2001

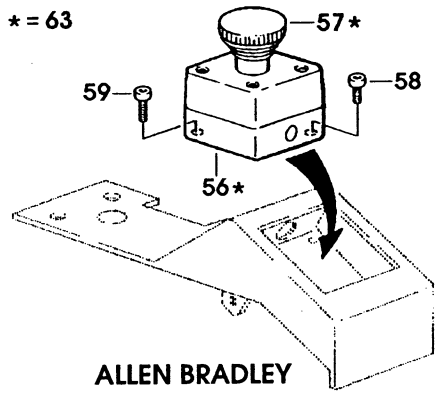
* = 63
57*
59
58
56*
ALLEN BRADLEY

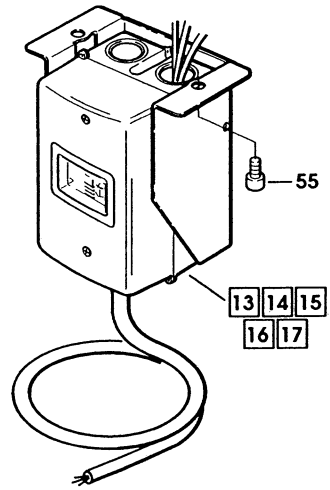
55
13 14 15
16 17

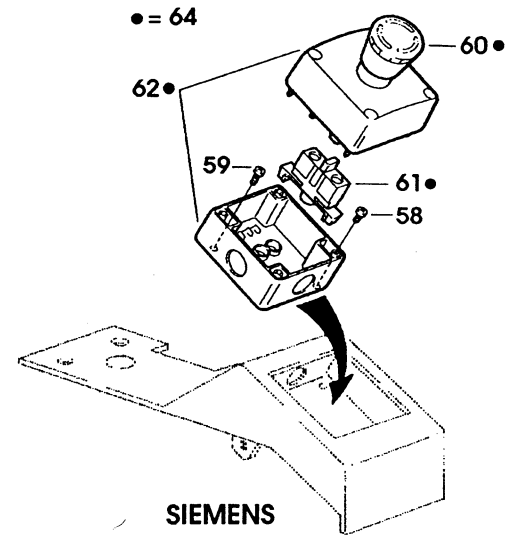
• = 64
60•
62•
59
61•
58
SIEMENS

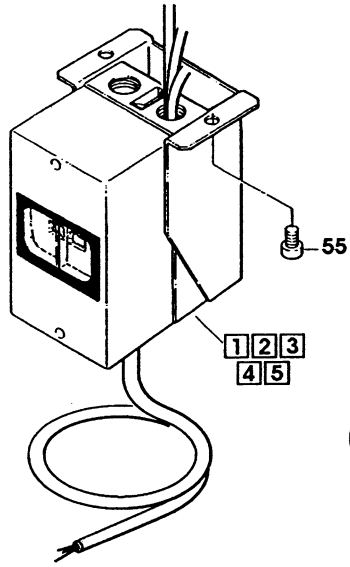
55
1 2 3
4 5

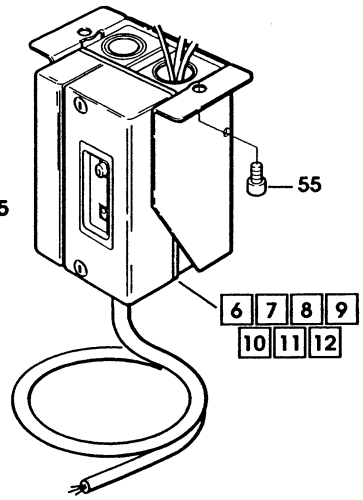
55
6 7 8 9
10 11 12

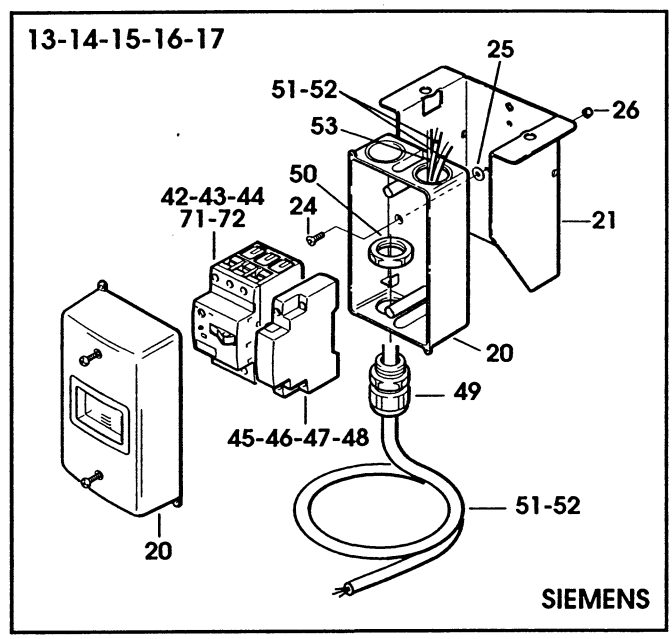
13-14-15-16-17
25
51-52
26
53
50
42-43-44
71-72
24
21
20
49
45-46-47-48
51-52
20
SIEMENS

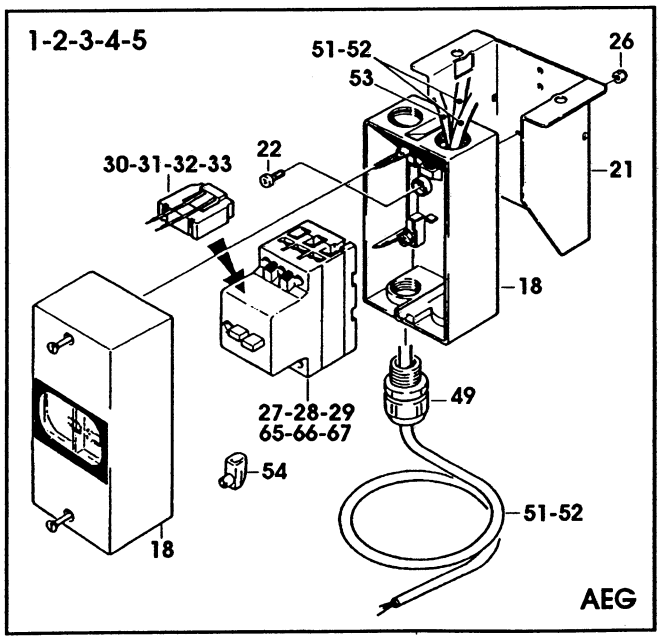
1-2-3-4-5
51-52
26
53
22
30-31-32-33
21
18
27-28-29
65-66-67
49
54
51-52
18
AEG

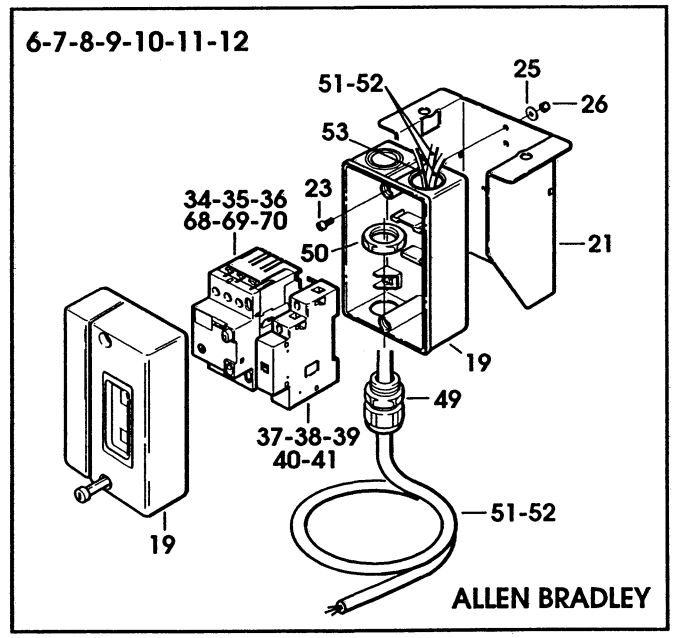
6-7-8-9-10-11-12
51-52
25
26
53
23
34-35-36
68-69-70
50
21
19
49
37-38-39
40-41
51-52
19
ALLEN BRADLEY

THIS PAGE IS BLANK

Parts List

3M-Matic™

AccuGlide™

SST

Taping Heads

Model 18900

3M Packaging Systems Division

3M Center Bldg. 220-8W-01
St. Paul, MN 55144-1000

THIS PAGE IS BLANK

To Our Customers:

This is the "3M-Matic"/"AccuGlide"/"Scotch"/"Opta-Pak" brand Equipment you ordered. It has been set up and tested in the factory with "Scotch" Brand tapes. If any problems occur when operating this equipment, and you desire a service call, or phone consultation, call the 3M National Service Center on 1-800/328 1390 (Twin Cities Metro Area call 731 6507). Please provide the customer support coordinator with the machine catalog number and serial number. If you have a technical question that does not require an immediate response, you may Fax it to 612/731 6650.

Replacement Parts

Order parts by **part number, part name,** quantity required, **machine name, number** and **model number.**

Replacement parts and parts prices available from:

Dispenser Parts
Route 4, Box 5B
Amery, WI 54001
715/268 8126 (WI)
800/344 9883 (Outside WI)
FAX# 715/268 8153

34-7004-7364-7(G201)R2 XY

"3M-Matic," "AccuGlide," "Scotch" and "Opta-Pak" are trademarks of 3M, St. Paul, MN 55144-1000

Litho in U.S.A.

3M Packaging Systems Division
3M Center Bldg. 220-8W-01
St. Paul, MN 55144-1000

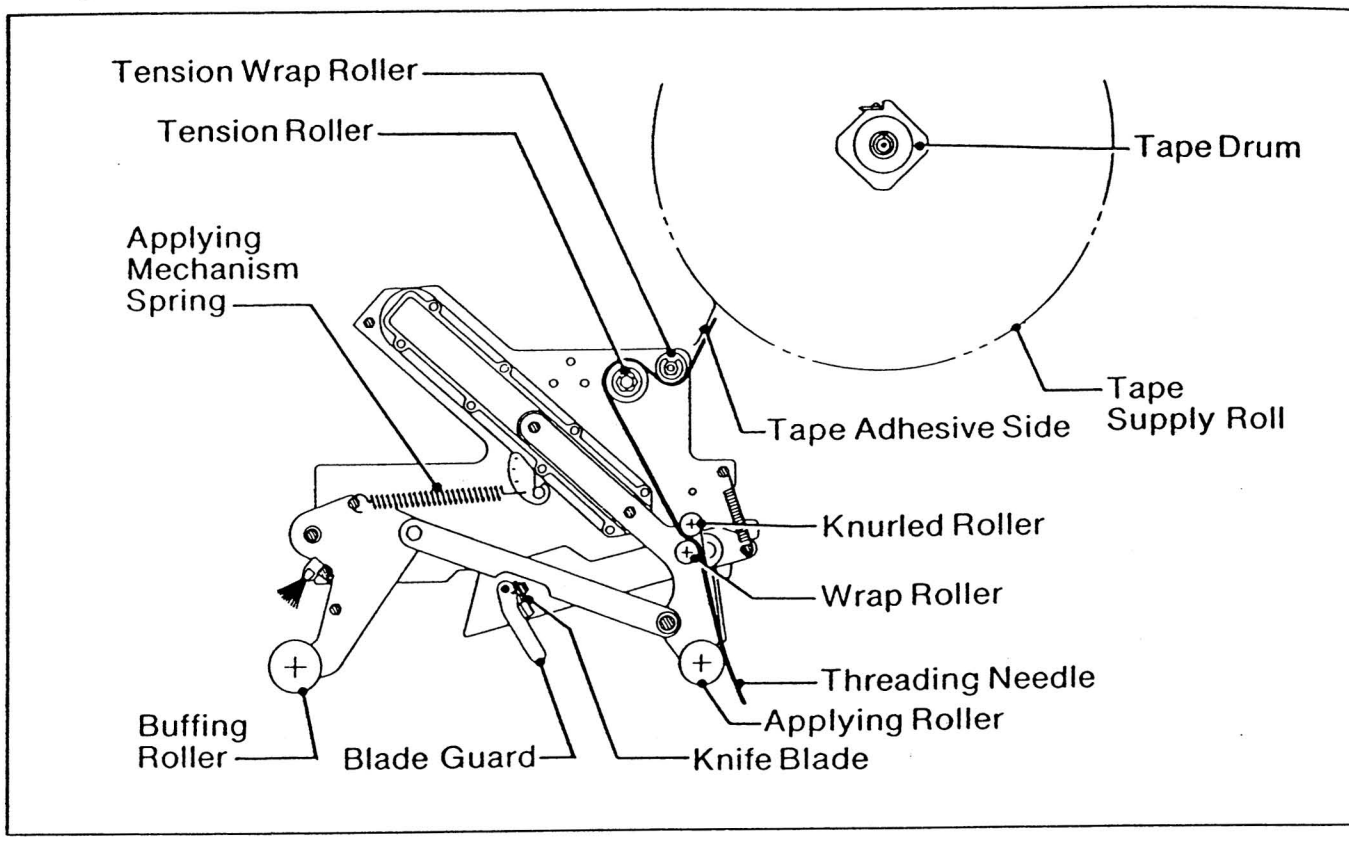

Figure 3 - Tape Threading Diagram - Top Taping Head - Left Side View

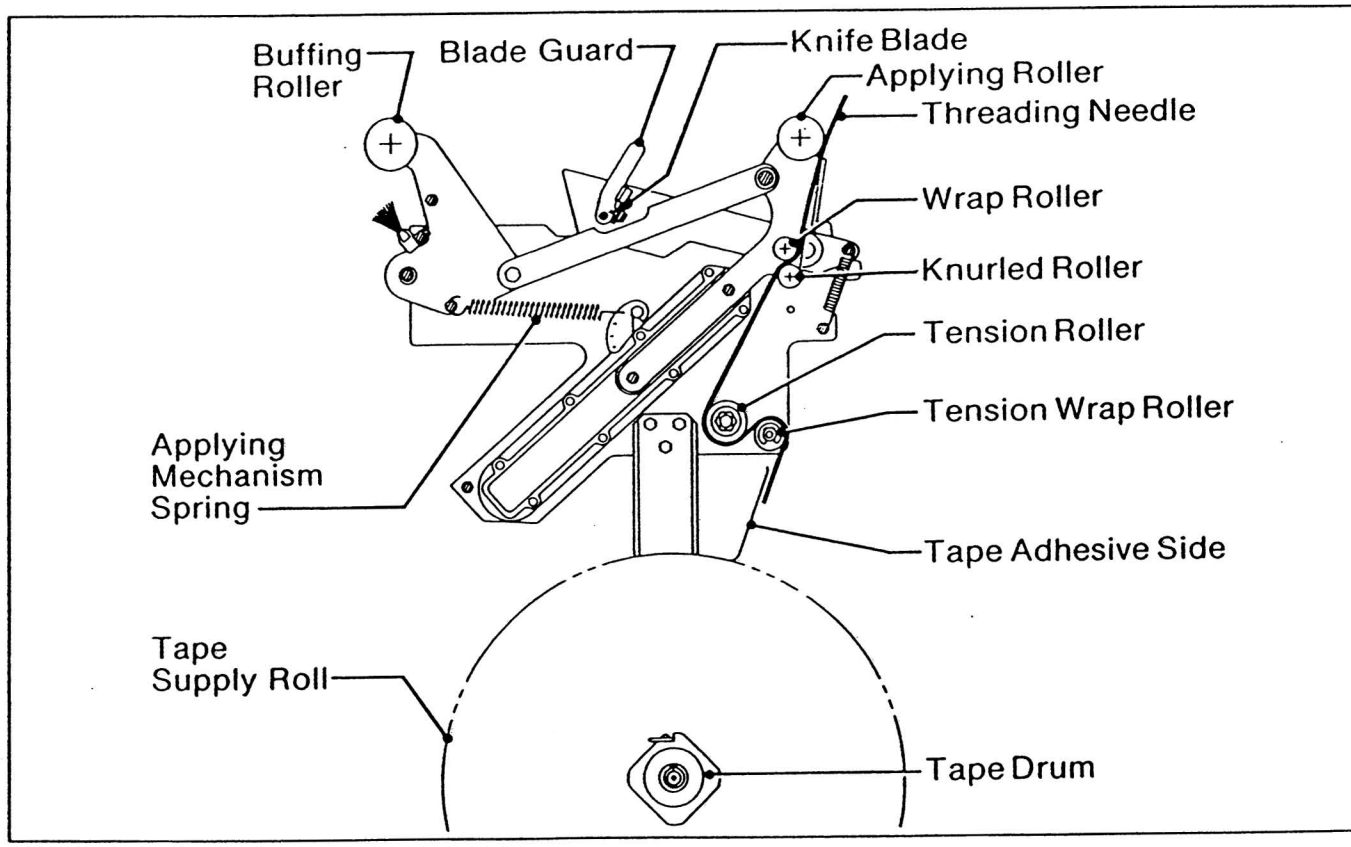

Figure 3A - Tape Threading Diagram - Bottom Taping Head - Left Side View

Set-Up Procedure (Continued)

3. For subsequent tape loading operations, use the red plastic threading needle and follow the loading procedures from Figure 3B to complete the tape threading.

Tape Loading - Bottom Taping Head
Refer to Figure 3A

The bottom taping head is loaded and threaded in the same manner as the top taping head.
For ease in loading, first remove the bottom taping head from the conveyor bed and follow the top taping head tape loading procedure.

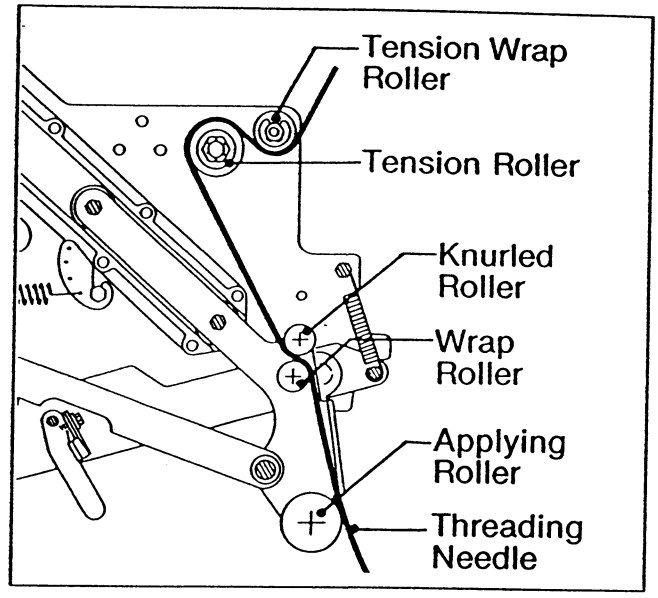

Figure 3B

Figure 3B

Insert the red plastic needle **downward** around rollers as illustrated.

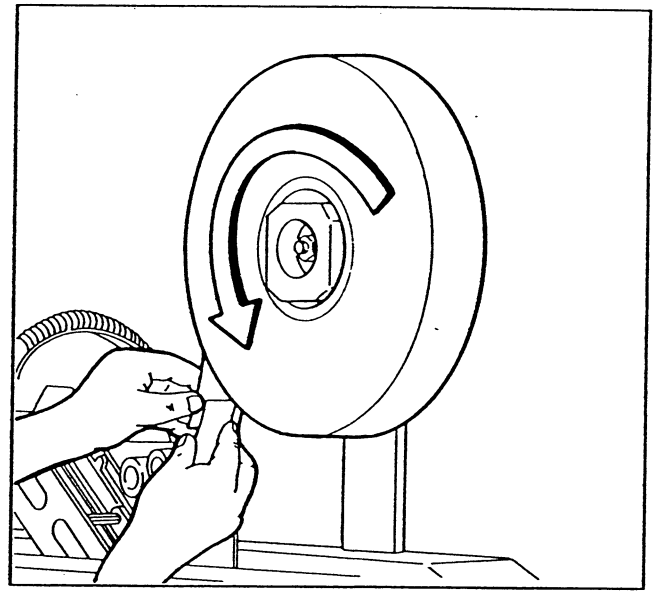

Figure 3C

Figures 3B and 3C

Place tape roll on drum to **dispense tape from bottom of roll** toward tension wrap roller with tape **adhesive side in.** Seat tape roll fully against back flange of drum. Adhere tape lead end to upper end of threading needle as shown.

Figure 3D

WARNING - USE CARE WHEN WORKING NEAR BLADES AS BLADES ARE EXTREMELY SHARP. IF CARE IS NOT TAKEN, SEVERE INJURY TO PERSONNEL COULD RESULT.

Manually turn tape roll to create slack tape while pulling threading needle through tape applying mechanism until needle is through and tape is in alignment with applying roller.

Excess tape can be cut with a scissors or knife at applying roller.

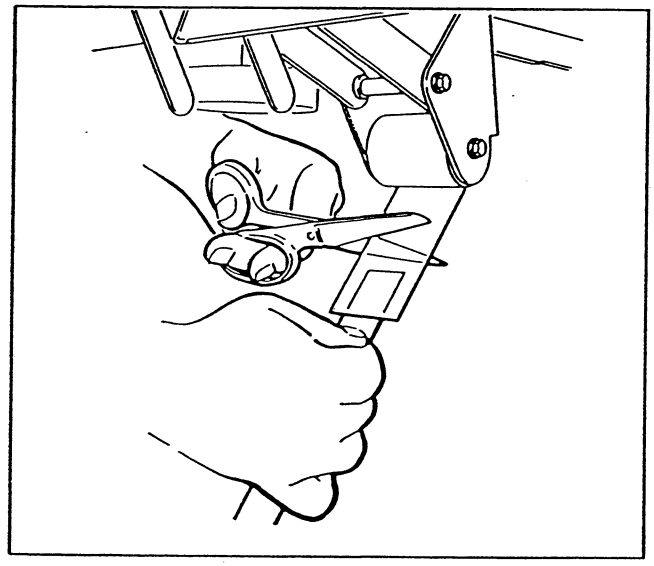

Figure 3D

Adjustments

Tape Web Alignment

Refer to Figure 9

The tape drum assembly on each taping head is pre-set to accommodate 2 inch [50 mm] wide tape, but is adjustable to provide alignment of narrower tapes. If adjustment is necessary to center the tape width on the centerline of the taping head (and therefore box center seam), make adjustment as follows:

1. Loosen hand knob behind tape drum on tape drum shaft.

2. **Turn tape drum shaft** in or out to center the tape web.

3. Tighten hand knob to secure the adjustment.

No other components require adjustment for tape web alignment.

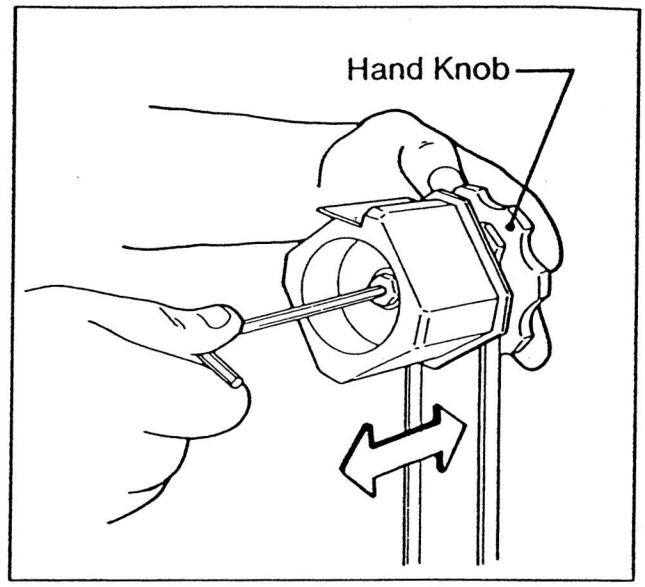

Figure 9

Applying Mechanism Spring

The applying mechanism spring, shown in Figure 3A, controls applying and buffing roller pressure on the box and returns the mechanism to the reset position. The spring pressure is pre-set, as shown in Figure 10, for normal operation but is adjustable.

Removing the spring end loop from the spring holder and placing loop in other holes provided, as shown in Figure 11, **will decrease the spring pressure.**

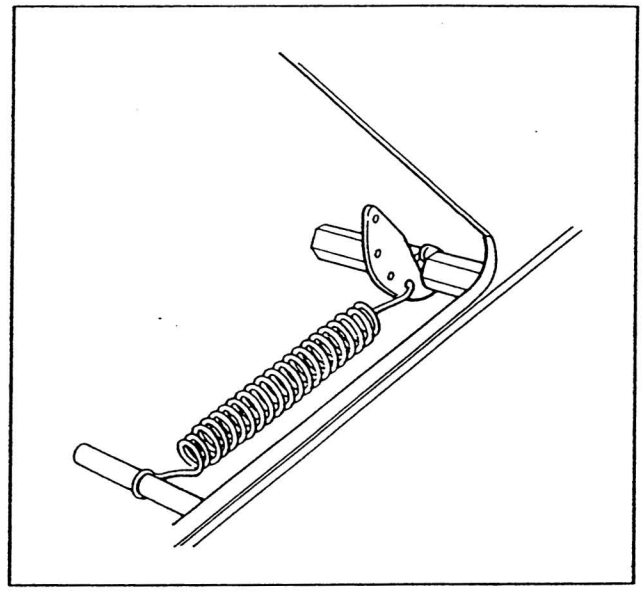

Figure 10

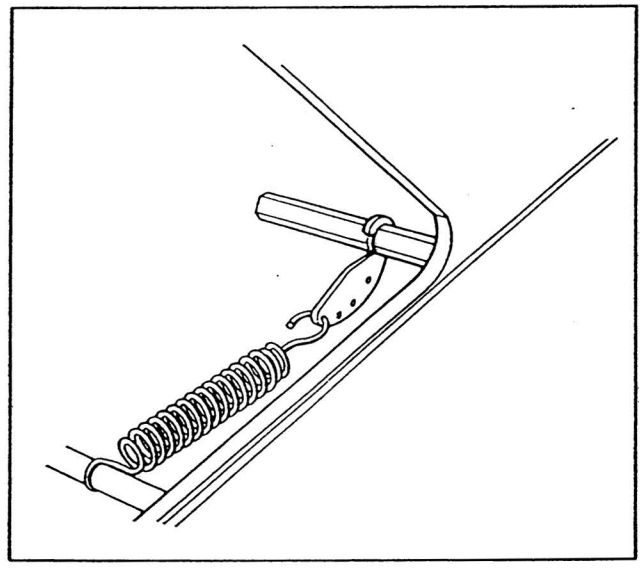

Figure 11

Adjustments (Continued)

One Way Tension Roller Assembly

The one way tension roller, shown in Figure 3A, is pre-set for normal operation. Should the one way tension roller assembly require replacement, the roller must have 1 pound [0,5 kg] tangential force when turning as illustrated in Figure 12.

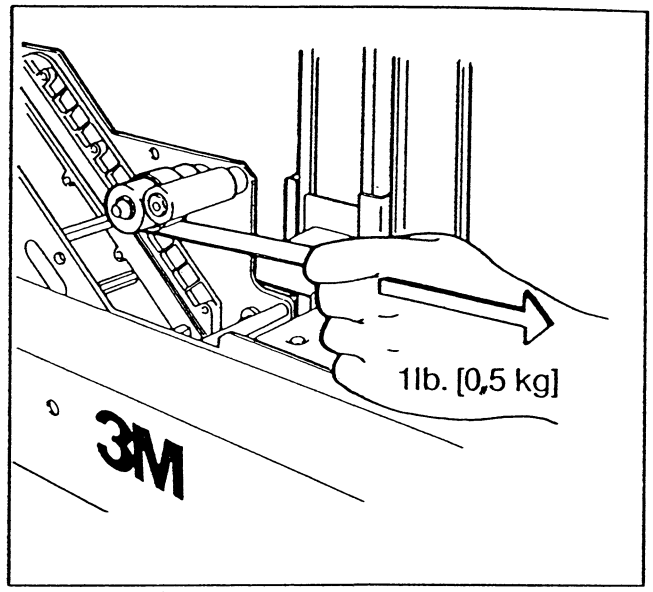

Figure 12

THIS PAGE IS BLANK

1. Refer to Taping Head Assemblies figure to find all the parts illustrations identified by figure numbers.

2. Refer to the figure or figures to determine the individual parts required and the parts reference number.

3 . The replacement parts list, that follows each illustration, includes the part number and part description for the parts in that illustration.

Note – The complete description has been included for standard fasteners and some commercially available components. This has been done to allow obtaining these standard parts locally, should the customer elect to do so.

4. Refer to page 19 – "Replacement Parts and Service Information" of this manual for replacement parts ordering information.

THIS PAGE IS BLANK

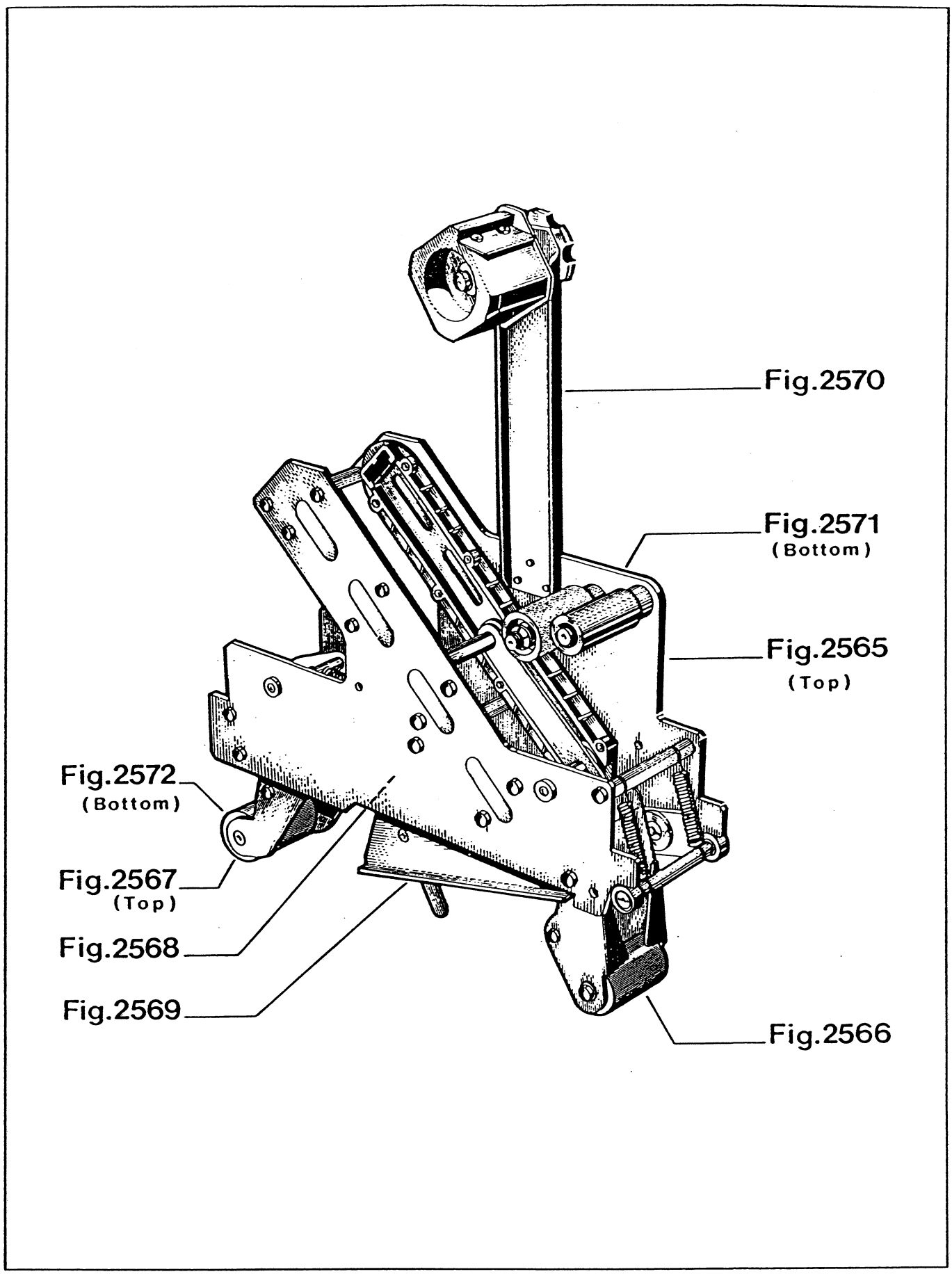

Taping Head Assemblies

Figure 2565

Ref. No.	3M Part No.	Description
2565-1	78-8060-8209-1	Frame Assembly - Right
2565-2	78-8060-8212-5	Frame Assembly - Left
2565-3	78-8060-8189-5	Frame - Right/Top
2565-4	78-8060-8191-1	Frame - Left/Top
2565-5	78-8060-8208-3	Guide - W/Nut
2565-6	78-8060-8205-9	Screw - Hex Hd M4 x 14
2565-7	78-8060-8193-7	Spacer - L 90
2565-8	78-8060-8194-5	Spacer - Hex 10 x 90
2565-9	78-8060-8192-9	Spacer - Hex 10 x 90
2565-10	78-8060-8207-5	Brush Assembly
2565-11	78-8060-8200-0	Shaft - Roller
2565-12	78-8060-8202-6	Shaft - Idler Roller
2565-13	78-8060-8204-2	Screw - Hex Hd M6 x 12
2565-14	78-8060-8312-3	Washer - Flat M6
2565-15	78-8052-6565-5	Roller - Top Tension
2565-16	78-8060-8315-6	Washer - Friction
2565-17	78-8060-8354-5	Spring
2565-18	78-8060-8201-8	Nut - M10 x 1 NHT70
2565-19	78-8052-6569-7	Roller - Wrap
2565-20	78-8060-8203-4	Ring - 10DIN6799

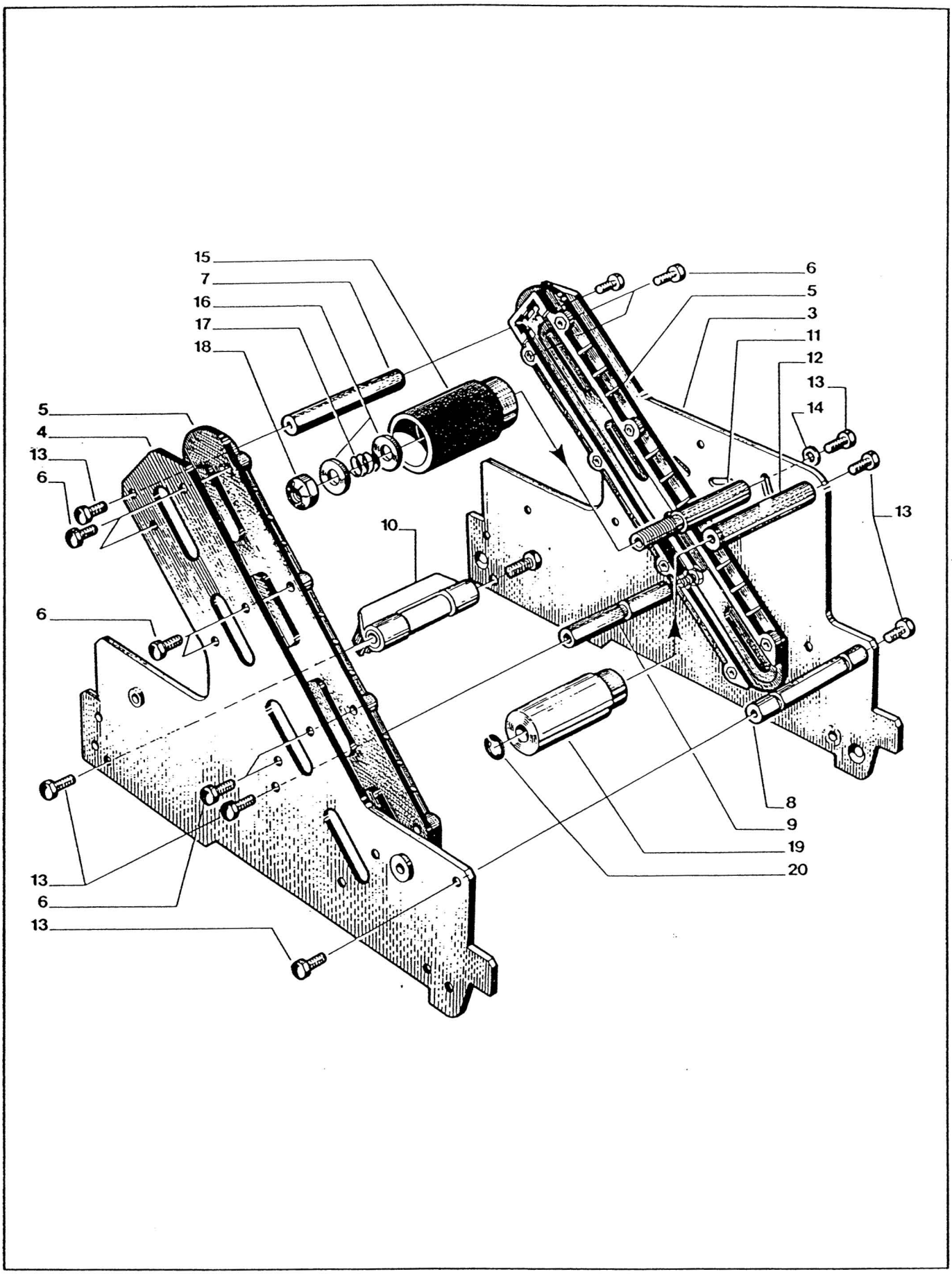

Figure 2565

Figure 2566

Ref. No.	3M Part No.	Description
2566-1	78-8060-8225-7	Entry Gr. Assembly
2566-2	78-8060-8213-3	Shoulder - Entry, Right
2566-3	78-8060-8214-1	Shoulder - Entry, Left
2566-4	78-8060-8215-8	Plate - Entry
2566-5	78-8060-8220-8	Spacer - 10 x 59,5
2566-6	78-8060-8217-4	Shaft - 10 x 60
2566-7	78-8060-8224-0	Roller - Knurled
2566-8	78-8052-6579-6	Roller - Wrap
2566-9	78-8017-9074-8	Washer - Nylon 15 mm
2566-10	78-8060-8315-6	Washer - Friction
2566-11	78-8060-8354-5	Spring
2566-12	78-8060-8395-8	Bushing - Applying Roller
2566-13	78-8057-6179-4	Roller - Applying NM
2566-14	78-8060-8204-2	Screw - Hex Hd M6 x 12
2566-15	78-8060-8223-2	Screw - Flat Hd M6 x 12
2566-16	78-8017-9082-1	Bearing - 30 mm Special
2566-17	78-8060-8241-4	Screw - Bearing Shoulder

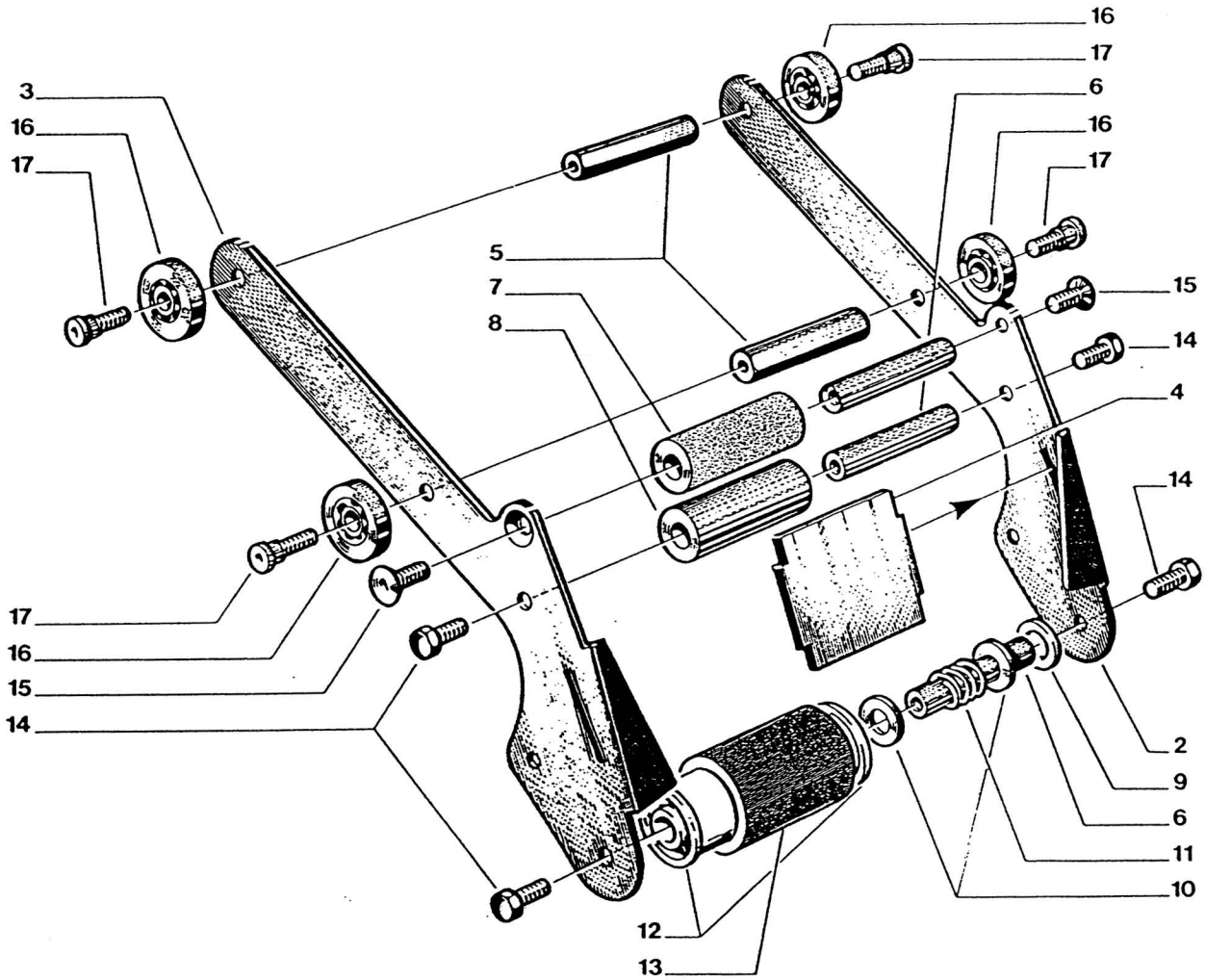

Figure 2566

Figure 2567

Ref. No.	3M Part No.	Description
2567-1	78-8060-8239-8	Exit Gr. Assembly
2567-2	78-8060-8226-5	Shoulder - Exit Right
2567-3	78-8060-8228-1	Shoulder - Exit Left
2567-4	78-8060-8229-9	Spacer - Hex 10 x 60
2567-5	78-8060-8204-2	Screw - Hex Hd M6 x 12
2567-6	78-8060-8217-4	Shaft - 10 x 60
2567-7	78-8052-6586-1	Bushing - Buffing Roller
2567-8	78-8057-6178-6	Roller - Buffing NM
2567-9	78-8060-8223-2	Screw - Flat Hd M6 x 12
2567-10	78-8060-8234-9	Shaft - 10 x 90
2567-11	78-8060-8238-0	Hock - Spring
2567-12	78-8060-8237-2	Spring -Main/Top

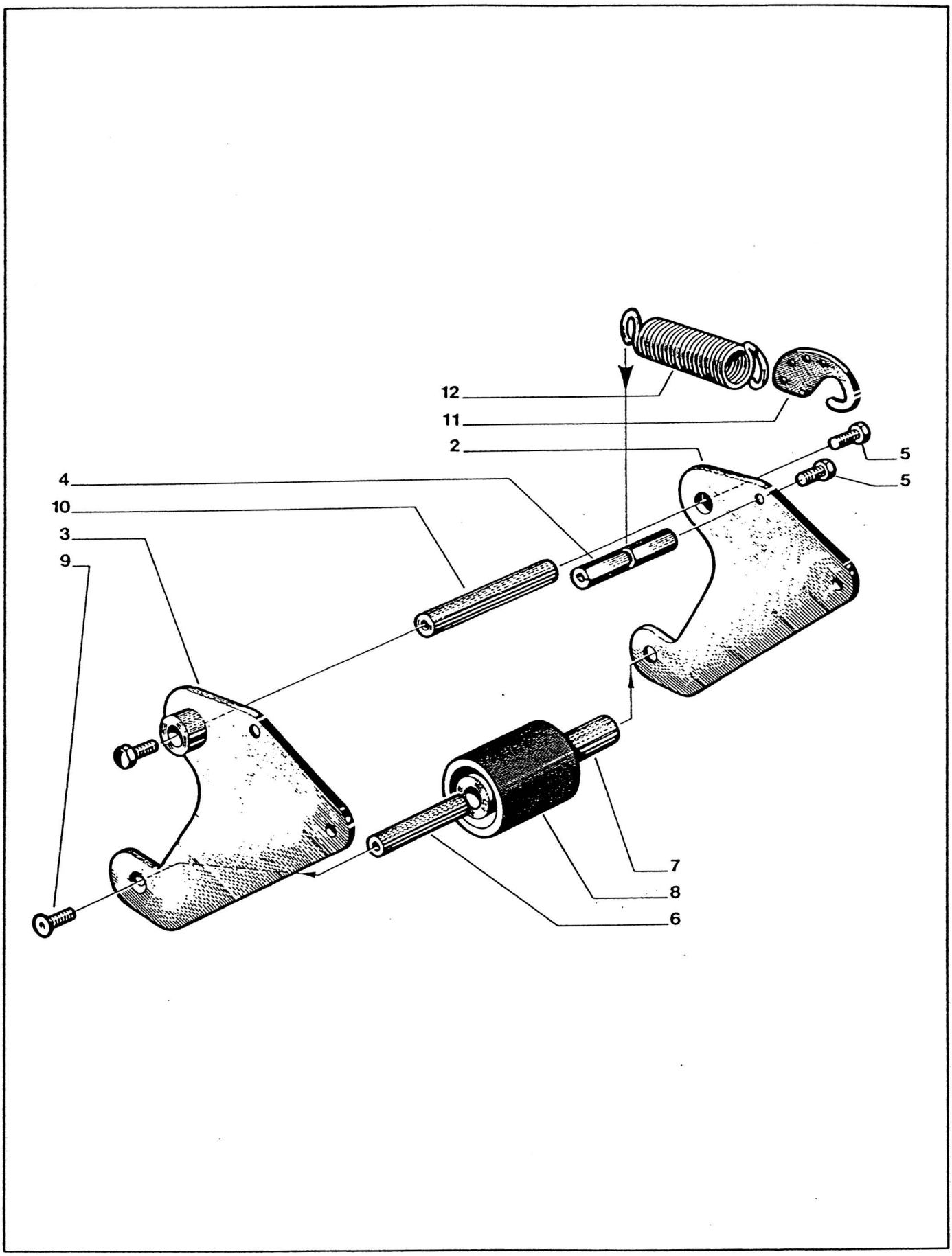

Figure 2567

Figure 2568

Ref. No.	3M Part No.	Description
2568-1	78-8060-8240-6	Lever
2568-2	78-8060-8249-7	Spacer - Lever
2568-3	78-8060-8250-5	Bushing - Lever
2568-4	78-8060-8300-8	Screw - Hex Hd M5 x 10, Metric

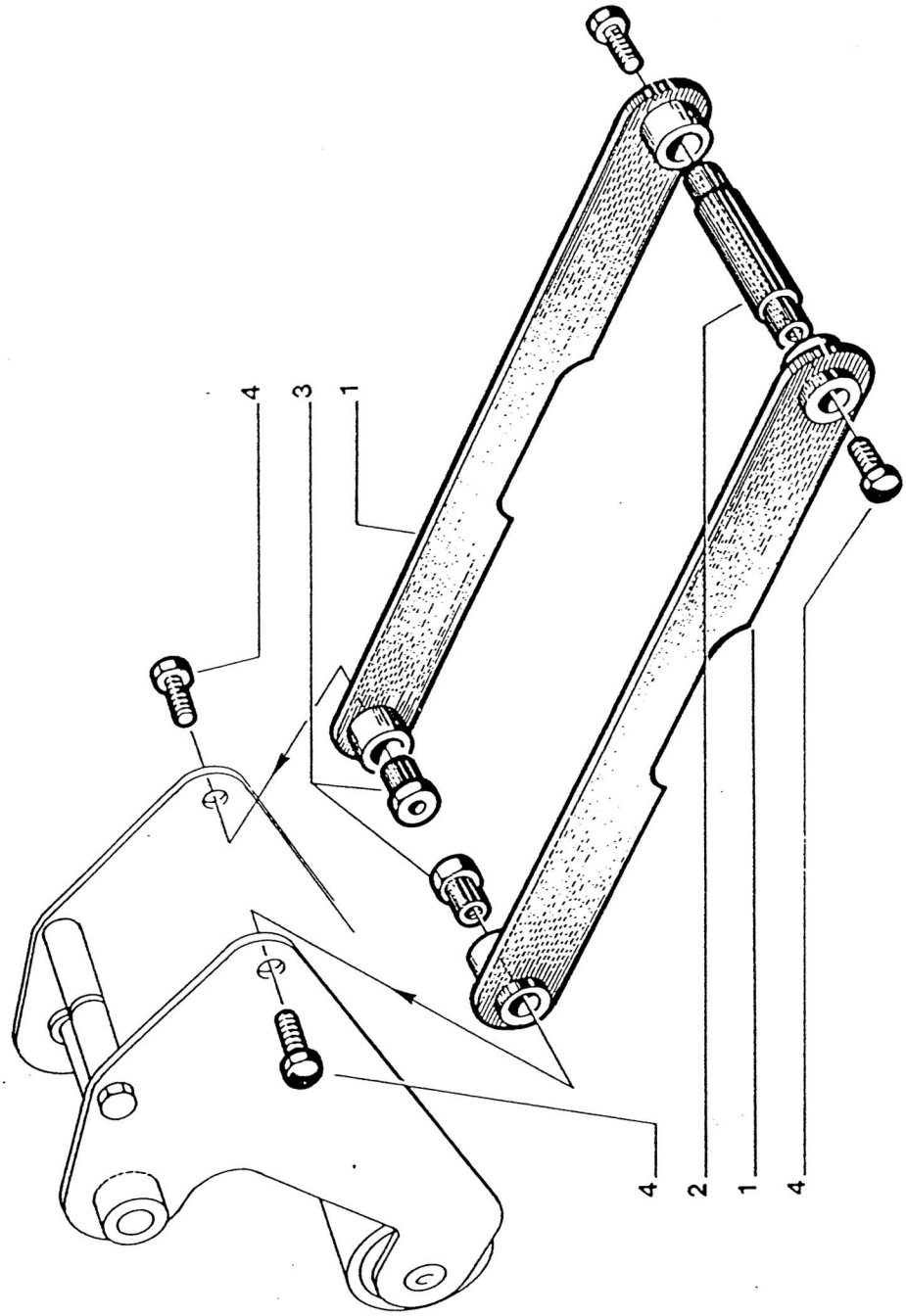

Figure 2568

Figure 2569

Ref. No.	3M Part No.	Description
2569-1	78-8060-8346-1	Cutting Lever Assembly
2569-2	78-8060-8259-6	Lever - Cutting
2569-3	78-8060-8419-6	Blade - 2,56 (65 mm)
2569-4	78-8060-8342-0	Screw - Hex Hd M5 x 8
2569-5	78-8060-8303-2	Washer - Plain M5, Metric
2569-6	78-8060-8265-3	Shaft - Felter 6 x 82
2569-7	78-8060-8275-2	Spring - Felter
2569-8	78-8060-8264-6	Support - Felter
2569-9	78-8060-8341-2	Screw - Flat M4 x 10
2569-10	78-8060-8276-0	Shaft - Spring, Cutting
2569-11	78-8017-9133-2	Spacer
2569-12	78-8060-8286-9	Support - Bumper
2569-13	78-8060-8333-9	Screw - Flat M5 x 20
2569-14	78-8060-8340-4	Spring - Cutting
2569-15	78-8060-8287-7	Spacer
2569-16	78-8060-8204-2	Screw - Hex Hd M6 x 12

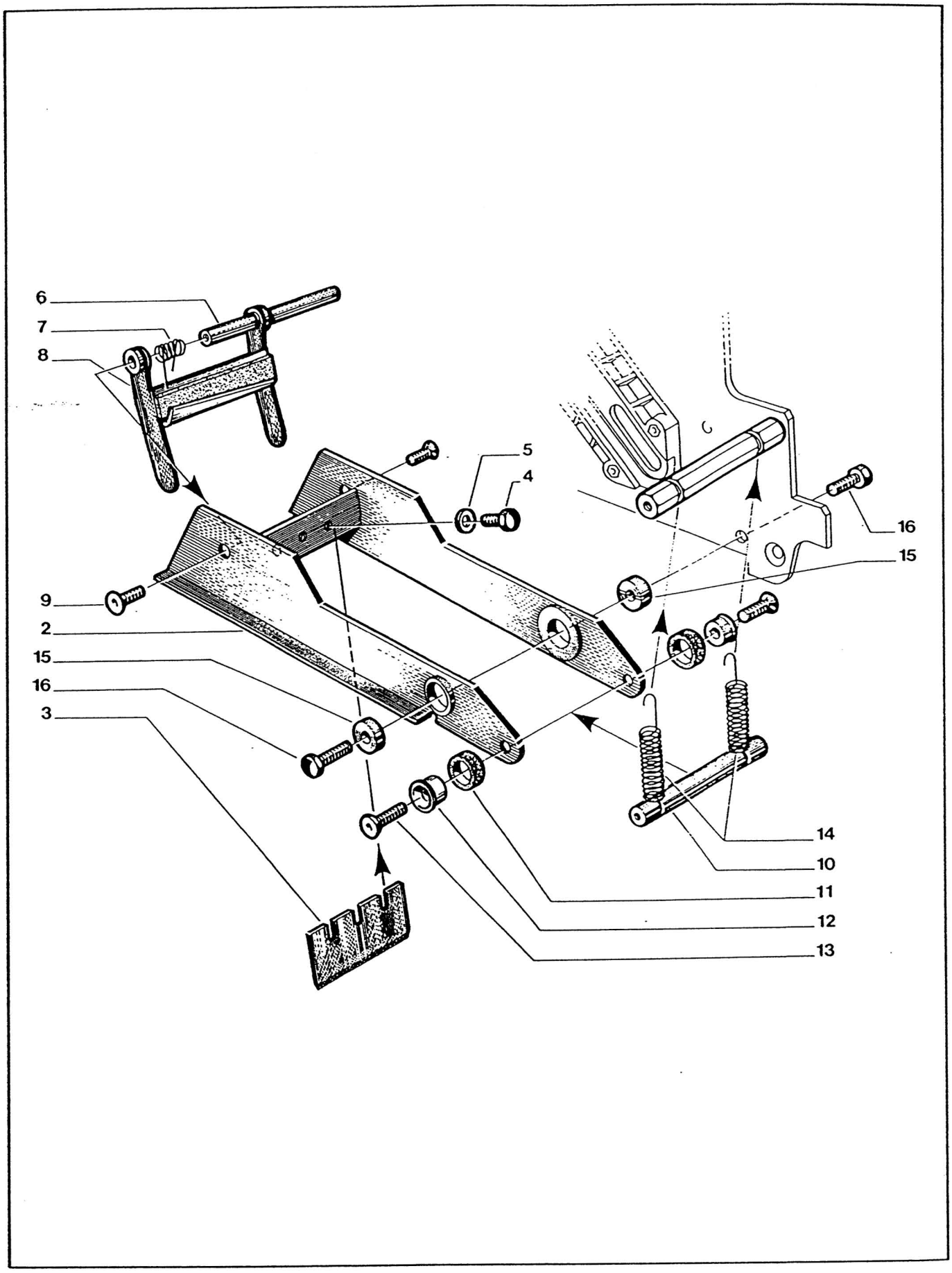

Figure 2569

Figure 2570

Ref. No.	3M Part No.	Description
2570-1	78-8060-8377-6	Coreholder Assembly
2570-2	78-8060-8347-9	Bracket
2570-3	78-8060-8350-3	Shaft - Coreholder
2570-4	78-8060-8349-5	Ring Nut
2570-5	78-8052-6749-5	Tape Drum Assembly
2570-6	78-8060-8364-4	Washer - Coreholder
2570-7	78-8060-8376-8	Ring - /14
2570-8	78-8060-8362-8	Spatula - Coreholder
2570-9	78-8060-8337-0	Screw - Self Tapping
2570-10	78-8060-8204-2	Screw - Hex Hd M6 x 12
2570-11	78-8060-8312-3	Washer - Flat M6

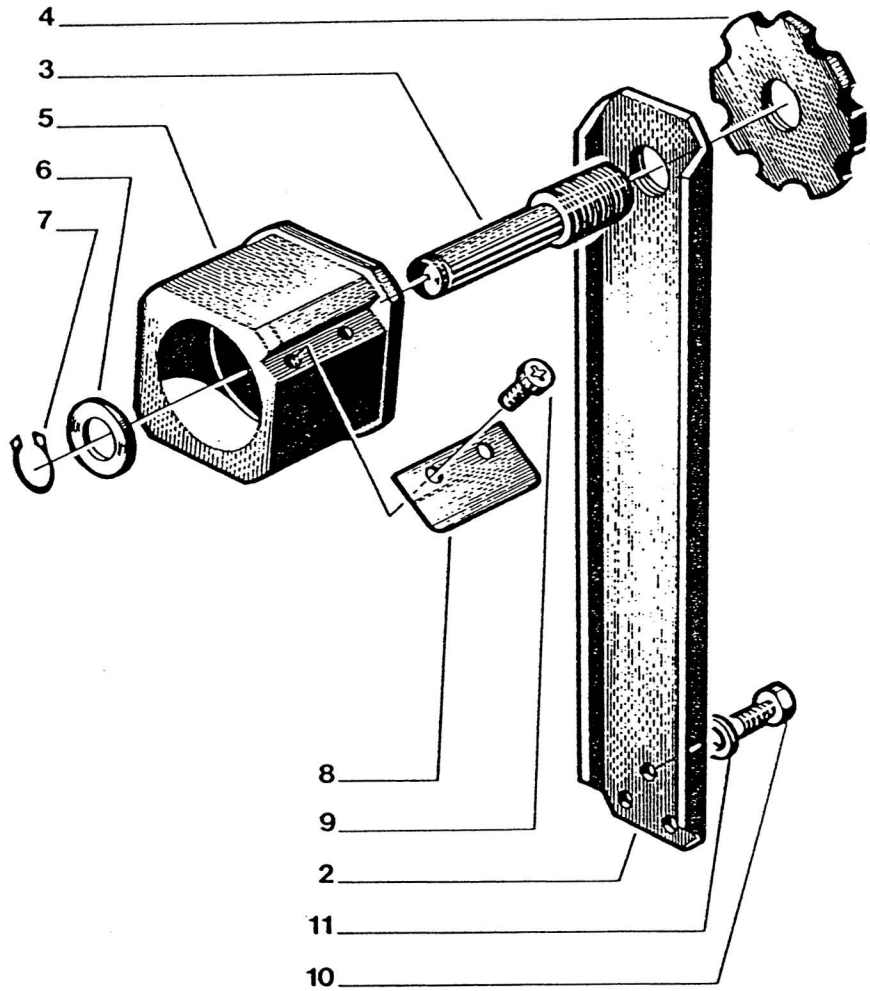

Figure 2570

Figure 2571

Ref. No.	3M Part No.	Description
2571-1	78-8060-8392-5	Frame Assembly - Right
2571-2	78-8060-8393-3	Frame Assembly - Left
2571-3	78-8060-8390-9	Frame - Right/Bottom
2571-4	78-8060-8378-4	Frame - Left/Bottom
2571-5	78-8060-8208-3	Guide - W/Nut
2571-6	78-8060-8205-9	Screw - Hex Hd M4 x 14
2571-7	78-8060-8193-7	Spacer - L90
2571-8	78-8060-8194-5	Spacer - Hex 10 x 90
2571-9	78-8060-8192-9	Spacer - Hex 10 x 90
2571-10	78-8060-8207-5	Brush Assembly
2571-11	78-8060-8200-0	Shaft - Roller
2571-12	78-8060-8202-6	Shaft - Idler Roller
2571-13	78-8060-8204-2	Screw - Hex Hd M6 x 12
2571-14	78-8060-8312-3	Washer - Flat M6
2571-15	78-8052-6606-7	Roller - Tension Bottom
2571-16	78-8060-8315-6	Washer - Friction
2571-17	78-8060-8354-5	Spring
2571-18	78-8060-8201-8	Nut - M10 x 1 NHT70
2571-19	78-8052-6569-7	Roller - Wrap
2571-20	26-1000-1613-3	Ring - Retaining 10DIN6799

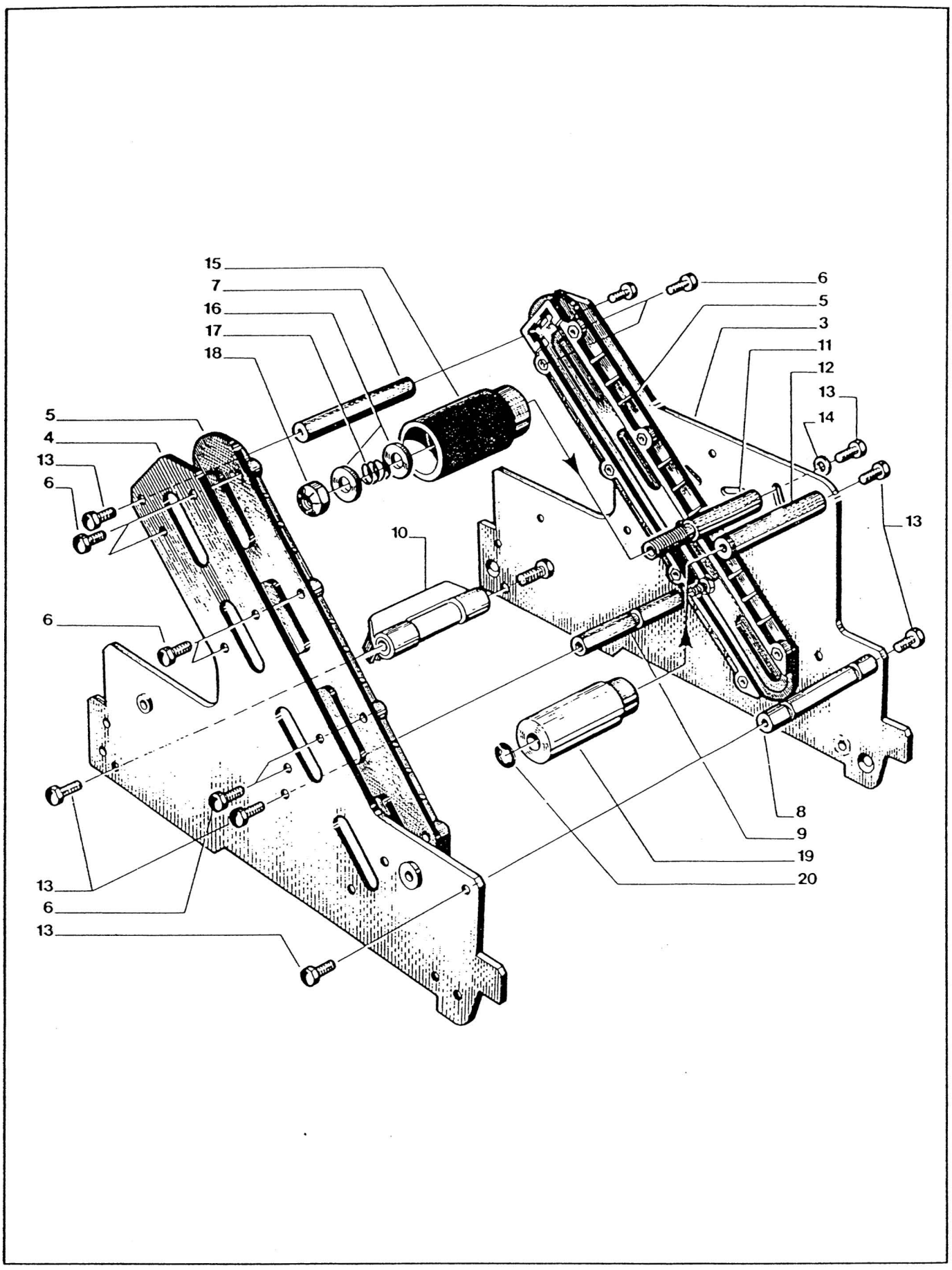

Figure 2571

Figure 2572

Ref. No.	3M Part No.	Description
2572-1	78-8060-8239-8	Exit Gr. Assembly
2572-2	78-8060-8226-5	Shoulder - Exit Right
2572-3	78-8060-8228-1	Shoulder - Exit Left
2572-4	78-8060-8229-9	Spacer - Hex 10 x 60
2572-5	78-8060-8204-2	Screw - Hex Hd M6 x 12
2572-6	78-8060-8217-4	Shaft - 10 x 60
2572-7	78-8052-6586-1	Bushing - Buffing Roller
2572-8	78-8057-6178-6	Roller - Buffing NM
2572-9	78-8060-8223-2	Screw - Flat Hd M6 x 12
2572-10	78-8060-8234-9	Shaft - 10 x 90
2572-11	78-8060-8238-0	Hock - Spring
2572-12	78-8060-8394-1	Spring - Main Bottom

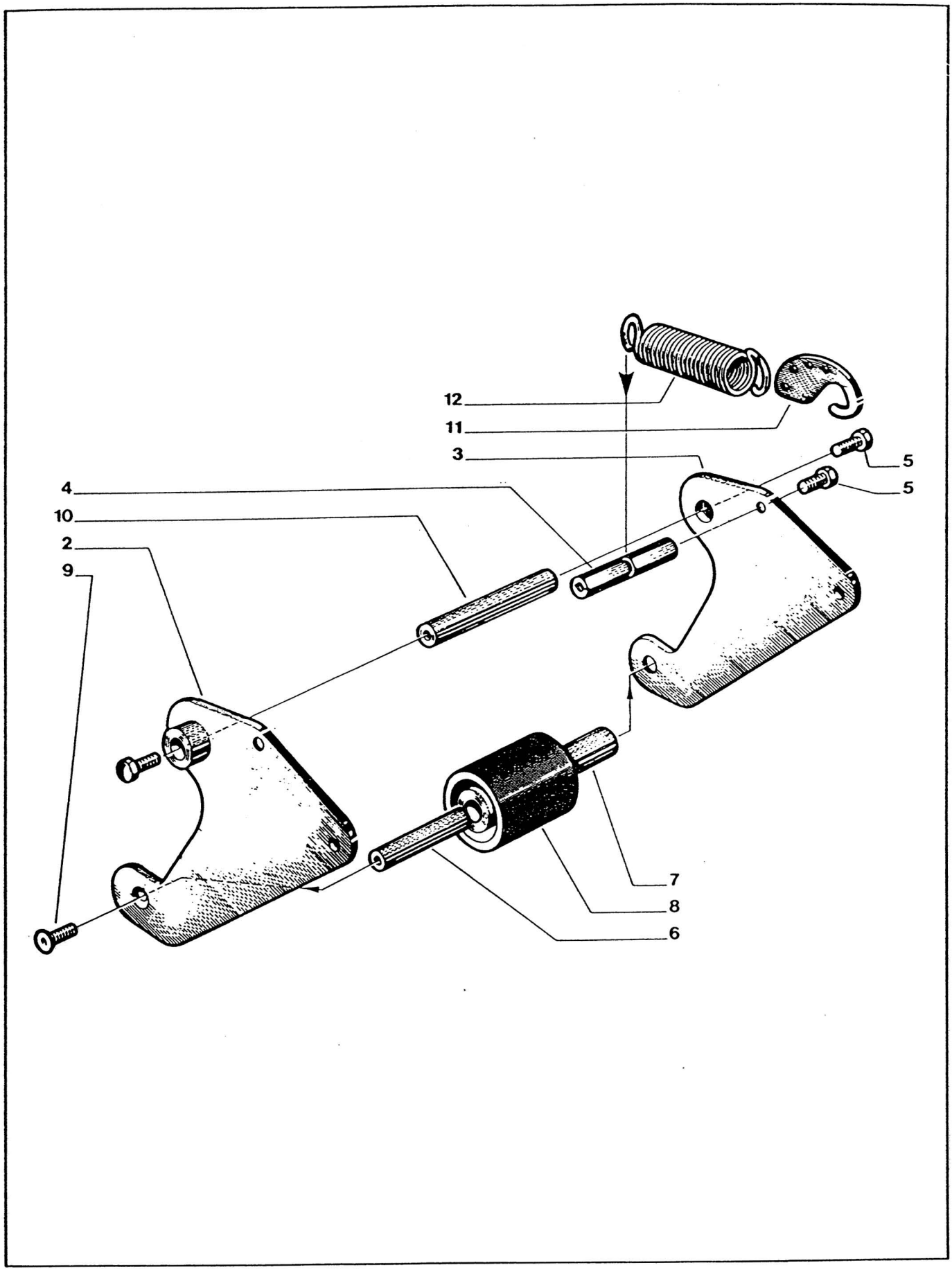

Figure 2572

THIS PAGE IS BLANK

DECLARATION DE CONFORMITE

Nom de la société:
3M Deutschland GmbH

Adresse de la société:
3M Laboratories (Europe)
Hansastr. 9
41453 Neuss

Déclare que le(s) produit(s):

Description du produit et référence(s):
3M Matic Case Sealer/Case Former*

Type et/ou Description:

100a-E ☐	200a-E ☐	300cf-E ☐	700a-E ☐	700aks-E ☐	700r-E ☐	700rks-E ☐
120a-E ☐	120a3-E ☐	120ab-E ☐	120af-E ☐	120af3-E ☐	800a-E ☐	800a3-E ☐
800asb-E ☐	800ab-E ☐	800af-E ☐	800af3-E ☐	800r-E ☐	800r3-E ☐	800rf-E ☐
400cf-E ☐	410cf-E ☐	420cf-E ☐	430cf-E ☐			

Conforme aux normes suivantes:

Directives

Machine:	**98/37/EEC**
Basse Tension:	**73/23/EEC, 93/68/EEC**
CEM:	**89/336/EEC, 92/31/EEC, 93/68/EEC**

Année d'apposition de la norme CE
1996

Numéro de série de la machine
Voir Déclaration de Conformité originale en Anglais

Normes

Sécurité:	**GS-NG-1 dated 01/96**	**"Safety of packaging and auxiliary packaging machines"**
	EN 292, part 1 & 2	**"Safety of machinery"**
	EN 294	**"Safety distances"**
	EN 349	**"Minimum gap"**
	EN 418	**"Emergency stop equipment"**
	EN 23741	**"Acustics Broad-Band"**
	EN 23742	**"Acustics Discrete Frequency and Narrow Band"**
	EN 60204-1	**"Safety of machinery - Electrical equipment of machines - General requirements"**
CEM:	**EN 50081-1**	**"Generic emission standard; residential, commercial and light industry"**
	EN 55011 / 55022	"Class A - Radiated/Conducted Emissions"
	EN 61000-3-2	"Harmonic Emissions, Class A"
	EN 61000-3-3	"Flicker"
	EN 50082-1	**"Generic immunity standard; residential, commercial and light industry"**
	EN 61000-4-2	"Electrostatic Discharge (ESD)
	EN 61000-4-3	"Radiated Immunity"
	EN 61000-4-4	"Electrical Fast Transient (EFT)"
	EN 61000-4-5	"Surge"
	EN 61000-4-6	"Conducted Immunity"
	EN 61000-4-11	"Voltage Dips and Interruptions"

Système qualité:

Signataire: **John Jackson**	Titre: **Sen. Techn. Manger**
Signature:	Date:

3.0.01618.03A FR

Note: Ce document est la traduction Française de la version originale en Anglais signée par John JACKSON le 12 Décembre 2000

VERKLARING VAN CONFORMITEIT

De bedrijfsnaam:
3M Deutschland GmbH

Het bedrijfsadres:
3M Laboratories (Europe)
Hansastr. 9
41453 Neuss

Verklaart dat het product (de producten):

Productnaam en/of Model nummer (s):
3M Matic Case Sealer/Case Former*

Type en/of Beschrijving:

100a-E ☐	200a-E ☐	300cf-E ☐	700a-E ☐	700aks-E ☐	700r-E ☐	700rks-E ☐
120a-E ☐	120a3-E ☐	120ab-E ☐	120af-E ☐	120af3-E ☐	800a-E ☐	800a3-E ☐
800asb-E ☐	800ab-E ☐	800af-E ☐	800af3-E ☐	800r-E ☐	800r3-E ☐	800rf-E ☐
400cf-E ☐	410cf-E ☐	420cf-E ☐	430cf-E ☐			

Overeenkomt (overeenkomen) met de volgende specificatie's:

Richtlijnen

Machinerie:	**98/37/EEC**
Laag Voltage:	**73/23/EEC, 93/68/EEC**
EMC:	**89/336/EEC, 92/31/EEC, 93/68/EEC**

CE certificaat bijgevoegd sinds
1996

Serienummer van de feitelijke machine:
zie de originele engelse Verklaring van Conformiteit

Standaarden

Veiligheid:	**GS-NG-1 dated 01/96**	**"Safety of packaging and auxiliary packaging machines"**
	EN 292, part 1 & 2	**"Safety of machinery"**
	EN 294	**"Safety distances"**
	EN 349	**"Minimum gap"**
	EN 418	**"Emergency stop equipment"**
	EN 23741	**"Acustics Broad-Band"**
	EN 23742	**"Acustics Discrete Frequency and Narrow Band"**
	EN 60204-1	**"Safety of machinery - Electrical equipment of machines - General requirements"**
EMC:	**EN 50081-1**	**"Generic emission standard; residential, commercial and light industry"**
	EN 55011 / 55022	"Class A - Radiated/Conducted Emissions"
	EN 61000-3-2	"Harmonic Emissions, Class A"
	EN 61000-3-3	"Flicker"
	EN 50082-1	**"Generic immunity standard; residential, commercial and light industry"**
	EN 61000-4-2	"Electrostatic Discharge (ESD)
	EN 61000-4-3	"Radiated Immunity"
	EN 61000-4-4	"Electrical Fast Transient (EFT)"
	EN 61000-4-5	"Surge"
	EN 61000-4-6	"Conducted Immunity"
	EN 61000-4-11	"Voltage Dips and Interruptions"

Kwaliteitssysteem:

Ondertekenaar van de Verklaring: **John Jackson**	Funktie: **Sen. Techn. Manager**
Handtekening:	Datum

3.0.01618.03A NL

N.B.: Deze verklaring is de Nederlandse vertaling van de originele engelse versie, Die getekend is door John Jackson op 12 Dec. 2000

VAREDEKLARASJON

Firma navn:
3M Deutschland GmbH

Firma adresse:
3M Laboratories (Europe)
Hansastr. 9
41453 Neuss

Bekrefter at produktet (ene):

Produktnavn og/eller Modellnummer:
3M Matic Case Sealer/Case Former*

Type og/eller Beskrivelse:

100a-E ☐	200a-E ☐	300cf-E ☐	700a-E ☐	700aks-E ☐	700r-E ☐	700rks-E ☐
120a-E ☐	120a3-E ☐	120ab-E ☐	120af-E ☐	120af3-E ☐	800a-E ☐	800a3-E ☐
800asb-E ☐	800ab-E ☐	800af-E ☐	800af3-E ☐	800r-E ☐	800r3-E ☐	800rf-E ☐
400cf-E ☐	410cf-E ☐	420cf-E ☐	430cf-E ☐			

Tilpasset følgende spesifikasjoner:

Direktiv

Maskin:	**98/37/EEC**
Lavspenning:	**73/23/EEC, 93/68/EEC**
EMC:	**89/336/EEC, 92/31/EEC, 93/68/EEC**

Første år med CE godkjennelse
1996

Maskinens serienummer:
se Engelsk - Declaration of Conformity

Standarder

Sikkerhet:	**GS-NG-1 dated 01/96**	**"Safety of packaging and auxiliary packaging machines"**
	EN 292, part 1 & 2	**"Safety of machinery"**
	EN 294	**"Safety distances"**
	EN 349	**"Minimum gap"**
	EN 418	**"Emergency stop equipment"**
	EN 23741	**"Acustics Broad-Band"**
	EN 23742	**"Acustics Discrete Frequency and Narrow Band"**
	EN 60204-1	**"Safety of machinery - Electrical equipment of machines - General requirements"**
EMC:	**EN 50081-1**	**"Generic emission standard; residential, commercial and light industry"**
	EN 55011 / 55022	"Class A - Radiated/Conducted Emissions"
	EN 61000-3-2	"Harmonic Emissions, Class A"
	EN 61000-3-3	"Flicker"
	EN 50082-1	**"Generic immunity standard; residential, commercial and light industry"**
	EN 61000-4-2	"Electrostatic Discharge (ESD)
	EN 61000-4-3	"Radiated Immunity"
	EN 61000-4-4	"Electrical Fast Transient (EFT)"
	EN 61000-4-5	"Surge"
	EN 61000-4-6	"Conducted Immunity"
	EN 61000-4-11	"Voltage Dips and Interruptions"

Kvaltets system

Deklarasjon signert av: **John Jackson**	Tittel: **Sen. Techn. Manager**
Signatur:	Dato

3.0.01618.03A NO

PS: Dette er den nasjonale oversettelsen av dokumentet fra den Engelske versonen, signert John Jackson, Desember 12/2000

PRODUKTDEKLARATION

Företagsnamn:
3M Deutschland GmbH

Företagsadress:
3M Laboratories (Europe)
Hansastr. 9
41453 Neuss

Intygar att produkten(erna):

Produktnamn och / eller Modellnummer:
3M Matic Case Sealer/Case Former*

Typ och / eller beskrivning:

100a-E ☐	200a-E ☐	300cf-E ☐	700a-E ☐	700aks-E ☐	700r-E ☐	700rks-E ☐
120a-E ☐	120a3-E ☐	120ab-E ☐	120af-E ☐	120af3-E ☐	800a-E ☐	800a3-E ☐
800asb-E ☐	800ab-E ☐	800af-E ☐	800af3-E ☐	800r-E ☐	800r3-E ☐	800rf-E ☐
400cf-E ☐	410cf-E ☐	420cf-E ☐	430cf-E ☐			

Uppfyller följande specifikationer:

Direktiv

Maskinutrustning:	**98/37/EEC**
Lågspänning:	**73/23/EEC, 93/68/EEC**
EMC:	**89/336/EEC, 92/31/EEC, 93/68/EEC**

År när CE-märkning började tillämpas
1996

Serienummer på aktuell maskin:
se engelskt orginal av Produktdeklaration

Standarder

Säkerhet:	**GS-NG-1 dated 01/96**	**"Safety of packaging and auxiliary packaging machines"**
	EN 292, part 1 & 2	**"Safety of machinery"**
	EN 294	**"Safety distances"**
	EN 349	**"Minimum gap"**
	EN 418	**"Emergency stop equipment"**
	EN 23741	**"Acustics Broad-Band"**
	EN 23742	**"Acustics Discrete Frequency and Narrow Band"**
	EN 60204-1	**"Safety of machinery - Electrical equipment of machines - General requirements"**
EMC:	**EN 50081-1**	**"Generic emission standard; residential, commercial and light industry"**
	EN 55011 / 55022	"Class A - Radiated/Conducted Emissions"
	EN 61000-3-2	"Harmonic Emissions, Class A"
	EN 61000-3-3	"Flicker"
	EN 50082-1	**"Generic immunity standard; residential, commercial and light industry"**
	EN 61000-4-2	"Electrostatic Discharge (ESD)
	EN 61000-4-3	"Radiated Immunity"
	EN 61000-4-4	"Electrical Fast Transient (EFT)"
	EN 61000-4-5	"Surge"
	EN 61000-4-6	"Conducted Immunity"
	EN 61000-4-11	"Voltage Dips and Interruptions"

Kvalitetssystem:

Signatur gällande Produktdeklaration: **John Jackson**	Titel: **Teknisk Chef**
Signatur:	Datum

3.0.01618.03A SE

Obs: Detta dokument är en lokal översättning av den engelska orginalversionen, signerad av John Jackson 12 december 2000.

VAREDEKLARASJON

Firma navn:
3M Deutschland GmbH

Firma adresse:
3M Laboratories (Europe)
Hansastr. 9
41453 Neuss

Bekrefter at produktet (ene):

Produktnavn og/eller Modellnummer:
3M Matic Case Sealer/Case Former*

Type og/eller Beskrivelse:

100a-E ☐	200a-E ☐	300cf-E ☐	700a-E ☐	700aks-E ☐	700r-E ☐	700rks-E ☐
120a-E ☐	120a3-E ☐	120ab-E ☐	120af-E ☐	120af3-E ☐	800a-E ☐	800a3-E ☐
800asb-E ☐	800ab-E ☐	800af-E ☐	800af3-E ☐	800r-E ☐	800r3-E ☐	800rf-E ☐
400cf-E ☐	410cf-E ☐	420cf-E ☐	430cf-E ☐			

Tilpasset følgende spesifikasjoner:

Direktiv

Maskin:	**98/37/EEC**
Lavspenning:	**73/23/EEC, 93/68/EEC**
EMC:	**89/336/EEC, 92/31/EEC, 93/68/EEC**

Første år med CE godkjennelse
1996

Maskinens serienummer:
se Engelsk - Declaration of Conformity

Standarder

Sikkerhet:	**GS-NG-1 dated 01/96**	**"Safety of packaging and auxiliary packaging machines"**
	EN 292, part 1 & 2	**"Safety of machinery"**
	EN 294	**"Safety distances"**
	EN 349	**"Minimum gap"**
	EN 418	**"Emergency stop equipment"**
	EN 23741	**"Acustics Broad-Band"**
	EN 23742	**"Acustics Discrete Frequency and Narrow Band"**
	EN 60204-1	**"Safety of machinery - Electrical equipment of machines - General requirements"**
EMC:	**EN 50081-1**	**"Generic emission standard; residential, commercial and light industry"**
	EN 55011 / 55022	"Class A - Radiated/Conducted Emissions"
	EN 61000-3-2	"Harmonic Emissions, Class A"
	EN 61000-3-3	"Flicker"
	EN 50082-1	**"Generic immunity standard; residential, commercial and light industry"**
	EN 61000-4-2	"Electrostatic Discharge (ESD)
	EN 61000-4-3	"Radiated Immunity"
	EN 61000-4-4	"Electrical Fast Transient (EFT)"
	EN 61000-4-5	"Surge"
	EN 61000-4-6	"Conducted Immunity"
	EN 61000-4-11	"Voltage Dips and Interruptions"

Kvaltets system

Deklarasjon signert av: **John Jackson**	Tittel: **Sen. Techn. Manager**
Signatur:	Dato

3.0.01618.03A NO

PS: Dette er den nasjonale oversettelsen av dokumentet fra den Engelske versonen, signert John Jackson, Desember 12/2000

PRODUKTDEKLARATION

Företagsnamn:
3M Deutschland GmbH

Företagsadress:
3M Laboratories (Europe)
Hansastr. 9
41453 Neuss

Intygar att produkten(erna):

Produktnamn och / eller Modellnummer:
3M Matic Case Sealer/Case Former*

Typ och / eller beskrivning:

100a-E ☐	200a-E ☐	300cf-E ☐	700a-E ☐	700aks-E ☐	700r-E ☐	700rks-E ☐
120a-E ☐	120a3-E ☐	120ab-E ☐	120af-E ☐	120af3-E ☐	800a-E ☐	800a3-E ☐
800asb-E ☐	800ab-E ☐	800af-E ☐	800af3-E ☐	800r-E ☐	800r3-E ☐	800rf-E ☐
400cf-E ☐	410cf-E ☐	420cf-E ☐	430cf-E ☐			

Uppfyller följande specifikationer:

Direktiv

Maskinutrustning:	**98/37/EEC**
Lågspänning:	**73/23/EEC, 93/68/EEC**
EMC:	**89/336/EEC, 92/31/EEC, 93/68/EEC**

År när CE-märkning började tillämpas
1996

Serienummer på aktuell maskin:
se engelskt orginal av Produktdeklaration

Standarder

Säkerhet:	**GS-NG-1 dated 01/96**	**"Safety of packaging and auxiliary packaging machines"**
	EN 292, part 1 & 2	**"Safety of machinery"**
	EN 294	**"Safety distances"**
	EN 349	**"Minimum gap"**
	EN 418	**"Emergency stop equipment"**
	EN 23741	**"Acustics Broad-Band"**
	EN 23742	**"Acustics Discrete Frequency and Narrow Band"**
	EN 60204-1	**"Safety of machinery - Electrical equipment of machines - General requirements"**
EMC:	**EN 50081-1**	**"Generic emission standard; residential, commercial and light industry"**
	EN 55011 / 55022	"Class A - Radiated/Conducted Emissions"
	EN 61000-3-2	"Harmonic Emissions, Class A"
	EN 61000-3-3	"Flicker"
	EN 50082-1	**"Generic immunity standard; residential, commercial and light industry"**
	EN 61000-4-2	"Electrostatic Discharge (ESD)
	EN 61000-4-3	"Radiated Immunity"
	EN 61000-4-4	"Electrical Fast Transient (EFT)"
	EN 61000-4-5	"Surge"
	EN 61000-4-6	"Conducted Immunity"
	EN 61000-4-11	"Voltage Dips and Interruptions"

Kvalitetssystem:

Signatur gällande Produktdeklaration: **John Jackson**	Titel: **Teknisk Chef**
Signatur:	Datum

3.0.01618.03A SE

Obs: Detta dokument är en lokal översättning av den engelska orginalversionen, signerad av John Jackson 12 december 2000.

VALMISTAJAN VAKUUTUS

CE

Yritys
3M Deutschland GmbH

Osoite
3M Laboratories (Europe)
Hansastr. 9
41453 Neuss

Declares that the product(s):

Tuotteen nimi ja/tai malli
3M Matic Case Sealer/Case Former*

Kuvaus

100a-E ☐	200a-E ☐	300cf-E ☐	700a-E ☐	700aks-E ☐	700r-E ☐	700rks-E ☐
120a-E ☐	120a3-E ☐	120ab-E ☐	120af-E ☐	120af3-E ☐	800a-E ☐	800a3-E ☐
800asb-E ☐	800ab-E ☐	800af-E ☐	800af3-E ☐	800r-E ☐	800r3-E ☐	800rf-E ☐
400cf-E ☐	410cf-E ☐	420cf-E ☐	430cf-E ☐			

Noudattaa seuraavia vaatimuksia:

Direktiivit

Konedirektiivi	**98/37/EEC**
Pienjännitedirektiivi	**73/23/EEC, 93/68/EEC**
EMC-direktiivi	**89/336/EEC, 92/31/EEC, 93/68/EEC**

Year in which CE mark first affixed
1996

Laitteen sarjanumero
katso alkuperäinen englanninkielinen valmistajan vakuutus

Standardit

Turvallisuus:	**GS-NG-1 dated 01/96**	**"Safety of packaging and auxiliary packaging machines"**
	EN 292, part 1 & 2	**"Safety of machinery"**
	EN 294	**"Safety distances"**
	EN 349	**"Minimum gap"**
	EN 418	**"Emergency stop equipment"**
	EN 23741	**"Acustics Broad-Band"**
	EN 23742	**"Acustics Discrete Frequency and Narrow Band"**
	EN 60204-1	**"Safety of machinery - Electrical equipment of machines - General requirements"**
EMC:	**EN 50081-1**	**"Generic emission standard; residential, commercial and light industry"**
	EN 55011 / 55022	"Class A - Radiated/Conducted Emissions"
	EN 61000-3-2	"Harmonic Emissions, Class A"
	EN 61000-3-3	"Flicker"
	EN 50082-1	**"Generic immunity standard; residential, commercial and light industry"**
	EN 61000-4-2	"Electrostatic Discharge (ESD)
	EN 61000-4-3	"Radiated Immunity"
	EN 61000-4-4	"Electrical Fast Transient (EFT)"
	EN 61000-4-5	"Surge"
	EN 61000-4-6	"Conducted Immunity"
	EN 61000-4-11	"Voltage Dips and Interruptions"

Laatujärjestelmä

Allekirjoittaja	Tehtävä
John Jackson	**Sen. Techn. Manager**
Allekirjoitus	Päivämäärä

3.0.01618.03A FI

Huomautus: Tämä valmistajan vakuutus on kotimainen käännös alkuperäisestä englannin kielisestä versiosta

KVALITETSCERTIFIKAT

CE

Firmanavn
3M a/s

Firmaadresse
3M a/s Industrielle tapes & klæbestoffer
Fabriksparken 15
2600 Glostrup

Deklarerer at følgende produkt(er):

Produkt
3M Matic Kartonlukningsmaskine*

Type

100a-E ☐	200a-E ☐	300cf-E ☐	700a-E ☐	700aks-E ☐	700r-E ☐	700rks-E ☐
120a-E ☐	120a3-E ☐	120ab-E ☐	120af-E ☐	120af3-E ☐	800a-E ☐	800a3-E ☐
800asb-E ☐	800ab-E ☐	800af-E ☐	800af3-E ☐	800r-E ☐	800r3-E ☐	800rf-E ☐
400cf-E ☐	410cf-E ☐	420cf-E ☐	430cf-E ☐			

Lever op til følgende specifikationer:

Direktiver

Maskiner:	**98/37/EEC**
Strømforsyning:	**73/23/EEC, 93/68/EEC**
EMC:	**89/336/EEC, 92/31/EEC, 93/68/EEC**

Årstal for første CE-mærkning
1996

Serienr.: af aktuelle maskine
Se venligst venlagte engelske version af kvalitetscertifikat

Standarder

Sikkerhed:	**GS-NG-1 dated 01/96**	**"Safety of packaging and auxiliary packaging machines"**
	EN 292, part 1 & 2	**"Safety of machinery"**
	EN 294	**"Safety distances"**
	EN 349	**"Minimum gap"**
	EN 418	**"Emergency stop equipment"**
	EN 23741	**"Acustics Broad-Band"**
	EN 23742	**"Acustics Discrete Frequency and Narrow Band"**
	EN 60204-1	**"Safety of machinery - Electrical equipment of machines - General requirements"**
EMC:	**EN 50081-1**	**"Generic emission standard; residential, commercial and light industry"**
	EN 55011 / 55022	"Class A - Radiated/Conducted Emissions"
	EN 61000-3-2	"Harmonic Emissions, Class A"
	EN 61000-3-3	"Flicker"
	EN 50082-1	**"Generic immunity standard; residential, commercial and light industry"**
	EN 61000-4-2	"Electrostatic Discharge (ESD)
	EN 61000-4-3	"Radiated Immunity"
	EN 61000-4-4	"Electrical Fast Transient (EFT)"
	EN 61000-4-5	"Surge"
	EN 61000-4-6	"Conducted Immunity"
	EN 61000-4-11	"Voltage Dips and Interruptions"

Kvalitetssystem

Udsteder	Titel
Lars Koch	**Tech. service ingeniør**
Underskrift	Dato

3.0.00994.03A DK

DECLARAÇÃO DE CONFORMIDADE

Nome da Empresa:
3M Deutschland GmbH

Endereço da Empresa:
3M Laboratories (Europe)
Hansastr. 9
41453 Neuss

Declara-se que o(s) produto(s):

Nome do Produto e/ou Número do Modelo(s):
3M Matic Case Sealer/Case Former*

Referência e/ou Descrição:

100a-E ☐	200a-E ☐	300cf-E ☐	700a-E ☐	700aks-E ☐	700r-E ☐	700rks-E ☐
120a-E ☐	120a3-E ☐	120ab-E ☐	120af-E ☐	120af3-E ☐	800a-E ☐	800a3-E ☐
800asb-E ☐	800ab-E ☐	800af-E ☐	800af3-E ☐	800r-E ☐	800r3-E ☐	800rf-E ☐
400cf-E ☐	410cf-E ☐	420cf-E ☐	430cf-E ☐			

De acordo com as seguintes especificações:

Directivas

Maquinaria:	**98/37/EEC**
Baixa Voltagem:	**73/23/EEC, 93/68/EEC**
EMC:	**89/336/EEC, 92/31/EEC, 93/68/EEC**

Primeiro ano em que foi afixada a marca CE
1996

Número de serie da máquina actual
Veja por favor a Declaração de Conformidade na versão Inglesa

Normas

Segurança:	**GS-NG-1 dated 01/96**	**"Safety of packaging and auxiliary packaging machines"**
	EN 292, part 1 & 2	**"Safety of machinery"**
	EN 294	**"Safety distances"**
	EN 349	**"Minimum gap"**
	EN 418	**"Emergency stop equipment"**
	EN 23741	**"Acustics Broad-Band"**
	EN 23742	**"Acustics Discrete Frequency and Narrow Band"**
	EN 60204-1	**"Safety of machinery - Electrical equipment of machines - General requirements"**
EMC:	**EN 50081-1**	**"Generic emission standard; residential, commercial and light industry"**
	EN 55011 / 55022	"Class A - Radiated/Conducted Emissions"
	EN 61000-3-2	"Harmonic Emissions, Class A"
	EN 61000-3-3	"Flicker"
	EN 50082-1	**"Generic immunity standard; residential, commercial and light industry"**
	EN 61000-4-2	"Electrostatic Discharge (ESD)
	EN 61000-4-3	"Radiated Immunity"
	EN 61000-4-4	"Electrical Fast Transient (EFT)"
	EN 61000-4-5	"Surge"
	EN 61000-4-6	"Conducted Immunity"
	EN 61000-4-11	"Voltage Dips and Interruptions"

Qualidade do Sistema:

Responsável pela Declaração: **John Jackson**	Função: **Sen. Techn. Manger**
Assinatura:	Data:

3.0.01618.03A PT

Nota: Este DOC é a tradução exacta da versão Inglesa, assinada pelo John Jackson em Dez. 12/2000

CERTIFICADO DE CONFORMIDAD

Compañía:
3M Deutschland GmbH

Dirección:
3M Laboratories (Europe)
Hansastr. 9
41453 Neuss

Certifica que el/los siguientes producto/s:

Número de Referencia y/o Modelo:
3M Matic Case Sealer/Case Former*

Tipo y/o Descripción:

100a-E ☐	200a-E ☐	300cf-E ☐	700a-E ☐	700aks-E ☐	700r-E ☐	700rks-E ☐
120a-E ☐	120a3-E ☐	120ab-E ☐	120af-E ☐	120af3-E ☐	800a-E ☐	800a3-E ☐
800asb-E ☐	800ab-E ☐	800af-E ☐	800af3-E ☐	800r-E ☐	800r3-E ☐	800rf-E ☐
400cf-E ☐	410cf-E ☐	420cf-E ☐	430cf-E ☐			

Conforme a las siguientes especificaciones:

Directivas

Maquinaria:	**98/37/EEC**
Bajo Voltaje:	**73/23/EEC, 93/68/EEC**
Compatibilidad Electromagnética (EMC):	**89/336/EEC, 92/31/EEC, 93/68/EEC**

Año en que la marca CE fue puesta por 1º vez
1996

Número de Serie
ver Certificado original en Inglés

Normas

Seguridad:	**GS-NG-1 dated 01/96**	**"Safety of packaging and auxiliary packaging machines"**
	EN 292, part 1 & 2	**"Safety of machinery"**
	EN 294	**"Safety distances"**
	EN 349	**"Minimum gap"**
	EN 418	**"Emergency stop equipment"**
	EN 23741	**"Acustics Broad-Band"**
	EN 23742	**"Acustics Discrete Frequency and Narrow Band"**
	EN 60204-1	**"Safety of machinery - Electrical equipment of machines - General requirements"**
EMC:	**EN 50081-1**	**"Generic emission standard; residential, commercial and light industry"**
	EN 55011 / 55022	"Class A - Radiated/Conducted Emissions"
	EN 61000-3-2	"Harmonic Emissions, Class A"
	EN 61000-3-3	"Flicker"
	EN 50082-1	**"Generic immunity standard; residential, commercial and light industry"**
	EN 61000-4-2	"Electrostatic Discharge (ESD)
	EN 61000-4-3	"Radiated Immunity"
	EN 61000-4-4	"Electrical Fast Transient (EFT)"
	EN 61000-4-5	"Surge"
	EN 61000-4-6	"Conducted Immunity"
	EN 61000-4-11	"Voltage Dips and Interruptions"

Sistema de Calidad:

Firmante del Certificado: **John Jackson**	Título: **Jefe Técnico**
Firma:	Fecha

3.0.01618.03A ES

Nota: Este documento está traducido del original en versión Inglesa, Firmado por John Jackson el 12 de Diciembre de 2000

3M

Δήλωση Συμμόρφωσης

CE

Επωνυμία Εταιρείας

3M Deutschland GmbH

Διεύθυνση Εταιρείας

3M Laboratories (Europe)
Hansastr. 9
41453 Neuss

Δηλώνει ότι το(α) προϊόν(τα):

Ονομασία Προϊόντος και/ή αριθμός(οί) Μοντέλου

3M Matic Case Sealer/Case Former*

Τύπος και/ή Περιγραφή

100a-E ☐, 200a-E ☐, 300cf* ☐, 700a-E ☐, 700aks-E☐, 700r-E ☐, 700rks-E☐,
120a-E ☐, 120a3-E☐, 120ab-E☐, 120af-E ☐, 120af3 ☐, 800a-E ☐, 800a3-E ☐,
800asb-E☐, 800ab-E☐, 800af-E ☐, 800af3-E☐, 800r-E ☐, 800r3-E☐, 800rf-E ☐
400cf-E ☐, 410cf-E ☐, 420cf-E ☐, 430cf-E ☐

Είναι σύμφωνο(α) με τις ακόλουθες προδιαγραφές:

Οδηγίες

Μηχανών:	**98/37/EEC**
Χαμηλής Τάσης:	**73/23/EEC, 93/68/EEC**
ΗΜΣ:	**89/336/EEC, 92/31/EEC, 93/68/EEC**

Έτος πρώτης τοποθέτησης σήμανσης CE
1996

Αριθμός σειράς κύριας μηχανής
βλέπε πρότυπη Αγγλική Δήλωση Συμμόρφωσης

Πρότυπα

Ασφάλεια:	**GS–NG–1 dated 01/96**	**"Safety of packaging and auxiliary packaging machines"**
	EN 292, part 1&2	**"Safety of machinery"**
	EN 294	**"Safety distances"**
	EN 349	**"Minimum gap"**
	EN 418	**"Emergency stop equipment"**
	EN 23741	**"Acoustics Broad- Band"**
	EN 23742	**"Acoustics Discrete Frequency and Narrow Band"**
	EN 60204- 1	**"Safety of machinery – Electrical equipment of machines – General requirements"**
ΗΜΣ: EN	**50081-1**	**"Generic emission standard; residential, commercial and light industry"**
EN	55011 / 55022	"Class A – Radiated/Conducted Emissions"
EN	61000-3-2	"Harmonic Emissions, Class A"
EN	61000-3-3	"Flicker"
EN	**50082-1**	**"Generic immunity standard; residential, commercial and light industry"**
EN	61000-4-2	"Electrostatic Discharge (ESD)"
EN	61000-4-3	"Radiated Immunity"
EN	61000-4-4	"Electrical Fast Transient (EFT)"
EN	61000-4-5	"Surge"
EN	61000-4-6	"Conducted Immunity"
EN	61000-4-11	"Voltage Dips and Interruptions"

Σύστημα Ποιότητας

Ο Υπογράφων τη Δήλωση	**Τίτλος**
John Jackson	**Sen. Techn. Manger**

Υπογραφή

Σημείωση: Η παρούσα ΔΣ είναι η εθνική μετάφραση της πρωτότυπης Αγγλικής έκδοσης, Υπογεγραμμένης από τον κ. John Jackson στις 12 Δεκ. 2000.

Ημερομηνία

3.0.01618.03A GR