SIAT

M. J. MAILLIS GROUP

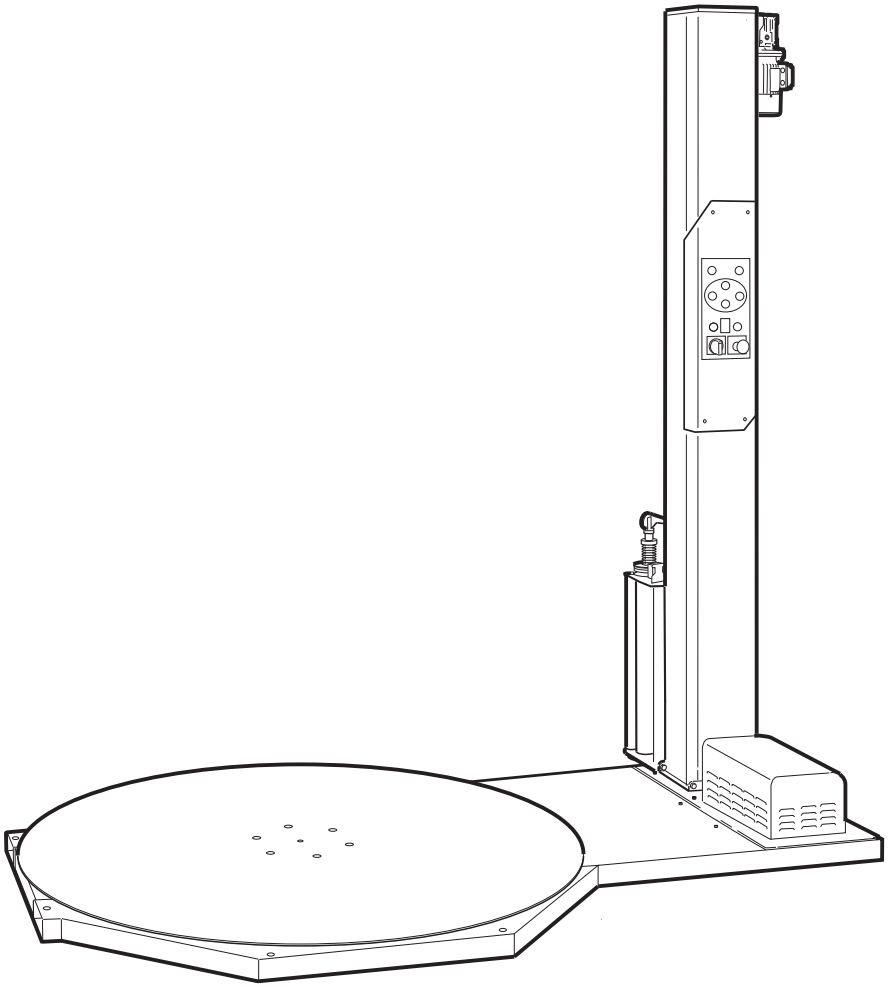

F1

FASCIAPALLET SEMIAUTOMATICO

SEMI-AUTOMATIC PALLET STRETCHWRAPPER

MACHINE A PALETTISER AVEC FILM ETIRABLE SEMI-AUTOMATIQUE

HALBAUTOMATISCHE PALETTENWICKELMASCHINE

ENFARDADORA DE PALES SEMIAUTOMATICA

MANUALE DI ISTRUZIONI E PARTI DI RICAMBIO

INSTRUCTIONS MANUAL AND SPARE PARTS LIST

MANUEL D'INSTRUCTIONS ET PIECES DETACHEES

BEDIENUNGSANLEITUNG UND ERSTAZTEILLISTE

MANUAL DE INSTRUCCIONES Y RECAMBIOS

CE

Publication Code: SMD00004K.9

Instruction manual for the use, safety, maintenance and spare parts concerning the pallet stretchwrapper F1

This publication is property of SIAT S.P.A.
Via Puecher, 22 - 22078 TURATE (CO) - ITALY
Tel. 02-964951 - Fax. 02-9689727

Edition November 2012

The reproduction of this manual is strictly forbidden. All rights reserved © Siat S.p.A. 2012.

The manufacturer reserves the right to modify the product at any time without notice.

Publication n. SMD00004K
Release 9

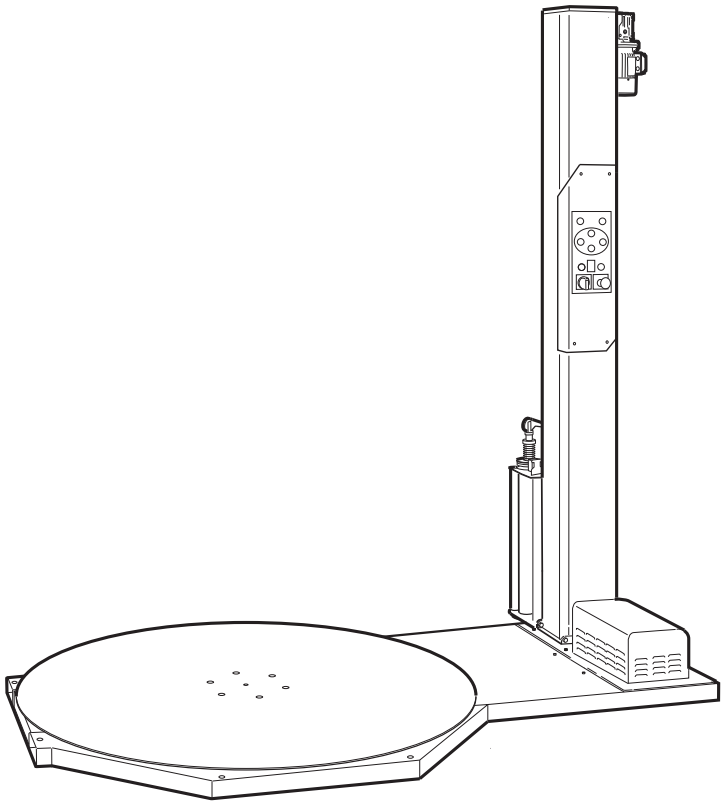

F1

SEMIAUTOMATIC PALLET STRETCHWRAPPER

-Capacity: 2000 kg
-Turntable diameter: 1500/1650/1800 mm
-Film tension adjustment:
- film reel carriage with mechanical tensioning brake,
- film reel carriage with electromagnetic tensioning brake,
- film reel carriage with mechanical pre-stretch
- film reel carriage with motorized pre-stretch

INDEX

	Section
Manufacturing specifications	1.1
Manual, how to use the	1.2
Serial Number	2.1
After-sales service	2.2
Warranty	2.3
Safety	3
Qualifications of operator	3.6
Technical specifications	4.2
Dimensions	4.4
Noise measurement	4.7
Transport	5
Unpacking	6
Installation	7
Theory of operation	8
Controls	9
Safety devices	10
Set-up and adjustments	11
Film threading	11.1
Operation	12
Cleaning	12..12
Troubleshooting	12.15
Maintenance	13
Lubrication/Cleaning	13.5÷13.7
Photocell adjustment	13.8
Cleaning of the rubber roller friction	13.9
Replacement of the extruded roller gasket	13.10
Replacement gears of the pre stretch device	13.11
Replacement of turntable running wheels	13.12
Chain tensioning	13.13
List of the maintenance	13.15
Scrapping and disposal	14.1
Instructions for emergencies	14.2
Enclosures	15
Spare parts	last section

ABBREVIATIONS AND ACRONYMS

LIST OF ABBREVIATIONS, ACRONYMS AND UNUSUAL TERMS TO BE FOUND IN THIS MANUAL

Dwg.	=	drawing
Encl.	=	enclosure
Ex.	=	example
Fig.	=	figure showing spare parts
Max.	=	maximum
Min.	=	minimum
Mod.	=	machine model
N.	=	number
N/A	=	not applicable
OFF	=	machine stopped
ON	=	machine running
OPP	=	oriented polypropylene adhesive tape
PLC	=	Programmable Logic Controller
PP	=	polypropylene
PTFE	=	Polytetrafluorethylene
PVC	=	Polyvinylchloride
Ref.	=	reference mark
SIAT	=	Società Internazionale Applicazioni Tecniche (Società per Azioni)
I	=	Electromagnetic Brake which provides the tension control of the stretchable film

w = width
h = height
l = length

1-INTRODUCTION

1.1 MANUFACTURING SPECIFICATIONS

The machine has been designed and manufactured compling with the legal requirements in force at the date of its manufacture.

THE REFERENCE DOCUMENTS ARE:
Directives 98/37/CE, 2006/95 CE, 89/336 CEE, 108/04 CE, 2002/96/CE, 2003/108/CE.
UNI EN 415-6.2007

1.2 HOW TO READ AND USE THE INSTRUCTION MANUAL

1.2.1 IMPORTANCE OF THE MANUAL

The manual is an important part of the machine; all information contained herein is intended to enable the equipment to be maintained in perfect condition and operated safely. Ensure that the manual is available to all operators of this equipment and is kept up to date with all subsequent amendments.
Should the equipment be sold or disposed of, please ensure that the manual is passed onl.
The electric schemes are enclosures to the manual.
Equipment using PLC controls and/or electronic components will include relevant schematics or programmes in the enclosure, and in addition the relevant documentation will be delivered separately.

1.2.2 MANUAL MAINTENANCE

Keep the manual in a clean and dry place near the machine. Do not remove, tear or rewrite parts of the manual for any reason.
Use the manual without damaging it.
In case the manual has been lost or damaged, ask your after sale service for a new copy, quoting the code number of the document.

1.2.3 CONSULTING THE MANUAL

All pages and diagrams are numbered.
The spare parts lists are identified by the figure identification number. All the notes on safety measures or possible dangers are identified by the symbol: ⚠

All the important warning notes related to the operation of the machine are identified by the symbol: ☞
The parts typed in **bold** refer to technical data or technical notes on a specific subject.

With reference to how much contained in this manual the manufacturer declines every responsibility in case of:
-use of the machine not conforming to the national laws on the safety,
-wrong predisposition of the installation site and/or of the supporting structures on which the machine will go to operate,
-defects of tension and power supply e/o of other energetic sources,
-missed or wrong observance of the instructions furnished in this instruction manual,
-changes to the machine non authorized,
-use from personal not trained,
-use of non genuine spare parts,
-use of accessories not authorized,
-God's actions.

1.2.4 HOW TO UPDATE THE MANUAL IN CASE OF MODIFICATIONS TO THE MACHINE

Modifications to the machine are subject to manufacturer's internal procedures.
The user receives a complete and up-to-date copy of the manual together with the machine.
Afterwards the user may receive pages or parts of the manual which contain amendments or improvements made after its first publication.
The user must use them update this manual.

SIAT S.p.A.
Via Puecher, 22 - 22078 TURATE (CO) ITALY - Tel. 02964951 - Fax 029689727 - http://www.siat.com - Email: siat@siat.com

2-GENERAL INFORMATION

2.1 SERIAL NUMBER OF THE MACHINE AND NAME OF THE MANUFACTURER

SIAT
M. J. MAILLIS GROUP

SIATs.p.a.Via G.Puecher N°22
Turate (CO) ITALY

CE

Model	Part Number	Year	Ampere	Watt

Type	Serial Number	Volt	Hertz	Phase

2.2 FOR AFTER-SALE SERVICE AND SPARE PARTS PLEASE APPLY TO:

SIAT
M. J. MAILLIS GROUP

Via Puecher, 22
22078 TURATE (CO) - ITALY

Tel. 02-964951
Fax. 02-9682239
E-mail siat@siat.com

AGENT/DISTRIBUTOR OR LOCAL
AFTER SALE SERVICE:

WARRANTY

Within the limits of what is set forth below, Seller agrees to repair or replace without cost to Buyer any defective goods when such defect occurs within a period of twelve (12) months from the date in which Seller's goods have been put into use, but in no event beyond thirteen (13) months from the date of shipment.

Expressly excluded from this warranty are those parts subject to normal wear and tear (by way of illustration, but not limitation, such parts as belts, rubber rollers, gaskets, brushes, etc.) and electrical parts.

Buyer must immediately notify Seller of any defect, specifying the serial number of the machine.

Buyer shall send to Seller the defective item for repair or replacement. Seller will perform the repairs or provide a replacement within a reasonable period of time.

Upon effecting such repair or replacement, Seller shall have fulfilled its warranty obligations. In the event the repairs or replacement must be effected at the place where the machine is installed, all expenses for labor, travel and lodging of Seller's personnel shall be sustained by the Buyer. Buyer will be invoiced in conformity with Seller's standard charges for the services rendered.

Seller is not responsible for defects resulting from:

- Improper use of the machine
- Lack of proper maintenance
- Tampering with the machine or repairs effected by the Buyer.

Seller will not be liable for any injury to persons or things or for the failure of production. With respect to the materials not manufactured by Seller, such as motors and electrical equipment, Seller will grant to Buyer the same warranty Seller receives from its supplier of such materials. Seller does not warrant the compliance of its machines with the laws of non-EEC countries in which the machines may be installed, nor does it warrant compliance with laws or standards relating to the prevention of accidents or pollution.

Adaptation of Seller's machines to the aforesaid laws or standards shall be the responsibility of Buyer who assumes all liability therefore.

Buyer shall indemnify and hold Seller harmless against any claim by third parties resulting from failure to comply with the aforesaid laws and standards.

SIAT S.p.A.
Via Puecher, 22 - 22078 TURATE (CO) ITALY - Tel. 02964951 - Fax 029689727 - http://www.siat.com - Email: siat@siat.com

3-SAFETY INFORMATION

3.1 GENERAL SAFETY INFORMATION

Read all the instructions carefully before starting the work with the machine; please pay particular attention to sections marked by the symbol:

Keep this manual in a handy place near the machine: its information will help you to maintain the machine in good and safe working condition.

3.2. DEFINITION OF THE OPERATORS' QUALIFICATIONS

- Machine operator
- Maintenance technician
- Electrician
- Manufacturer’s technician

Only persons who have the skills described in the following page should be allowed to work on the machine. It is the responsibility of the user to appoint the operators having the appropriate skill level and the appropriate training for each category of job.

SKILL 1

MACHINE OPERATOr
This operator is trained to use the machine through the controls on the switchboard, to load and unload the pallets, to wrap the pallets, to load the stretch film reel.
NOTE: the factory manager should ensure that the operator has been properly trained on all the functions of the machine before starting work.

SKILL 2

MECHANICAL MAINTENANCE TECHNICIAN
This operator is trained to use the machine as the MACHINE OPERATOR and in addition is able to work with the safety protection disconnected, to check and adjust mechanical parts, to carry out maintenance operations and repair the machine.
He is not allowed to work on live electrical components.

SKILL 2a

ELECTRICAL MAINTENANCE TECHNICIAN
This operator is trained to use the machine as the MACHINE OPERATOR and in addition is able to work with the safety protection disconnected, to make adjustments, to carry out maintenance operations and repair the electrical components of the machine.
He is allowed to work on live electrical panels, connector blocks, control equipment etc.

SKILL 3

SPECIALIST FROM THE MANUFACTURER
Skilled operator sent by the manufacturer or its agent to perform complex repairs or modifications, when agreed with the customer.

3.3 INSTRUCTIONS FOR A SAFE USE OF THE MACHINE

Only persons who have the skills described on the following paragraph **3.6** are allowed to work on the machine.
It is responsibility of the user to appoint the operators having the appropriate skill level and the appropriate training for each category of job.

3.4 STATE OF THE MACHINE

List of the modes which are possible with this machine:
- automatic running;
- running with safety protections removed or disabled;
- stopped by using the main switch;
- stopped by using the lockable emergency stop button;
- electric power disconnected

3.5 NUMBER OF THE OPERATORS

The operations described hereinafter have been analized by the manufacturer; the number of operators shown for each operation is suitable to perform it in the best way.
A smaller or larger number of operators could be unsafe.

3.6 OPERATORS' SKILL LEVELS

The table below shows the minimum operator's skill for each operation with the machine.

OPERATION	STATE OF THE MACHINE		NUMBER OF OPERATORS
Installation and set up of the machine.	Running with safety protections disabled.		2
Replacement of the stretch film reel.	Stopped by pressing the EMERGENCY STOP button.		1
Loading, wrapping and unloading.	Stopped by pressing the EMERGENCY STOP button.		1
Ordinary maintenance.	Electric power disconnected.		1
Extraordinary maintenance (mechanical).	Running with safety protections disabled		1
Extraordinary maintenance (electrical).	Running with safety protections disabled.	C.A.T.	1

SIAT S.p.A.
Via Puecher, 22 - 22078 TURATE (CO) ITALY - Tel. 02964951 - Fax 029689727 - http://www.siat.com - Email: siat@siat.com

3.7 RESIDUAL HAZARDS

The pallet stretchwrapper has been designed following the CEe directives, and incorporates various safety protections which should never be removed or disabled.
Notwithstanding the safety precautions conceived by the designers of the machine, it is essential that the operator and service personnel be warned that the following uneliminable residual hazards exis

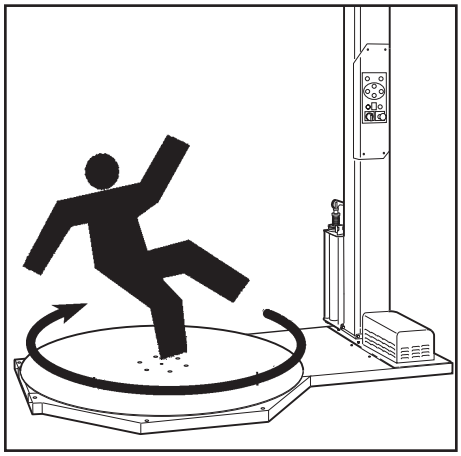

WARNING! Turntable.
Never step on the turntable, even when the machine is not working.

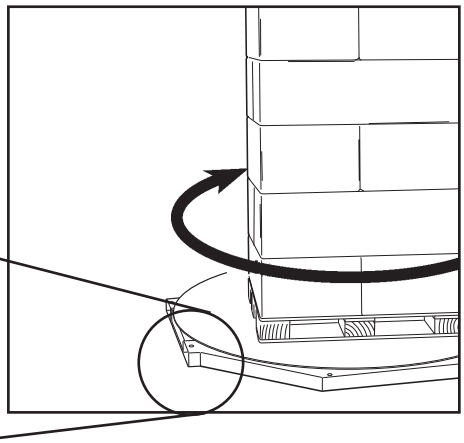

WARNING! Turntable.
Never touch the area between the turntable and the base of the machine.
Serious injuries may occur.

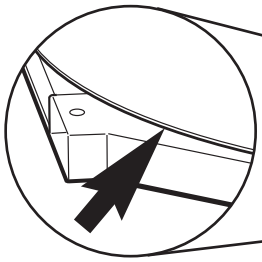

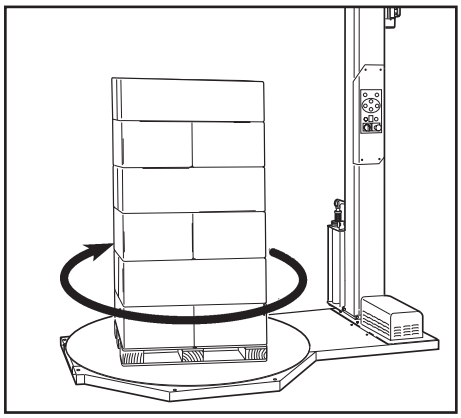

WARNING! Rotating pallet
Never touch the pallet when the machine is running.
Serious injuries may occur.

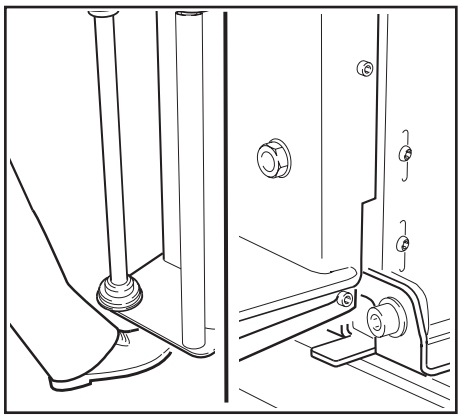

WARNING: Film reel holder
Do not remain within the raising/lowering movement range of the reel holder carriage.
A real mechanical crushing action is not possible anyhow; a mechanical stop device does not allows the carriage reaches the floor.

WARNING: Film reel holder
Do not touch the area between the film carriage and the column.

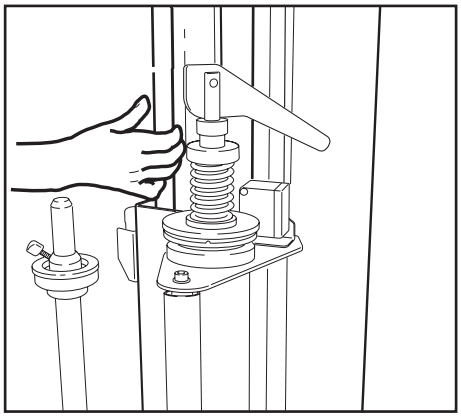

WARNING! Do not walk between the column and the pallet.
Risk of being trapped between the film and pallet.

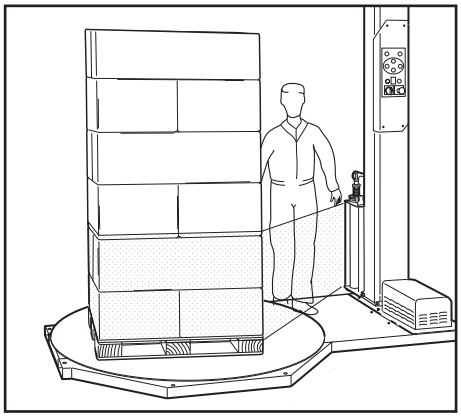

3.8 PERSONAL SAFETY MEASURES

(Safety glasses, safety gloves, safety helmet, safety shoes, air filters, ear muffs).
None is required, except when recommended by the user.

3.9 PREDICTABLE ACTIONS WHICH ARE INCORRECT AND NOT ALLOWED

- Never work without the safety protections.
- Only authorised personnel should be allowed to carry out the adjustments, repairs or maintenance which require operation with reduced safety protections.
  During such operations, access to the machine must be restricted.
  When the work is finished, the safety protections must immediately be reactivated.
- The cleaning and maintenance operations must be performed after disconnecting the electric power.
- Do not modify the machine or any part of it.
  The manufacturer will not be responsible for any modifications.
- Follow carefully the installation instructions of this manual.

SIAT S.p.A.
Via Puecher, 22 - 22078 TURATE (CO) ITALY - Tel. 02964951 - Fax 029689727 - http://www.siat.com - Email: siat@siat.com

SYMBOLS	COLOURS
DANGER AND PARTS IN MOVEMENT	YELLOW COLOUR
COMPULSORY ACTIONS/PROHIBITION	RED COLOUR
CONTROLS AND INFORMATION	LIGHT BLUE COLOUR

a Keep hands out of working parts
Serious injuries may occur.

Label code: S300109396A

b Attention! Disconnect the electric plug from the mains before any cleaning/servicing operation and before opening the electrical panel.

Label code: S300109996A

c Shows the running direction of the turntable.

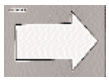

Label code: S300104096A

d Shows the danger of falling from the turntable.

Label code: S300109296B

e Shows the prohibition from stepping on the turntable.

Label code: S300109596B

f

Shows the danger of being trapped between pallet and film.

Label code: S300110196A

g

Caution! High voltage.

Label code: S300110096A

h

Show the point for earth wire connection on the machine frame

Label code: S300103996A

i

Shows the film path for film reel carriage with mechanical tensioning brake.

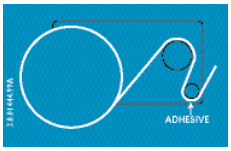

Label code: S300144499A

Shows the film path for film reel carriage with electromagnetic tensioning brake.

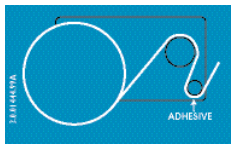

Label code: S300144499A

Shows the film path for film reel carriage with non-motorized geared pre stretch

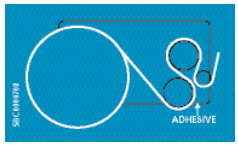

Label code: SBC0000708

Shows the film path for film reel carriage with motorized pre stretch

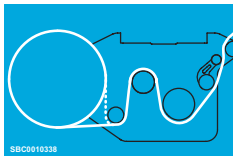

Label code: SBC0010338

l

Shows the identification data of the turntable and the column.

Label code: S340277700A

SIAT S.p.A.
Via Puecher, 22 - 22078 TURATE (CO) ITALY - Tel. 02964951 - Fax 029689727 - http://www.siat.com - Email: siat@siat.com

4-PRELIMINARY INFORMATION ON THE MACHINE

41 GENERAL DESCRIPTION OF THE MACHINE

Semi-automatic machine for the wrapping of palletised loads wiyh stretch film, adjustmentof the film tension by mechanical or electromagnetic brake or non-motorized geared pre stretch device, with adiustable turtable rotation speed. Manual or automatic cycle, adyustable number of wraps on the lower and upper parts of the pallet.

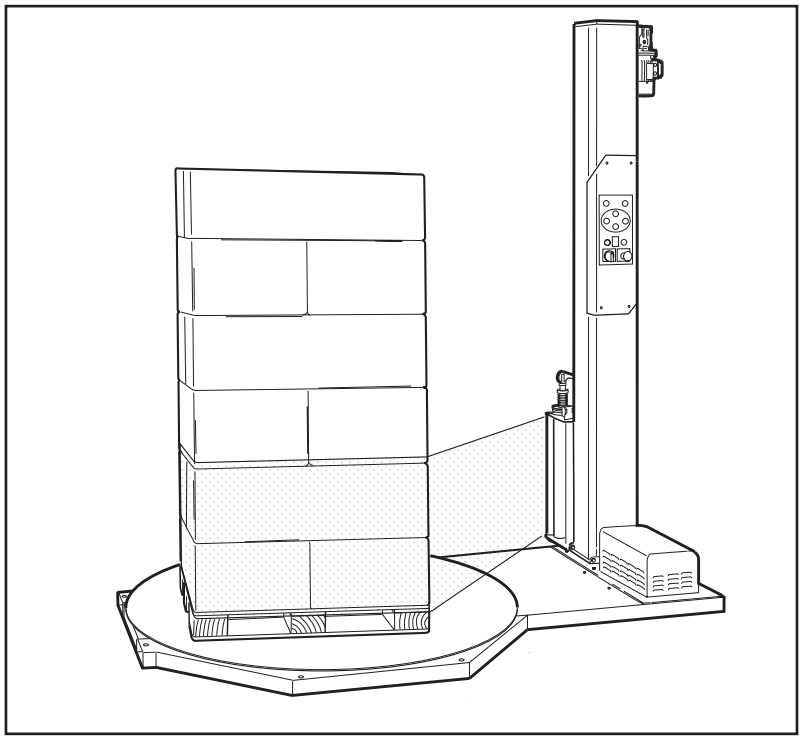

4.2 TECHNICAL SPECIFICATIONS

- Standard power supply = 115/240 1Ph 230/400/440V 50Hz 3Ph
- Turntable motor = kW 0.37
- Film carriage motor = kW 0.11
- Mechanical brake or electromagnetic brake or mechanical pre-stretch
- Max film reel diameter - 300 mm
- Film reel core diameter 75-50 mm
- Pallet dimensions: see sect. **4.3**
- Load capacity: see sect. **4.3**

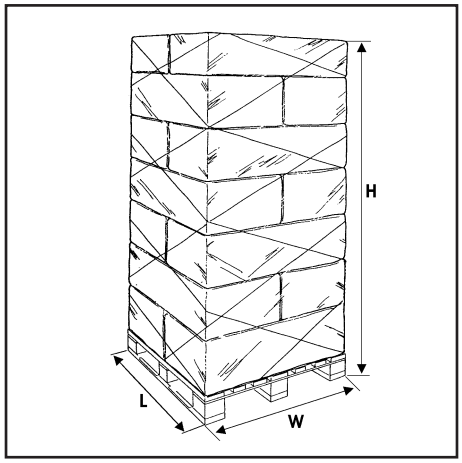

Turntable Ø mm	L mm	W mm	H mm	Max. capacity kg
1500	1200	800	2200/2500	2000
1650	1200	1000	2200/2500	2000
1800	1200	1200	2200/2500	2000

FILM ROLL DIMENSIONS

A = max 500 mm
B = max 250 mm
C = 75 mm, 75 mm, or 50 mm

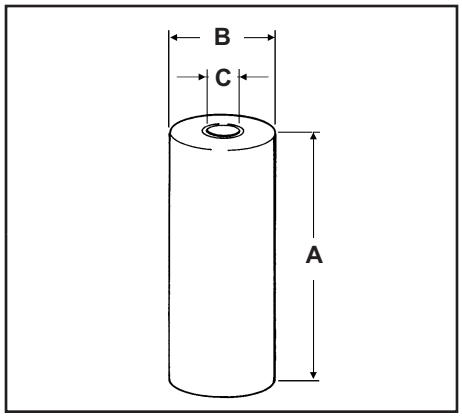

The machine supplied with the standard electrical system is not designed for use in atmospheres with risk of fire or deflagration. In such conditions the machine must be equipped with special motors and/or anti-deflagration components.

4.4 OVERALL DIMENSIONS

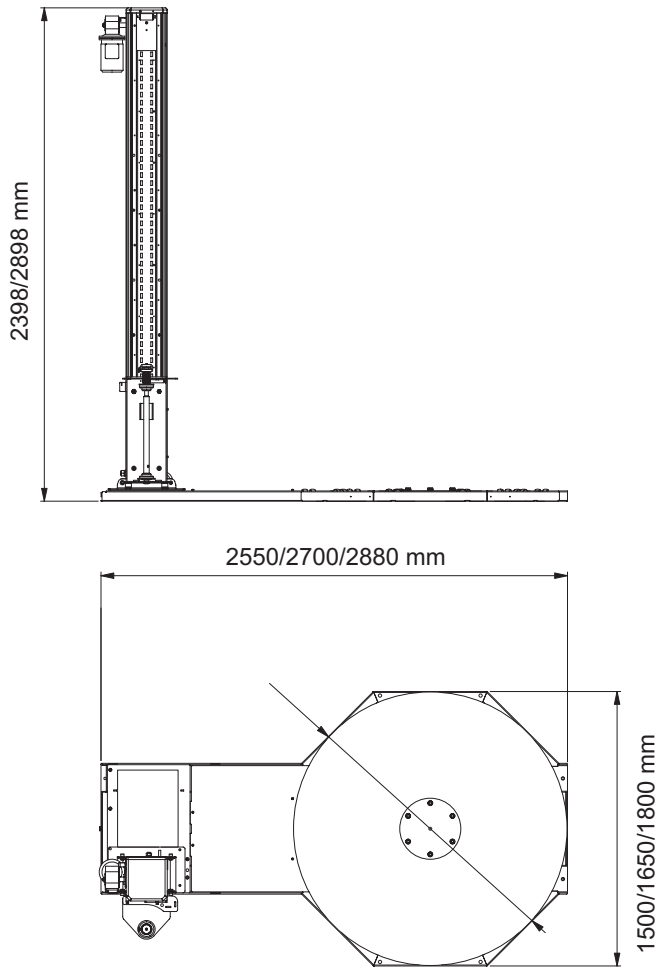

4.5 MAIN COMPONENTS

The machine is composed of:

N. 1platform, N. 1 turntable, N. 1 column, N. 1 film carriage, N. 1 control panel, N. 2 motors

For the technical features of the electrical parts refer to section **15-ENCLOSURES**

4.6 OPERATING FLOW

- the working cycle is started by pressing the START button
- the turntable starts to rotate
- the film carriage rises
- the photocell reads the maximum height of the load and stops the film carriage raising movement
- the film carriage descends
- the turntable stops

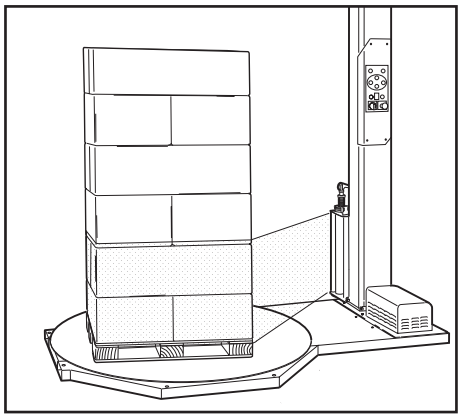

4.7 MACHINE NOISE MEASUREMENT

Acoustic pressure at 1 metre distance from the machine with the film roll inserted: 72 dB.
Acoustic pressure at a height of 1.6 metre above the machine with the film roll inserted: 72 dB.
The measurement was performed by a SPYRI-MINOPHON phonometer.

SIAT S.p.A.
Via Puecher, 22 - 22078 TURATE (CO) ITALY - Tel. 02964951 - Fax 029689727 - http://www.siat.com - Email: siat@siat.com

5-SHIPMENT - HANDLING - STORAGE

5.1 SHIPMENT AND HANDLING OF THE PACKED MACHINE

The machine is fixed to the pallet with plastic straps and can be lifted by using a forklift truck.
The packaging is suitable for travel by land, air and sea freight.

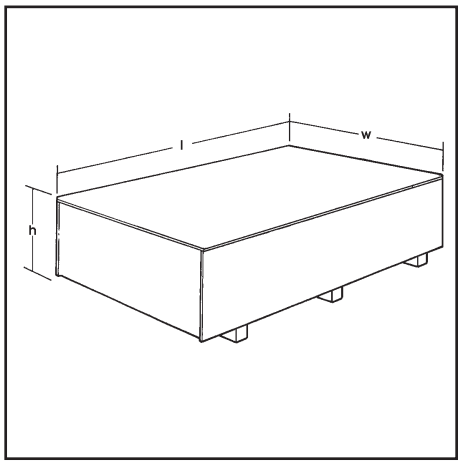

OVERALL PACKAGING DIMENSIONS
l = length 290 cm
w = width 175 cm
h = height 65 cm
Weight 580 kg

During shipment it is possible to stack a maximum of 4 machines.

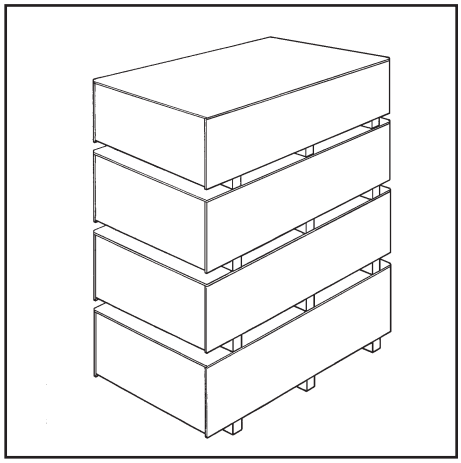

5-2 SHIPMENT AND HANDLING OF THE UNPACKED MACHINE

Never move the machine without the packaging and when assembled. The handling of the assembled machine can cause serious injuries because the column weight can unbalance the machine. Furthermore, the fixing of the column to the machine basement is unsuitable to bear the mechanical stress of transport.

5.3 STORAGE OF THE PACKED OR UNPACKED MACHINE

If the machine is to remain inactive for a long period, please take the following precautions:
-store the machine in a dry, clean place;
-if the machine is unpacked it is necessary to protect it from the dust;
-it is possible to stack a maximum of 4 machines, if they are in their original packaging.

6-UNPACKING

6.1 The envelope placed on the outside of the packaging contains the instructions on the unpacking of the machine.

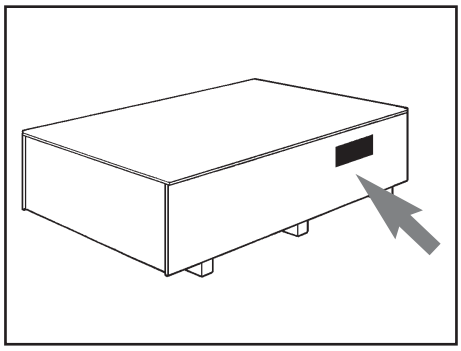

Machine layout inside the packaging.

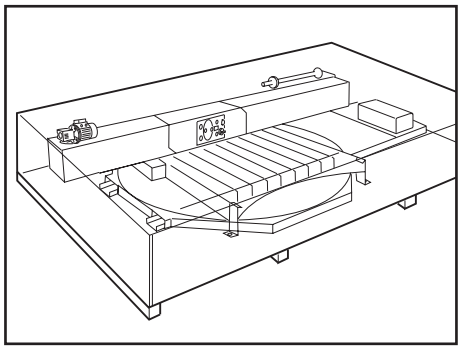

Remove nails and take off the cover of the case, using the correct tools and the protective gloves. Pay attention to the nails and wood splinters.

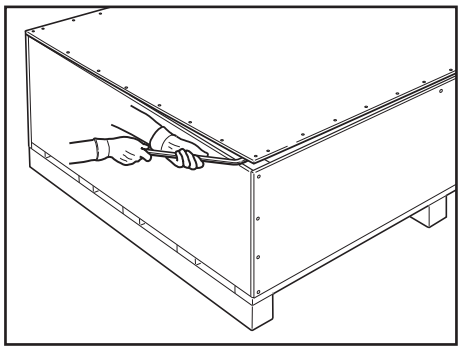

Remove the nails from the four sides of the wooden case.

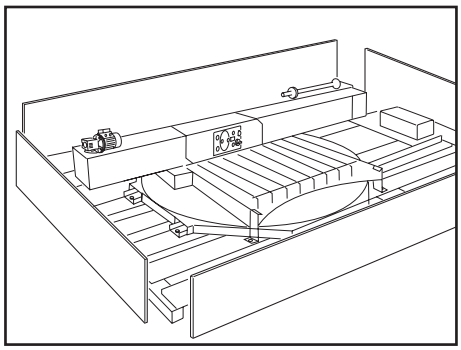

For all the others operations please follow the instructions contained in the manual.

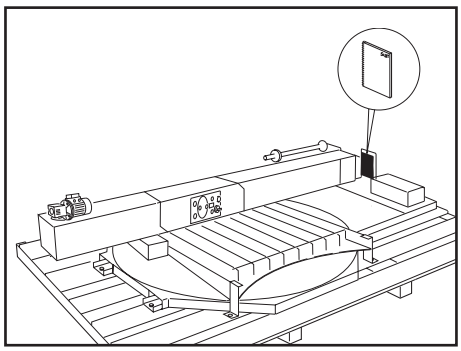

SIAT S.p.A.
Via Puecher, 22 - 22078 TURATE (CO) ITALY - Tel. 02964951 - Fax 029689727 - http://www.siat.com - Email: siat@siat.com

6-UNPACKING

Use a forklift truck to carry the machine to its working location
(Machine + pallet weight = **F1** kg 377)
Weight of machine + optionals + pallet = **F1** kg 437)

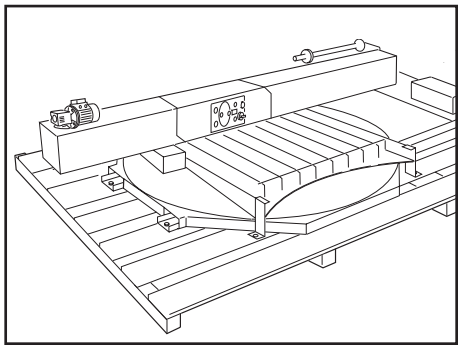

Remove the ramp (optional) - (Weight = kg 70).

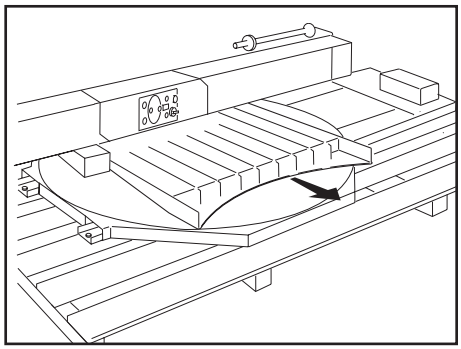

Uplift the machine with a forklift truck.

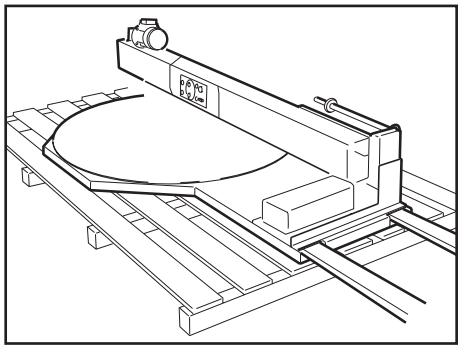

Uplift the machine with a forklift truck and remove the pallet.
(Machine weight = WS150 kg 337)

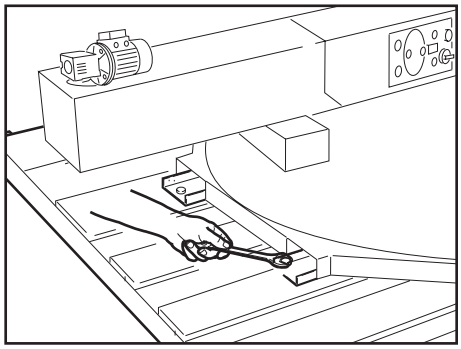

6.2 PACKAGING DISPOSAL

The packaging of the machine is consists of:
- wooden pallet
- wooden box
- wooden supports
- plastic straps (PP)

For the disposal of these materials please follow the provisions of the law in your country.

7-INSTALLATION

7.0 SAFETY MEASURES
(Read section **3** carefully).

7.1 ENVIRONMENTAL CONDITIONS REQUIRED
-Min. temperature = 5 °C; Max. temperature = 40 °C
-Min. humidity 30%; Max. humidity 80%
-Dust-free environment

7.2 SPACE REQUIRED FOR OPERATION AND MAINTENANCE
Min. distance from the wall: **A** = **1000** mm. **B** = **700** mm.
Min. height = **3600** mm.

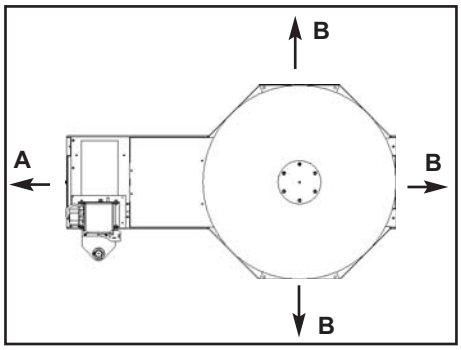

7.3 KIT SUPPLIED WITH THE MACHINE
The machine requires no special tools for installation and maintenance.
For a detailed description of the tool kit see section 13.1.

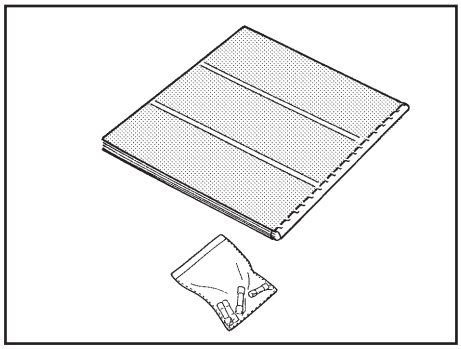

7.4 POSITIONING THE MACHINE BASE
Lift the machine wifth a forklift truck and place in the working position

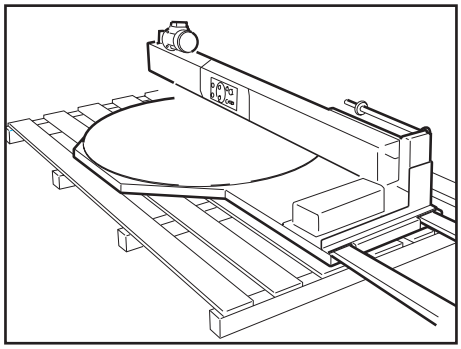

7.5 LEVELING
Set the platform on a flat surface to allow an even distribution of the weight.
Positioning on an uneven surface will result in excessive wear of the mechanical parts supporting the turntable..

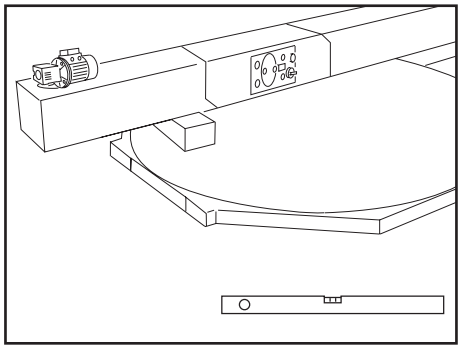

7.6 ASSEMBLY OF THE COLUMN
Remove the two screws on the base of the column.

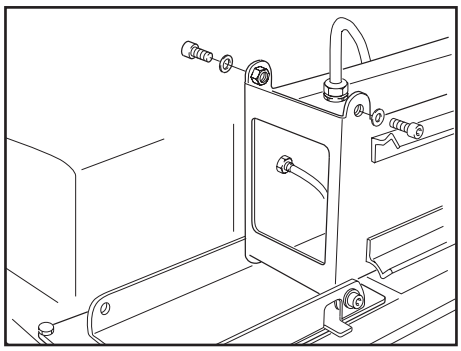

SIAT S.p.A.
Via Puecher, 22 - 22078 TURATE (CO) ITALY - Tel. 02964951 - Fax 029689727 - http://www.siat.com - Email: siat@siat.com

Lift the column till it reaches a vertical position.

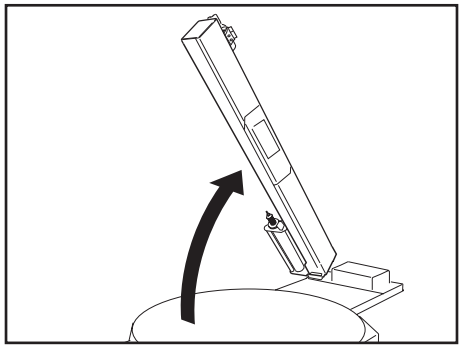

Place the two screws removed before by locking the column to the supporting plate on the turntable.

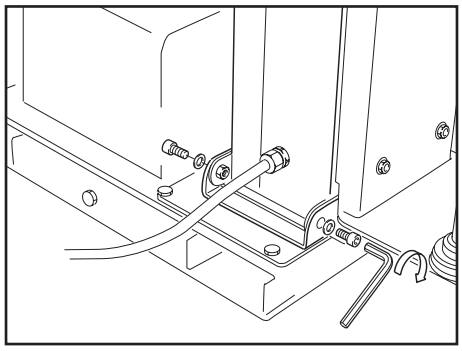

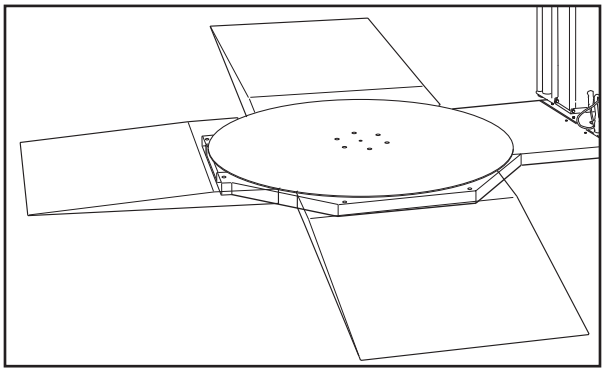

7.7 RAMP (AW- OPTIONAL)

Tighten the connector pivots of the ramp at the base of the pallet stretch wrapper. The ramp can be positioned at -90°, 0° or +90° from the column.

7.8 PRELIMINARY ELECTRICAL CHECKS

Before connecting the machine to the mains please carry out the follwing operations:

7.8.1 Make sure that the sockt is provided with an earth protection circuit.

7.8.2 Make sure that both the mains voltage and frequency meet the indications of the serial numer plate.

7.8.3 Check that the connection of the machine to the main meets the rpovisions of law and/or the safety regulations in your country.

7.8.4 Power supply = kW 1.25. The machine is fitted with a main switch with maximum breaking power of 25 A and a maximum short-circuit current of 5KA. The user will be responsible for testing the short-circuit current in its facility and should check that the short-circuit amperage allowed on the main switch of the machine is compatible with all the elements of the mains system .

7.9 MACHINE CONNECTION TO THE MAINS AND CHECKS

7.9.1 Check that the mains switch is in '**0**' position.

7.9.2 Connect cable supplied with the machine to a plug wich complies with the safety regulations in your country.

7.9.3 Connect the plug to rthe mains.

7.10 CHECK-OUT OF PHASES

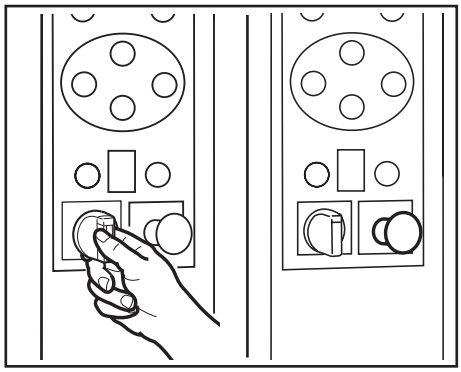

- Remove any tools left on the machine.
- Turn the main switch clockwise to '**I**' position.
- Unlock the emergency stop button on the control panel by rotating it clockwise.

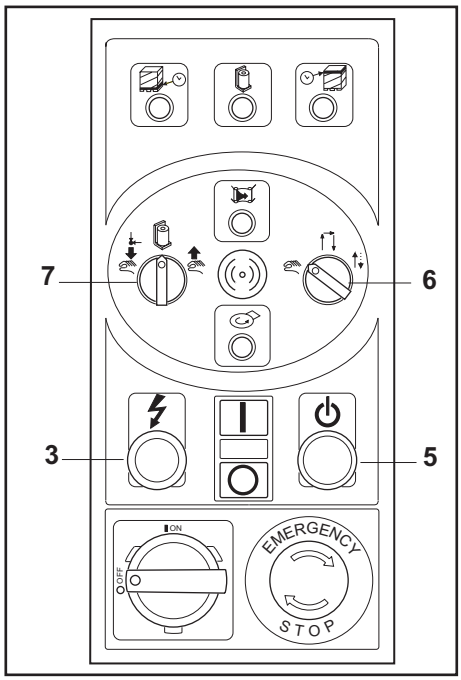

- Check the warning light **3** is on.
- Push the button **5** and check that warning light become on
- Turn the selector **6** in 'manual' position
- Turn the selector **7** and check that the carriage direction is as indicated by the arrows.

In case it is the reverse direction, invert the position of the wires on the connection plug (L1 with L2).

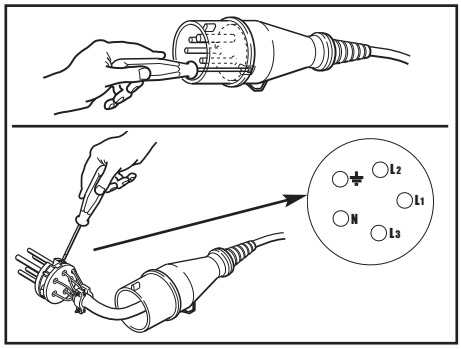

SIAT S.p.A.
Via Puecher, 22 - 22078 TURATE (CO) ITALY - Tel. 02964951 - Fax 029689727 - http://www.siat.com - Email: siat@siat.com

8-OPERATION

8.1 WORKING CYCLE DESCRIPTION

- Position the pallet on the turntable.
- Place a film reel on the carriage and thread the film as shown in section 11.1.
- Bind the film to the pallet.
- Release the EMERGENCY STOP button by turning it clockwise.
-Select the wrapping cycle as required; see paragraph **12.3**.
-Push the start button.
-The machine will wrap a fully working cycle..
-At the cycle end the pallet will stop.
-Tagliare il film e rimuovere il pallet.

8.2 OPERATING MODES

The pallet wrapper is able to operate:

a) ‘manual’ cycle;

b) ‘automatic cycle’ (double wrapping with carriage raising and lowering)

c) ‘automatic’ cycle (single wrapping with carriage raising only).

8.3 EMERGENCY STOP

The lockable emergency stop button is located on the control board.

8.4 NON-EMERGENCY SWITCH OFF

Press button stop cycle.
Turn the main switch anticlockwise to the **0** position

9-CONTROL PANEL

9.1 PANEL

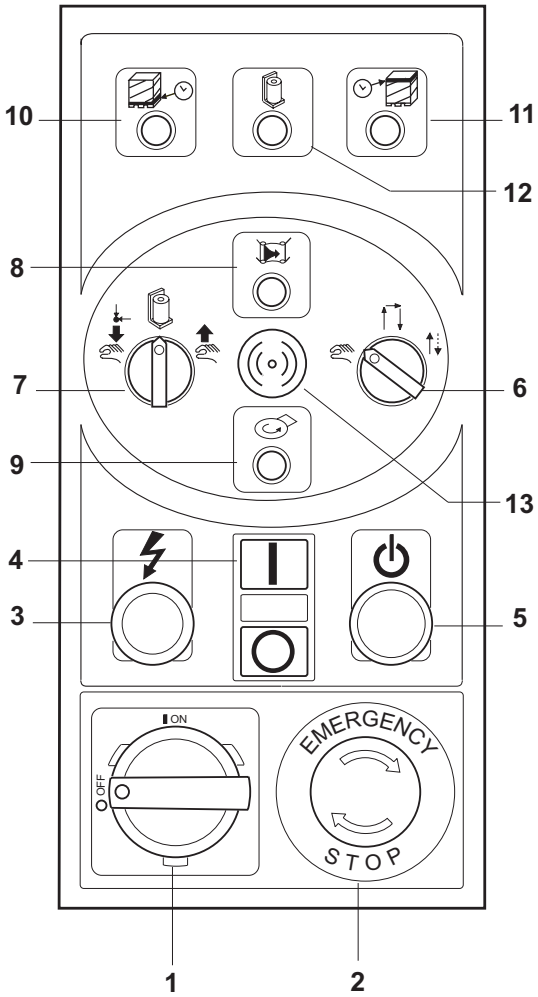

1. MAIN SWITCH
Turn clockwise to 'I' position to power on

2. EMERGENCY STOP
When pressed it stops the machine at any point of the working cycle (the button maintain its position; to release it turn clockwise)

3. VOLTAGE WARNING LIGHT
When goes on there is voltage inside the panel.

4. START-STOP BUTTONS
The button (I) when pushed, in 'automatic' working cycle (with selector **6** in central position or turned on the right) start the working cycle.
The button (O) when pushed, in 'manual' working cycle (selector **6** turned on left) start the turntable rotation only

Pushing the button ON the acoustic device (13) is activated for about 5 seconds before the wrapping cycle start.

5. SET-UP PUSHBUTTON
When pushed (warning light goes on) the button enable all the electrical components of the control panel
The button must be pushed at first start and after an emergency stop **2** or action on safety device.

6. MANUAL-AUTOMATIC SELECTOR SWITCH
Turned as required select the working cycle (manual-automatic with carriage raising and lowering and automatic with carriage raising only.

7. 'RESET' AND 'RAISING-LOWERING' SELECTOR SWITCH
Turned and keept in its position, in 'manual' working cycle, cause the carriage to rise or to lower.
Turned to left, in 'automatic' working cycle, allow the 'reset' of the machine.
The 'reset' must be done at first start and after an emergency stop **2** or action on a safety device.

8. ELECTROMAGNETIC BRAKE ADJUSTMENT (if installed)
On the models with electromagnetic brake it adjust the tension of the reel holder film carriage.

9. TURNTABLE ROTATION ADJUSTMENT
It adjust the speed of the turntable and consequently, more we increase the speed, more film is attached on the pallet.

10. PALLET BOTTOM WRAPPING TIME
It adjust the stop time of the carriage on the bottom of the pallet.

11. PALLET TOP WRAPPING TIME
It adjust the stop time of the carriage on the top of the pallet.

12. CARRIAGE ASCENT-DESCENT SPEED ADJUSTMENT (if installed)

13. START ACOUSTIC DEVICE (if installed)
Pushing the button ON (4) the acoustic device is activated for 5 seconds before the cycle start.

SIAT S.p.A.
Via Puecher, 22 - 22078 TURATE (CO) ITALY - Tel. 02964951 - Fax 029689727 - http://www.siat.com - Email: siat@siat.com

10-SAFETY DEVICES OF THE MACHINE

10.1 EMERGENCY STOP BUTTON

The machine is fitted with an emergency stop button, located on the control panel.

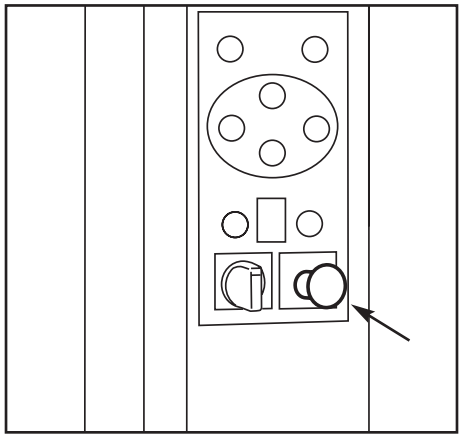

10.2 CARRIAGE BOTTOM SAFETY LIMIT SWITCH (1)

If the limit switch is activated all the drivings are disactivated

CARRIAGE DROP LIMITING DEVICES (2)

In case of failure of the lower carriage limit switch limits the descent of the carriage to 50 mm from the floor.

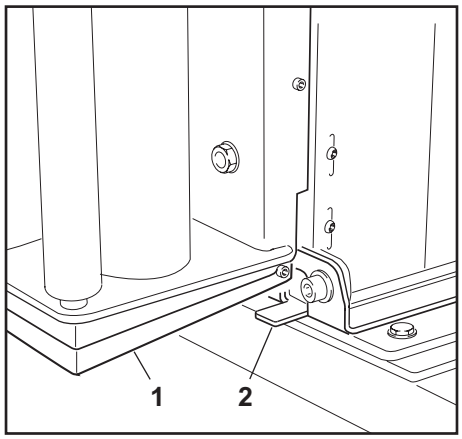

10.3 MECHANICAL FILM CARRIAGE FALL PROTECTION

This safety device lock the carriage in position on the column in the event of breakage of the raising belt.

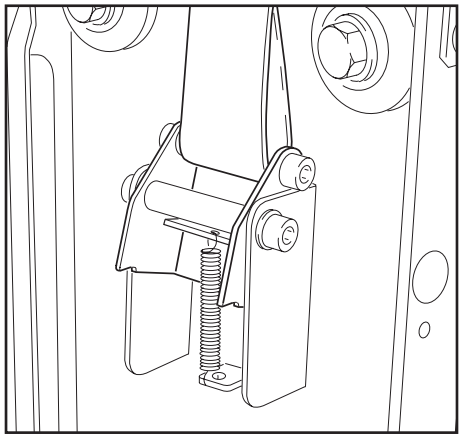

10. BELT TENSION CONTROL

In case of belt breeakage or loosening further of the intervention of the mechanical film carriage fall protection (see paragraph 10.3) the column motor reaction arm act a microswitch that cut-off all the operations in function.

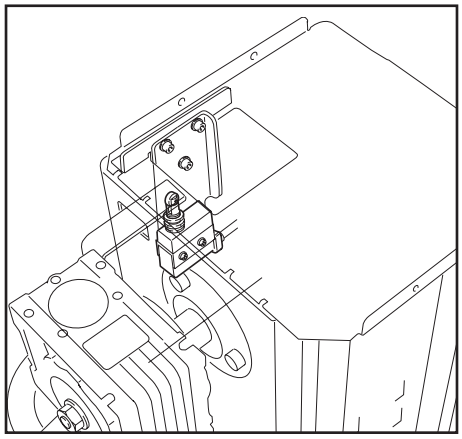

11.1 FILM THREADING

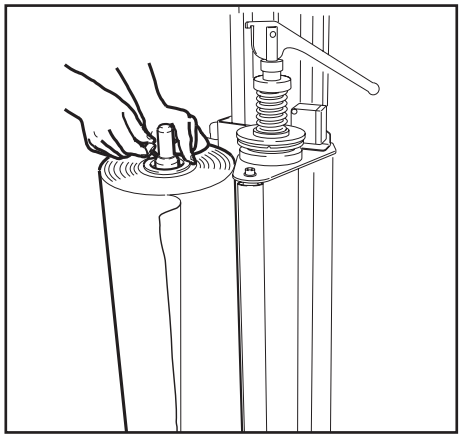

FILM REEL CARRIAGE WITH MECHANICAL BRAKE

Position a reel of film on the reel holder and fix it in place with the locknut as shown in
the drawing.
Maximum reel diameter: 300 mm
Maximum film height: 500 mm

Release the brake of the rubber by the lever.

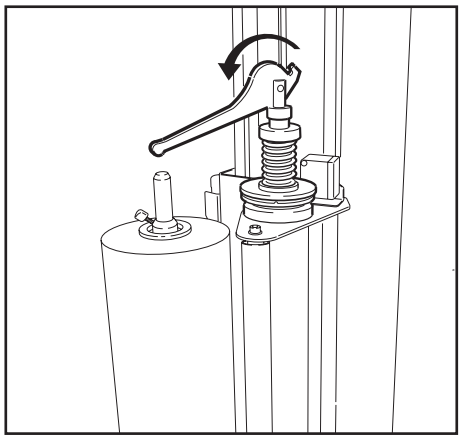

Thread the film as shown on the label located on top of the film carriage.

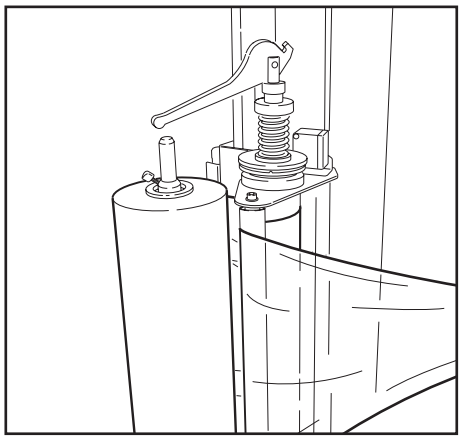

Note: Most strechable films have an adhesive side. Make sure that this side is positioned as in the drawing. If the film reel is wound with the adhesive side inwards, reverse it and use the threading route shown by the broken line in the drawing.

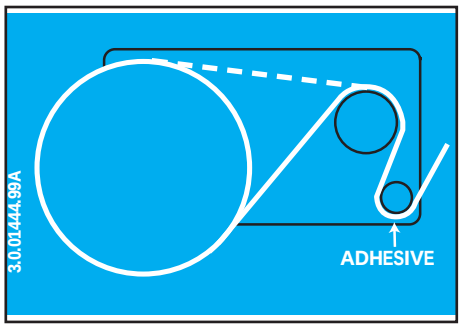

Lock the lever of the brake in the horizontal position.

SIAT S.p.A.
Via Puecher, 22 - 22078 TURATE (CO) ITALY - Tel. 02964951 - Fax 029689727 - http://www.siat.com - Email: siat@siat.com

FILM REEL CARRIAGE WITH ELECTROMAGNETIC BRAKE

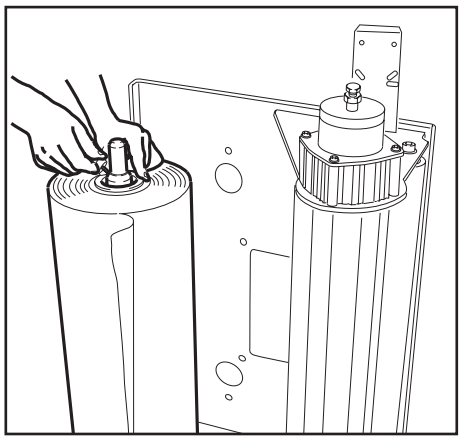

Position a reel of film on the reel holder and fix it in place with the lock-nut as shown in the drawing.
Maximum reel diameter: 300 mm
Maximum film height: 500 mm

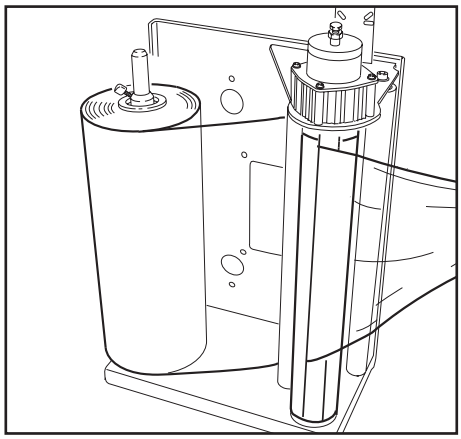

Thread the film as shown on the label located on top of the film carriage.

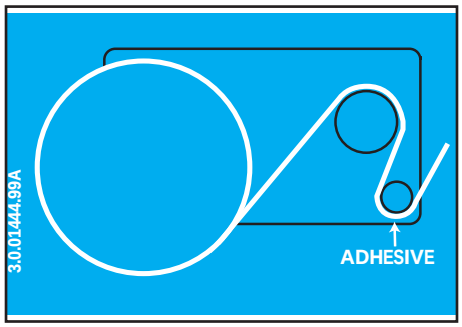

Note: Most strechable films have an adhesive side. Make sure that this side is positioned as in the drawing. If the film reel is wound with the adhesive side inwards, reverse it and use the threading route shown by the broken line in the drawing.

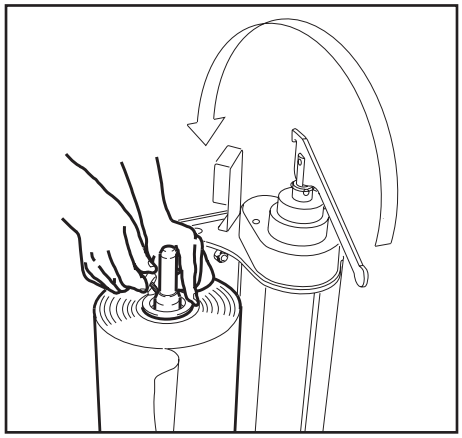

FILM REEL CARRIAGE WITH NON-MOTORIZED GEARED PRE STRETCH

Position a reel of film on the reel holder and fix it in place with the lock-nut as shown in the drawing.
Maximum reel diameter: 300 mm
Maximum film height: 500 mm

Release the brake of the rubber by the lever.

Thread the film as shown on the label located on top of the film carriage.

Lock the lever of the brake in the working position.

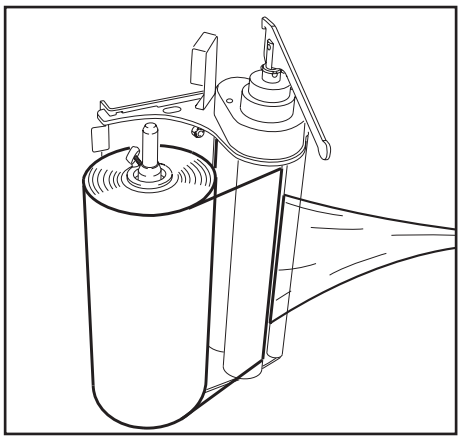

Note: Most strechable films have an adhesive side. Make sure that this side is positioned as in the drawing. If the film reel is wound with the adhesive side inwards, reverse it and use the threading route shown by the broken line in the drawing.

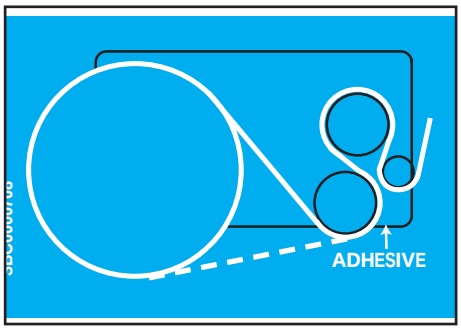

FILM REEL CARRIAGE WITH MOTORIZED PRE STRETCH

Position a reel of film on the reel holder.
Maximum reel diameter: 300 mm
Maximum film height: 500 mm

Open the carriage guard and thread the film as shown on the label located on top of the film carriage.

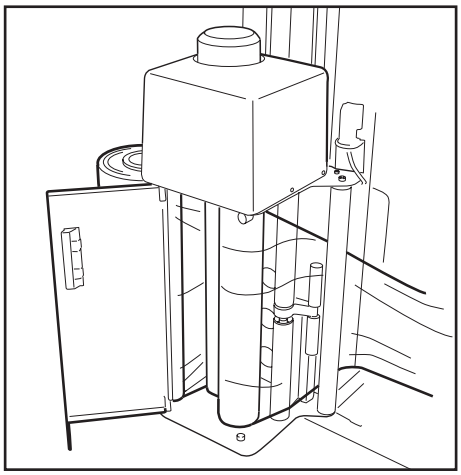

Note: Most strechable films have an adhesive side. Make sure that this side is positioned as in the drawing. If the film reel is wound with the adhesive side inwards, reverse it and use the threading route shown by the broken line in the drawing.

Close the carriage guard; as the machine will not operate if this is open.

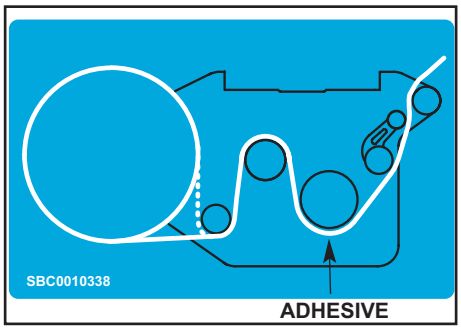

SIAT S.p.A.
Via Puecher, 22 - 22078 TURATE (CO) ITALY - Tel. 02964951 - Fax 029689727 - http://www.siat.com - Email: siat@siat.com

12-OPERATION

12.1 CHOICE OF AUTOMATIC OR MANUAL MOde

12.2 MANUAL OPERATION

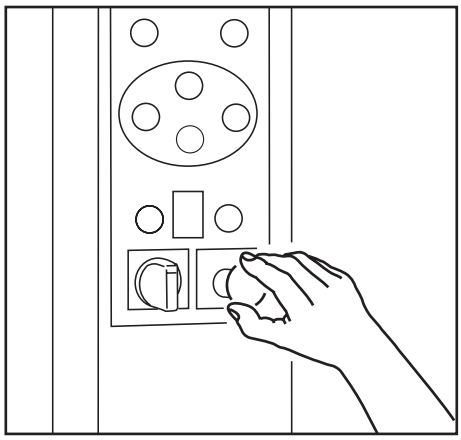

- Press the Emergency Stop button;
- position a pallet centrally on the platform;
- release the Emergency Stop button by turning it clockwise.

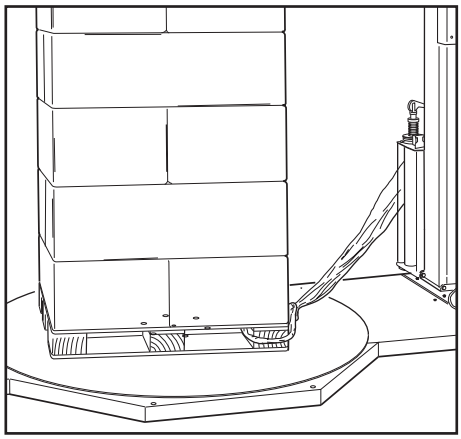

- Secure the film to the pallet as shown in the figure

- Push button **5.**

- Select 'manual' cycle; turn the selection to position

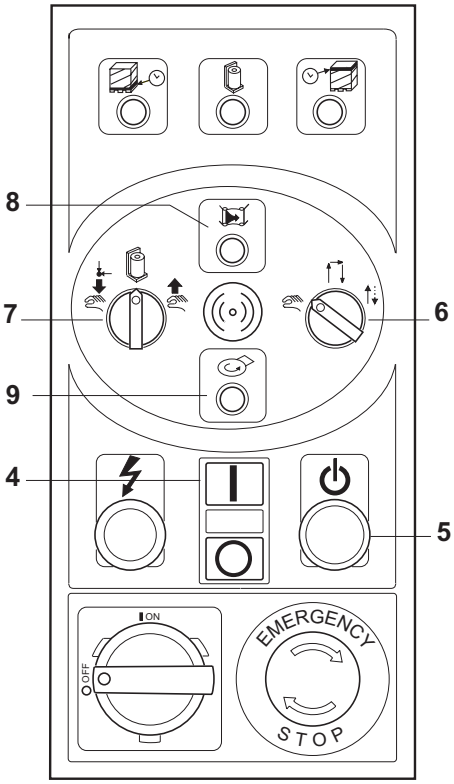

- Push button **4** (I) to start the turntable rotation.

- Adjust the film tension tightening or releasing the ring nut on the brake of the rubber or by the potentiometer **8** of the electromagnetic brake.

- Optimize the turntable rotation by the potentiometer **9**.

- Turn to right and keep in position the selector **7** to start the film carriage ascent; release the selector when reached the desired height.

- Turn to left and keep in position the selector **7** to start the film carriage descent; release the selector when reached the desired height.

- Push button **4** (O) to stop the turntable rotation

- Cut the film and remove the pallet.

12.3 WORKING IN AUTOMATIC MODE

- Push button **5**.

- Select the working cycle turning the selector 6 to position
  or

- Push start button **4** (I)

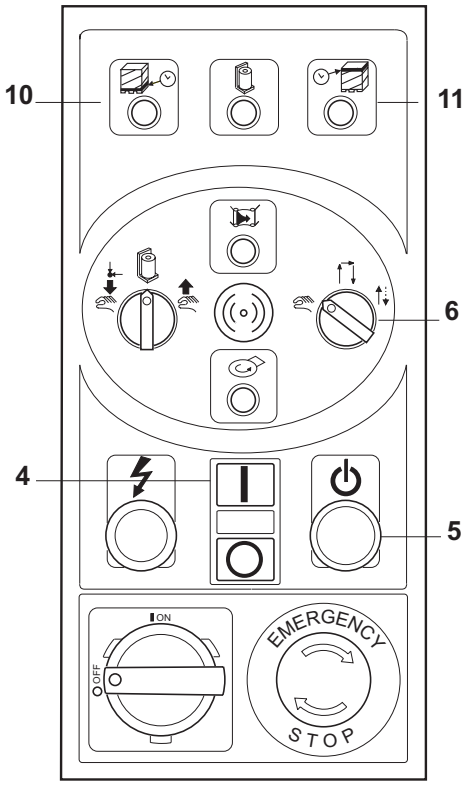

12.4 PALLET BOTTOM WRAPPING TIME
Set as required with the timer 10.

12.5 TOP BOTTOM WRAPPING TIME
Set as required with the timer 11.

12.6 CORRECT OPERATOR WORKING POSITION
The correct operator working position is in front of the control panel during the entire pallet wrapping cycle.

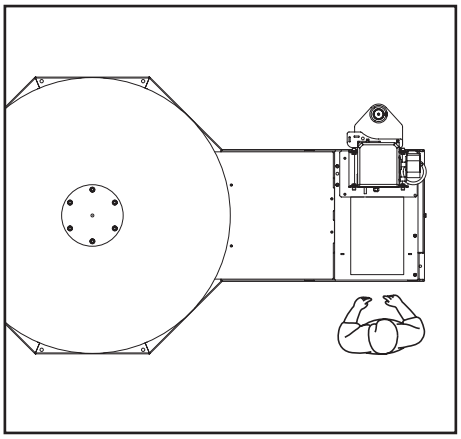

12.7 MANUAL OPERATING MODE
(See section **12.1**)

12.8 AUTOMATIC OPERATING MODE
(See section **12.3**)

12.9 START-UP
- Set the main switch to position I
- Release the emergency stop button
- Press the START button
- Press the STOP button to stop the plaform rotation.

12.10 PRODUCTION START-UP
- tie the film to the pallet
- press the START button

12.11 FILM REEL REPLACEMENT
Operator qualification 1
- press the emergency stop button;
- replace the reel;
- thread the film as shown in section 11.1.
- release the emergency stop button

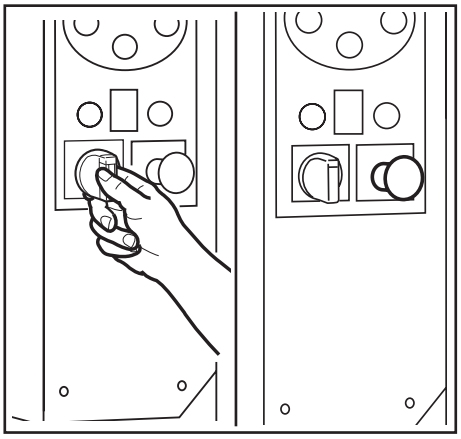

SIAT S.p.A.
Via Puecher, 22 - 22078 TURATE (CO) ITALY - Tel. 02964951 - Fax 029689727 - http://www.siat.com - Email: siat@siat.com

Machine with perimetrical safety protection and safety photoelectric barrier - (OPTIONAL)

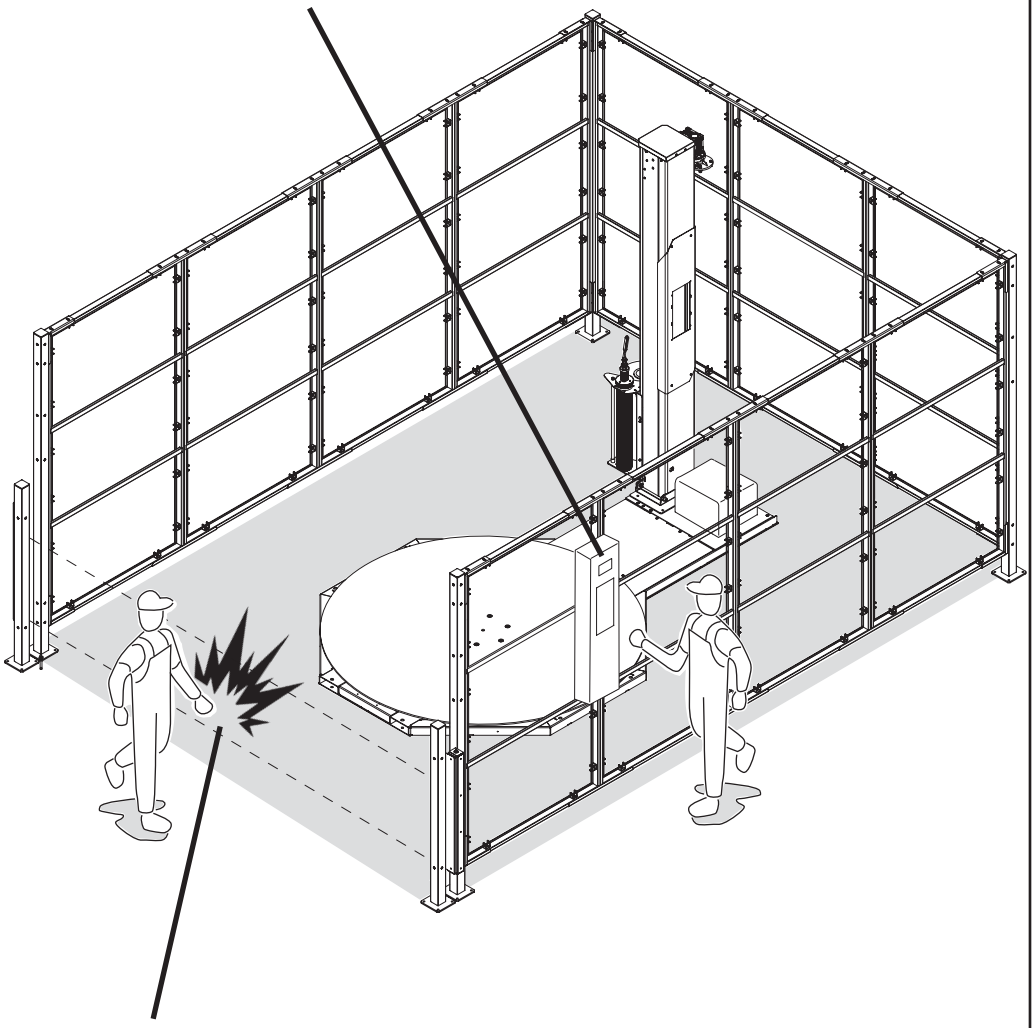

If the safety photoelectric barrier is activated proceed as follow:

- push auxiliary button **5**;
- turn selector **7** on “reset” position, restoring the initial conditions
- push putton ON **4** to re-start the working cycle

12.12 CLEANING

Operator qualification **1**

Before carrying out any cleaning or maintenance operations, set the main switch to position 0 and remove the power supply plug.
Use dry cloths or light cleansing solutions. Do not use water or solvents

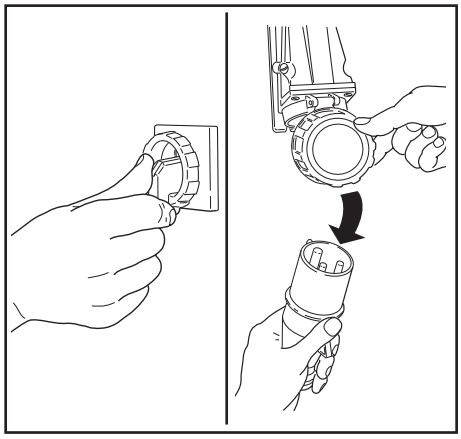

12.13 TABLE OF ADJUSTMENTS

OPERATION	OPERATOR QUALIFICATION	CHAPTER
Film reel change	1	11.1
Automatic or manual working cycle choice	1	12.1
Manual; mode operation	1	12.1
Automatic mode operation	1	12.2

12.14 SAFETY EFFICIENCY CHECK

-Emergency stop button.

SIAT S.p.A.
Via Puecher, 22 - 22078 TURATE (CO) ITALY - Tel. 02964951 - Fax 029689727 - http://www.siat.com - Email: siat@siat.com

12-OPERATION

SITUATION	CAUSE	SOLUTION
By pressing the START button the turntable not turn.	*The Emergency Stop button is pressed. Fuse. Bel tension control limit switch Turntable or carriage engine thermal protection.*	*Unlock by turning clockwise. Replace it. Check and replace Put it back in operation.*
The turtable turns but the carriage does not go up.	*System selector in manual position. Carriage engine thermal protection.*	*T urn to automatic position Put it back in operation*
At the end of the cycle the turtable does not stop.	*Limit switch not in place*	*Check and replace*
The carriage does not stop at the top of the pallet	*Photocell*	*Adjust the sensitivity*
The carriage puts too much film on the lower part of the pallet.	*Low wrapping timer*	*Adjust or replace*
The carriage puts too much film on the upper part of the pallet	*Higt wrapping timer*	*Adjust or replace*
The turtable disc does not turn evenly and/or it stops	*The chain is too loose*	*Adjust the chain stretcher*
The film slips on the rubber-coated roller of the electromagnetic brake	*Dirty rubber-coated roller*	*Clean with alcohol*
Abnormal noise	*Loose chain One or more Wheels under the turntable are broken due to wer Worn out turtable motoreducer*	*Adjust the tensioning or replace the chain Replace the rolls Replace the reducer*

13-MAINTENANCE AND REPAIRS

13.0 SAFETY MEASURES

(see section 3)

Carrying out maintenance and repairs may imply the need to work in dangerous situations. This machine has been designed with reference to the standards EN292 NOV. 92/6.1.2 and EN292/2 NOV. 92/5.3.

Only qualified technicians will be allowed to perform maintenance and repair work on the machine.

13.1 TOOL AND SPARE PARTS SUPPLIED WITH THE MACHINE

N. 1 Instruction and spare parts manual (part. code SMD00004K)
N. 3 0,25 amp fuse (part. code 3.0.06261.00A)
N. 3 8 amp fuse (part. code 3.0.03347)

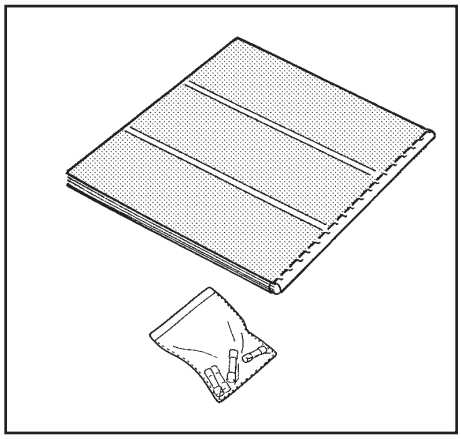

13.2 TYPE AND FREQUENCY OF CHECKS AND MAINTENANCE OPERATIONS

OPERATIONS	FREQUENCY	OPERATOR'S SKILL
Chain lubrication	Quarterly	**2**
Cleaning	Monthly	**1**
Safety devices check	Weekly	**1**
Film carriage raising belt wear check	Weekly	**1**
Rubber-coated roller cleaning	Monthly	**1**

13.3 CHECKS TO BE PERFORMED BEFORE AND AFTER EVERY MAINTENANCE OPERATION

Before every maintenance operation press the OFF button on the main switch and disconnect the plug from the control panel.

During the maintenance operation only the operator responsible for this duty should work on the machine.

At the end of every maintenance operation check the safety devices.

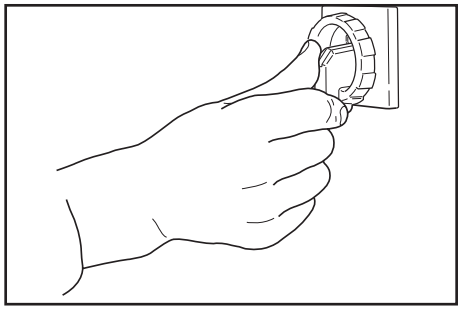

13.4 SAFETY DEVICES CHECK

- Lockable Emergency stop button

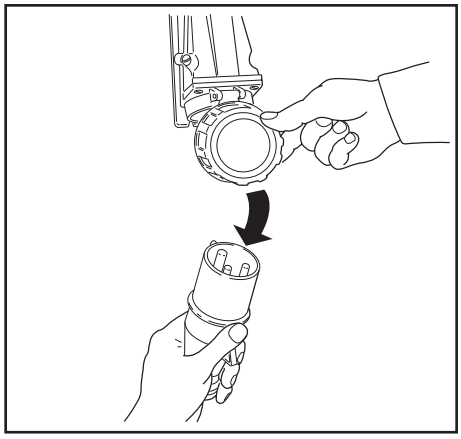

SIAT S.p.A.
Via Puecher, 22 - 22078 TURATE (CO) ITALY - Tel. 02964951 - Fax 029689727 - http://www.siat.com - Email: siat@siat.com

13.5 CHAIN LUBRICATION

Remove the protective cover.

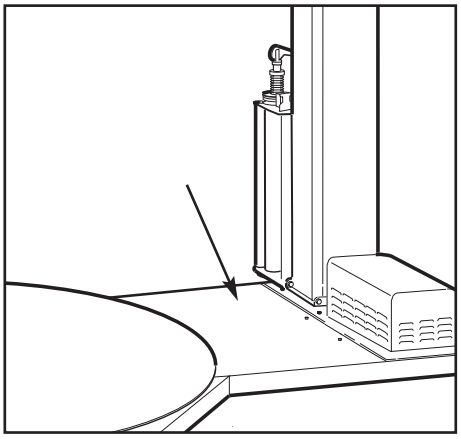

Lubrificate with chain grease.

Return the cover and fix in place.

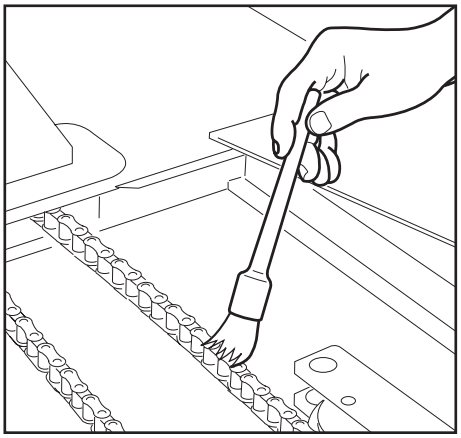

13.6 FILM CARRIAGE GUIDES

Lubricate using B.C. 190 HEAVY DUTY type grease.

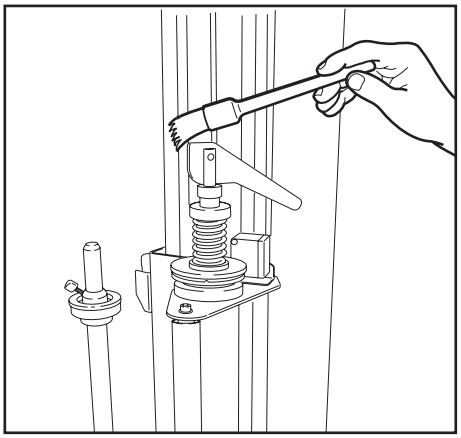

13.7 CLEANING THE RUBBER-COATED ROLLERS

Certain brands of stretchable film are keen to form a deposit of oily silicon on the rubber rollers.
If the film slips on the rubber-coated roller, clean the rubber surface with alcohol to restore the normal adhesion between roller and film.

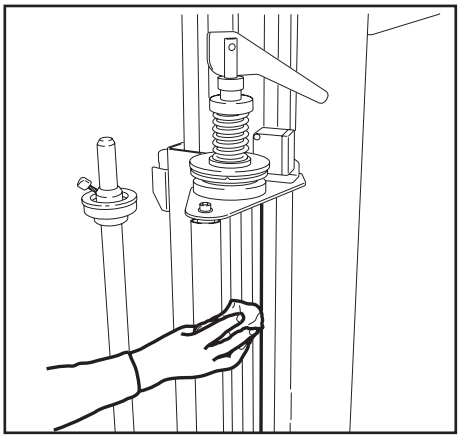

13.8 PHOTOCELL ADJUSTMENT

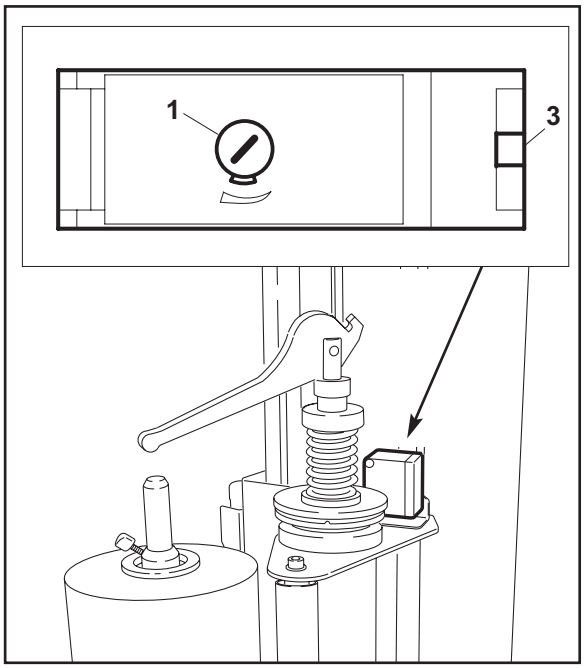

1. Sensitivity adjustment trimmer
2. Delay adjustment trimmer
3. output energized indicator

-Using a flat-headed screwdriver, adjust the sensitivity trimmer **1** so that the green warning light **3** is on to indicate the presence of a pallet on the turntable

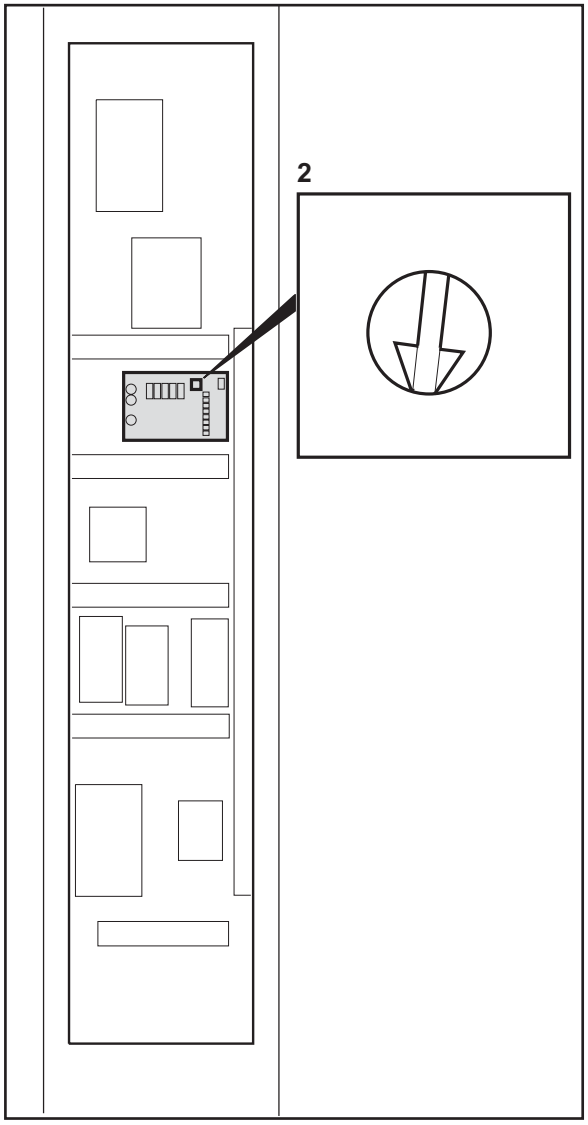

-Set up trimmer **2** (electronic card inside the control panel) with a screwdriver to increase or decrease the intervention delay of the magic eye, getting in this way one more winding wrapping on the top side of the pallet.

SIAT S.p.A.
Via Puecher, 22 - 22078 TURATE (CO) ITALY - Tel. 02964951 - Fax 029689727 - http://www.siat.com - Email: siat@siat.com

13.9 CLEANING OF RUBBER ROLLER FRICTION (Carriage with mechanical brake)

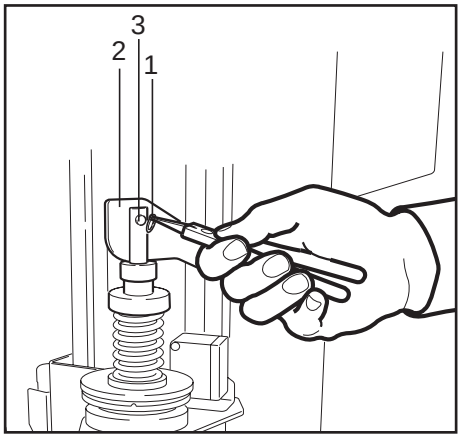

Set the main switch on position **O**.
- Remove the snap ring **1**.
- Remove the pin **2**.
- Remove the lever **3**.

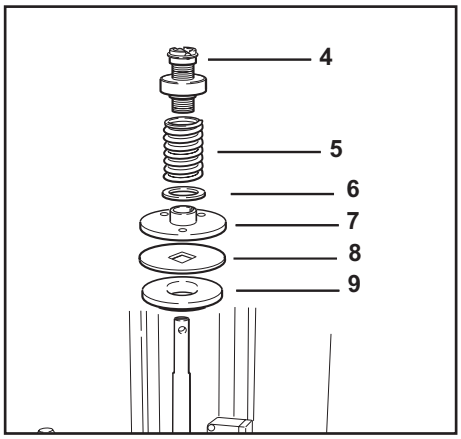

- Remove the bushing **4**, the spring **5**, the washer **6**.
- Remove the plate **7**, the friction **8** and the contrast **9**.

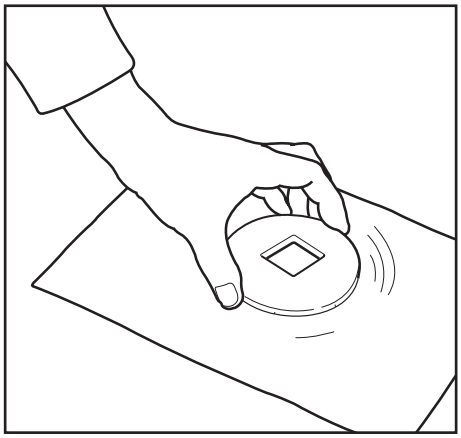

- Clean the friction.
- Lay the friction on a sheet of sandpaper, rotate gently the support with the friction in order to remove the patina.

13.10 CLEANING OF RUBBER ROLL FRICTION (Carriage with electromagnetic brake)

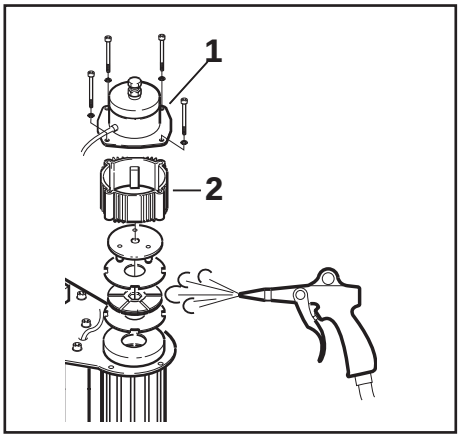

-Unscrew the four screws and lift up the magnet-holder block **1.**
-Lift the brake sleeve **2**.
-Clean the friction by an air compressor or eventually replace it.

13.10 REPLACEMENT OF THE EXTRUDED ROLLER GASKETS (Carriage with mechanical brake))

- Remove the snap ring **1.**
- Remove the pin **2**.
- Remove the lever **3**.
- Remove the bushing **4**, the spring **5** and the support **6**.
- Remove the brake disk **7** and the contrast **8**.
- Unscrew and remove the screws **9**.
- Remove the plate **10**.

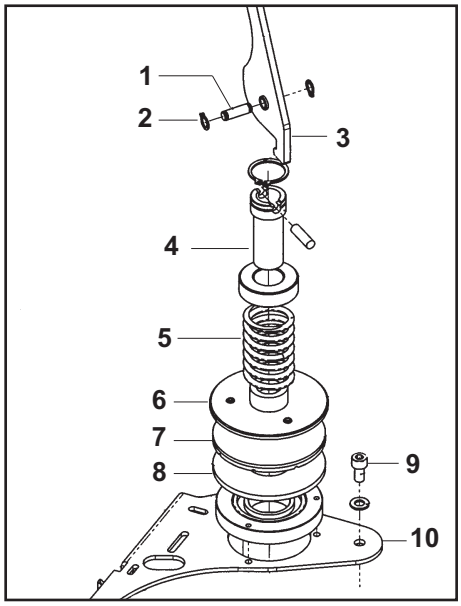

13.10 REPLACEMENT OF THE EXTRUDED ROLLER GASKETS (Carriage with electromagnetic brake)

Disconnect the Klingen plug from its outlet.
- Unscrew the four screws **1**.
- Lift the magnet-holder block **2**.
- Extract all the components of the brake group **3** (disc, friction, friction holder).
- Lift the extruded roller **4**.
- Unloose the screws and lift the brake holder plate **5**.
- Extract the elastic ring **6**.
- Take off the washer **7**.

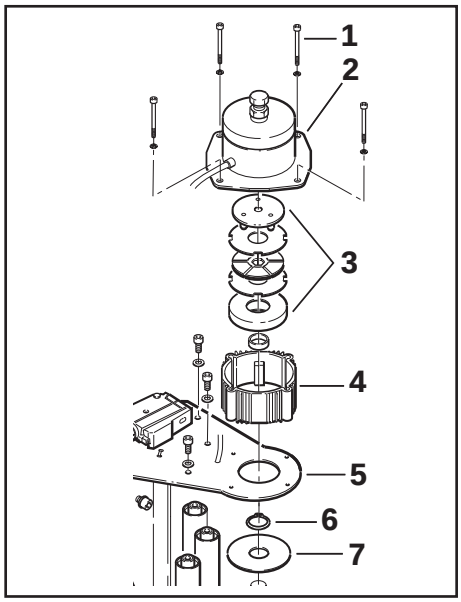

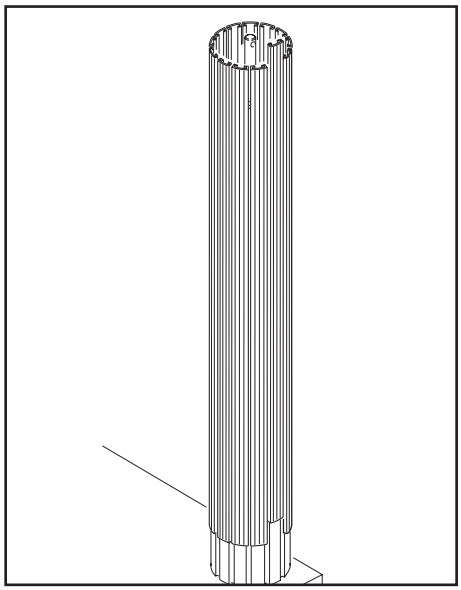

SIAT S.p.A.
Via Puecher, 22 - 22078 TURATE (CO) ITALY - Tel. 02964951 - Fax 029689727 - http://www.siat.com - Email: siat@siat.com

13.11 REPLACEMENT OF THE PRE-STRETCH GEARS

To substitute dissassemble all components until you reach the gears 1, 2

The gears must be coupled following the table shown below.

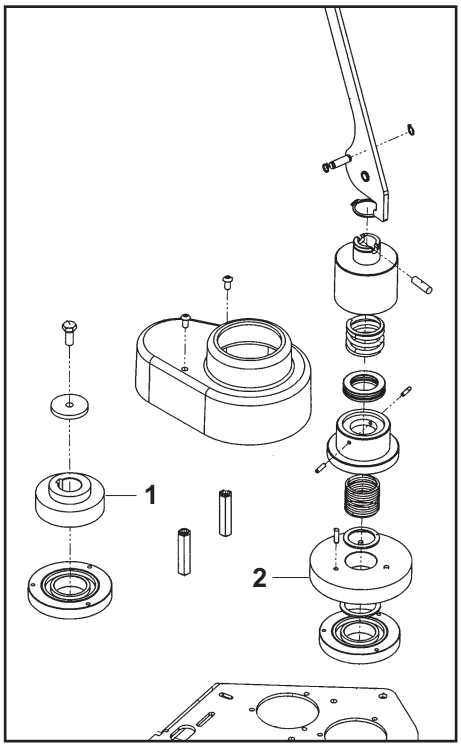

Pre-stretch percentage as required (%)	n. teeth gear 1 (Z)	n. teeth gear 2 (Z)
30	**39**	**51**
60	**35**	**55**
90	**30**	**60**

13.12 REPLACEMENT OF TURNTABLE RUNNING WHEELS

Remove the six turntable locking screw.

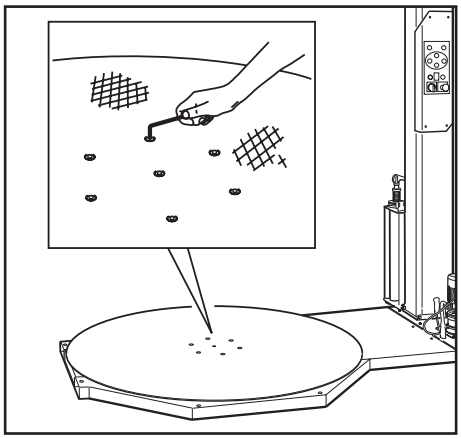

Push the turntable on the forks of a transpallet.

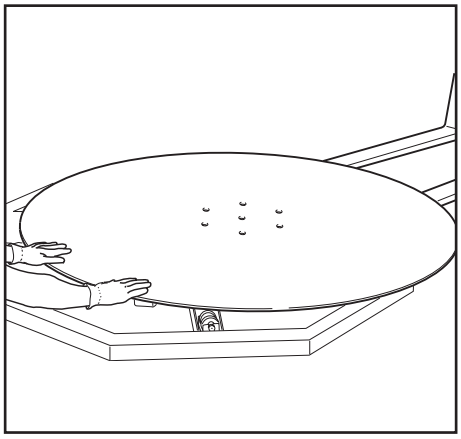

Remove the wheel group upwards from its U-shaped housing.

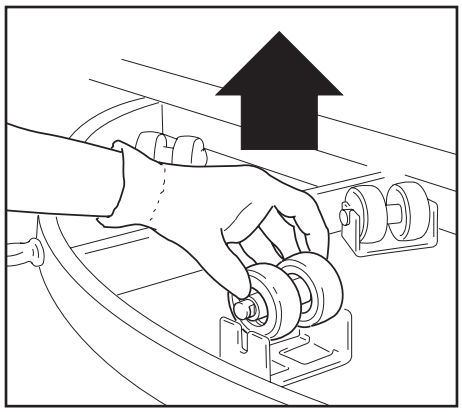

- Remove the shaft **1** and recover the spacers **2** and **3**.
- Replace the damaged wheels.
  Use only original spare parts.
- Reassemble everything inserting the shaft **1** into the two wheels **4** with the longest spacer **2** at the centre and the two shortest ones **3** at the sides of the two wheels.

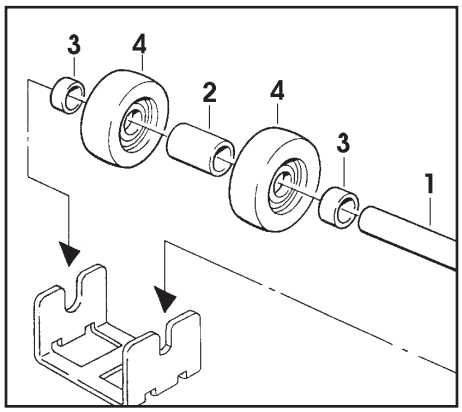

Be particularly careful in repositioning the shaft with the wheels inserting the notches of the shaft into the runner.

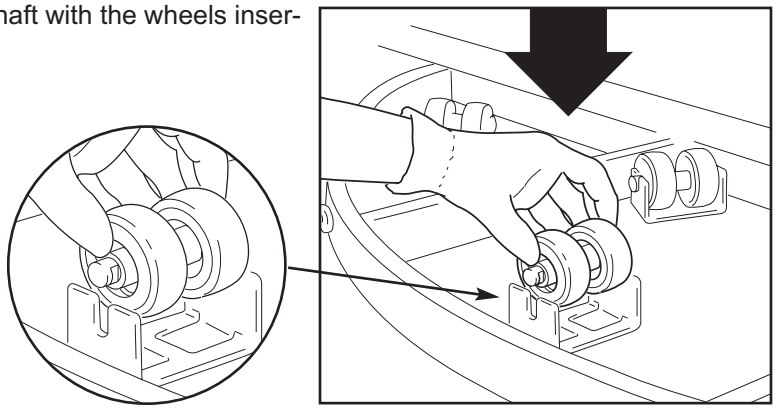

13.13 CHAIN TENSION

Loosen the locking screws **1** of the motor support plate and act as necessary on the adjustment screw **2**.

After have done retighten locking screws **1**.

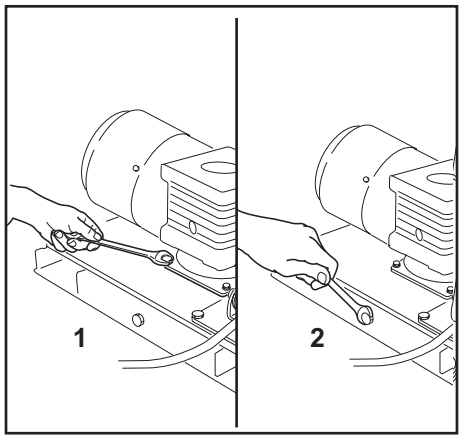

SIAT S.p.A.
Via Puecher, 22 - 22078 TURATE (CO) ITALY - Tel. 02964951 - Fax 029689727 - http://www.siat.com - Email: siat@siat.com

13.14 REPLACEMENT OF THE CARRIAGE BELT

With the reel holder carriage completely down, carry on the column in horizontal position.

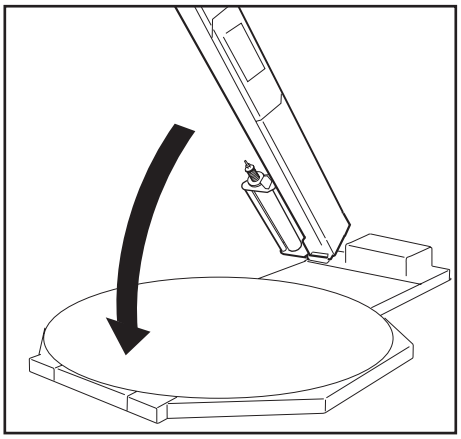

Loosen the fairlead on the column and extract the cable as necessary.

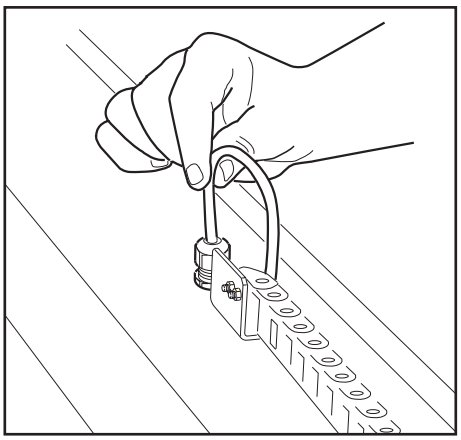

Release the cable holder chain.

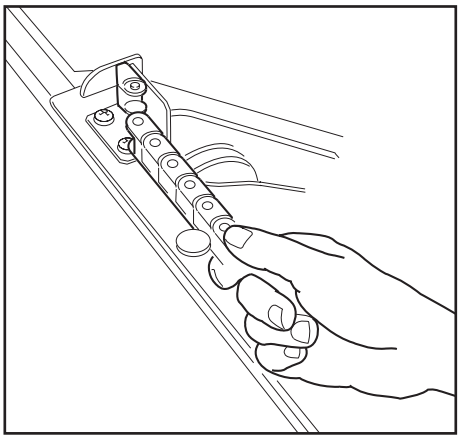

Rimuovere the top plastic cover **1** and the plate **2**.

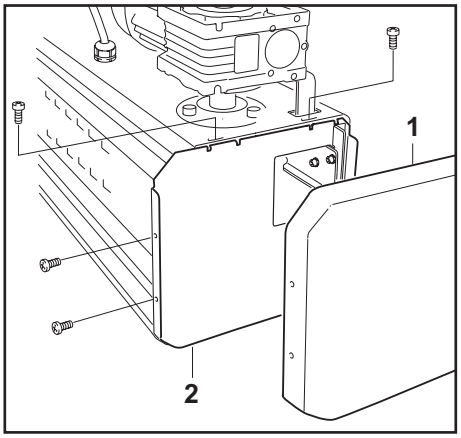

Loosen and remove the belt top pin; remove the belt.

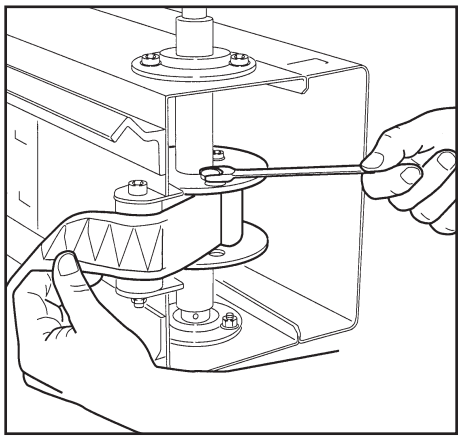

Extract the reel holder carriage.

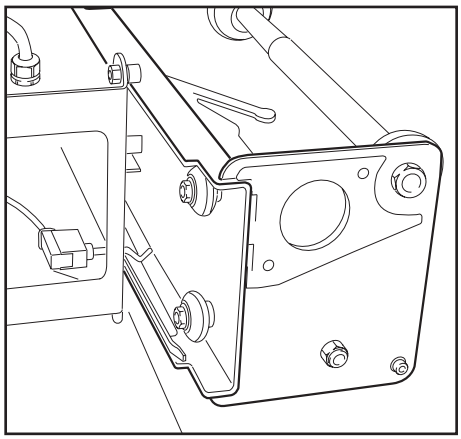

Remove the belt bottom pin inside the carriage and replace the belt as required.

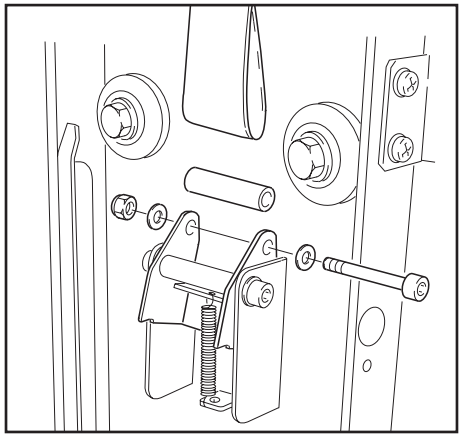

SIAT S.p.A.
Via Puecher, 22 - 22078 TURATE (CO) ITALY - Tel. 02964951 - Fax 029689727 - http://www.siat.com - Email: siat@siat.com

13-MAINTENANCE AND REPAIR

LIST OF THE MAINTENANCE AND/OR REPAIR OPERATIONS CARRIED OUT ON THE MACHINE

DatE	Description of the operation

14 -ADDITIONAL INSTRUCTIONS

14 .1 INSTRUCTIONS FOR SCRAPPING OF THE MACHINE

In order to dispose of the machine materials please comply with the law in force in your country.
Follow the RAEE Directive for the disposal of electric-electronic type components.
Please inform the Seller or the Manufacturer of the machine scarapping and return the identification data plate with CE marking.

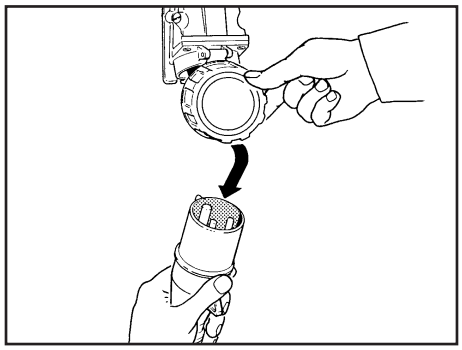

14.2 NSTRUCTIONS ON EMERGENCY SITUATIONS

In case of danger/fire:
disconnect the electric power.

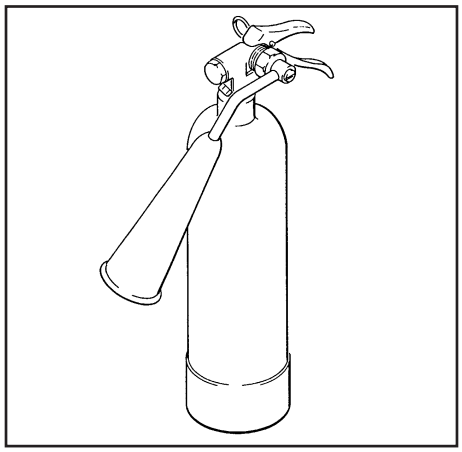

FIRE
In case of fire use an extinguisher containing CO2.

DO NOT use water.

SIAT S.p.A.
Via Puecher, 22 - 22078 TURATE (CO) ITALY - Tel. 02964951 - Fax 029689727 - http://www.siat.com - Email: siat@siat.com

15-ENCLOSURES

15.1 STATEMENT OF CONFORMITY

to the Directives on Machinery 98/37/CE, 2006/95 CE, 89/336 CEE, 108/04 CE, 2002/96/CE, 2003/108/CE.

15.2 SAFETY LABELS

The safety labels are important for the correct use of the machine.
In case any label is damaged or removed, it is responsibily of the user to replace it immediately.

15.3 EMISSIONS OF RADIATIONS, GAS, VAPOURS AND DUST

Nothing to report

15.4 ELECTRIC TESTS

Electric tests:
1 - Continuity of the ground circuit
2 - Insulation resistance
3 - High voltage insulation
Reference: EN 60204-1 Section 20.2, 20.3, 20.4

Viale Lombardia 20 - 20021 Bolate (MILANO) - ITALY
www.csi-spa.com Tel. +39.02.383301 - Fax +39.02.3503940

CERTIFICATO DI CONFORMITA' DEL TIPO

TYPE EXAMINATION CERTIFICATE

Registrazione n.° MAC 053/10
Registration number

l'Istituto di Certificazione CSI S.p.A.
The Certification Body CSI S.p.A.

dichiara che
declares that

SIAT S.p.A.
Via Puecher, 22 - 22078 TURATE (CO)

Ha progettato e costruito in modo conforme ai Requisiti Essenziali di Sicurezza applicabili dell'allegato I della Direttiva 2006/42/CE e della norma armonizzata EN 415-6:2006 + A1:2009 la seguente macchina
has designed and built in compliance to the Essential Safety Requirements of 2006/42/EC Directive annex I and to the harmonized standard EN 415-6:2006 + A1:2009 the following machine

AVVOLGIPALLET SEMI-AUTOMATICO A TAVOLA ROTANTE

SEMI AUTOMATIC TURNABLE PALLET WRAPPER

***Modello**/Model:*

"PAKLET" - F0, F0-HS, F1, F1-HS, SW1, SW1-HS, SW2, SW2-HS

Data emissione/*Issue date*
24/05/2010
Data scadenza/*Expiring date*
23/05/2015

GRUPPO IMQ

Il Responsabile del Centro
Managing Director
Dott. Ing. P. Cau

SIAT S.p.A.
Via Puecher, 22 - 22078 TURATE (CO) ITALY - Tel. 02964951 - Fax 029689727 - http://www.siat.com - Email: siat@siat.com

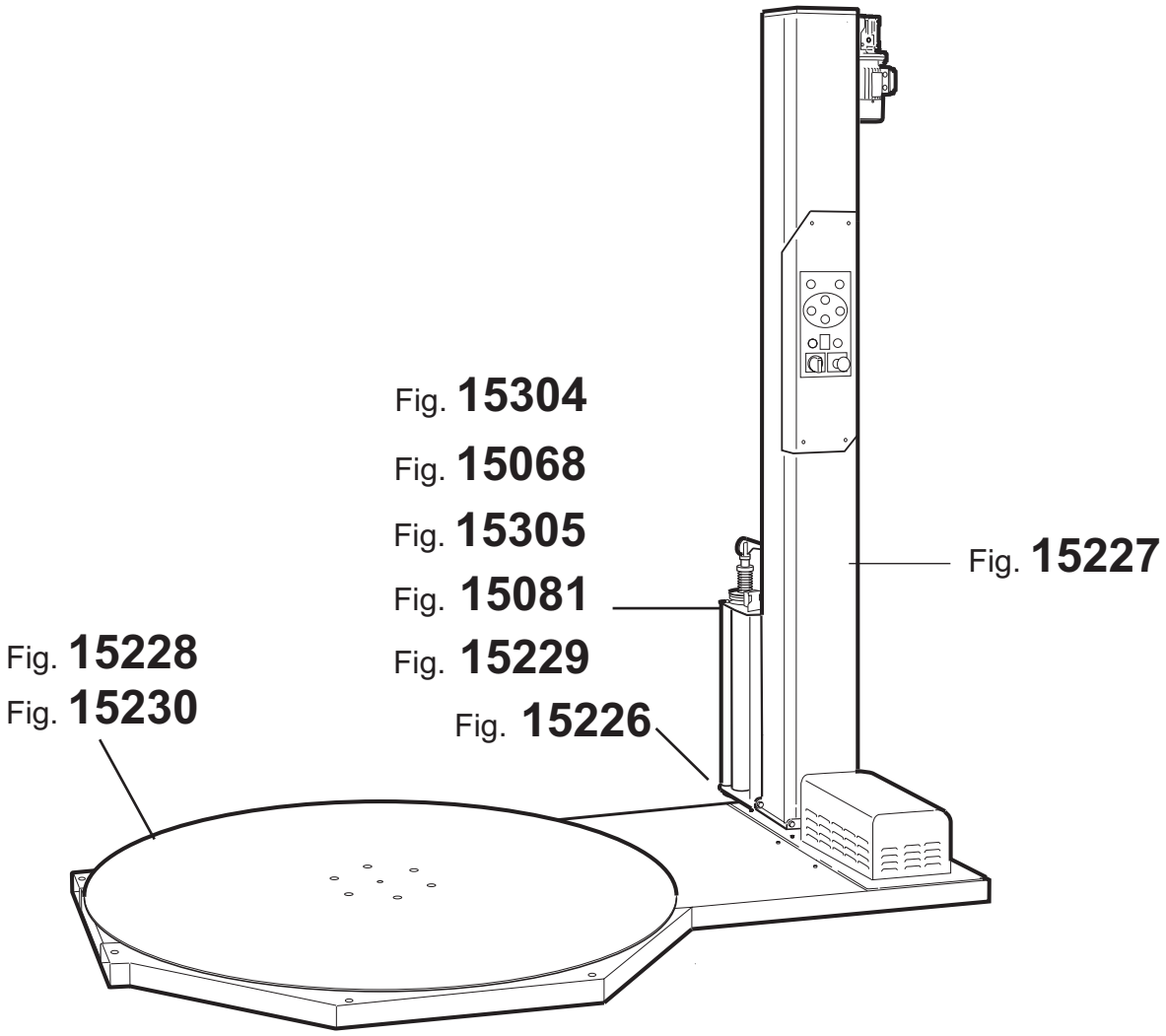
Fig. 15304
Fig. 15068
Fig. 15305
Fig. 15081
Fig. 15229
Fig. 15226
Fig. 15227
Fig. 15228
Fig. 15230

Fig. 15304 PORTABOBINA FAMF1SEMIAUTO F1 FASCIAPALLET FRENO MECCANICO

Pos.	Q.tà	Codice	Denominazione
1	1	SBA0006044	CARRELLO PORTABOB. COMP. SW1 M-SM-FM
2	4	S310195800A	ROTELLA CARRELLO WS100
3	4	S320926993A	RONDELLA /25-16,5 SP.2,5 ZINC. WS100
4	2	S332207492A	PERNO ROTELLA WS100 BRUN.
5	5	S340006293Z	RONDELLA PIANA X VITE M12 ZINC
6	4	S340223393Z	DADO SPEC.AUTOBLOCC. M12 P.1
7	2	S332207592A	PERNO ROTELLA ECCENTRICO WS100 BRUN.
8	1	S320926498A	CORPO FRENO WS100 INOX
9	1	S332208592A	PERNO ROTAZIONE FRENO WS100 BRUN.
10	5	S340012393Z	RONDELLA PIANA X VITE M8 ZINC.
11	1	S340129293Z	VITE TCEI M8X80 ZINCATA
12	2	S340028393Z	DADO AUTOBLOCCANTE M8 ZINCATO
13	1	S332208492A	PERNO ATTACCO CINGHIA WS100 BRUN.WS100
14	1	S340091092Z	VITE TCEI M8X70 BRUNITA
15	1	S370031898A	MOLLA FRENO WS3
16	1	S440857700A	CAMMA CARRELLO COMP. WS100
17	9	S340006193Z	RONDELLA PIANA X VITE M5 ZINC.
18	2	S340011293Z	VITE TCEI M5X16 ZINCATA
19	1	S340065593Z	RONDELLA TRIPLA X VITE M8 ZINC
20	2	S340058493Z	VITE TCEI M8X16 ZINCATA
21	1	SBC0008524	ALBERINO RULLO FOLLE
22	1	SBA0005213	RULLO DI CONTRASTO COMPLETO
23	2	SBC0008523	DISTANZIALE RULLO
24	1	SBC0009450	PIASTRA PORTABOBINA SUP. SW1-M-FM
25	2	S340017593Z	RONDELLA PIANA X VITE M6 ZINC.
26	2	S340000293Z	DADO M6 ZINCATO
27	1	S331910092A	BUSSOLA RULLO WS2
28	1	S4305051ZZZ	PERNO RULLO COMPLETO WS2
29	1	S340180493Z	DADO M12 AUTOBLOCCANTE BASSO
30	1	SBA0009873	RULLO COMPLETO
31	1	S4304890ZZZ	SUPPORTO CON CUSCINETTO
32	5	S340032993Z	VITE TE M5X16 ZINCATA
33	1	S4304892ZZZ	CONTRASTO FRIZIONE C/SPINA
34	1	S4204333ZZZ	DISCO FRENO INCOLLATO WS2
35	1	S450544993Z	PIATTELLO C/PUNTALINI WS
36	1	S370025193Z	MOLLA FILO /5X43X65 GR.CARREL. AF/WM
37	1	S350235792Z	POMOLO REG.FRIZ GRUP CARR WS
38	1	S350240892Z	BUSSOLA FILETTATA GR.CARRELLO WS
39	1	S3311811ZZZ	SPINA RIBASSATA GR.CARRELLO AF/WM
40	1	S340018892Z	ANELLO X ALBERO 30 BR.
41	1	SBA0009201	LEVA SGANCIO COMPLETA
42	1	S340005893Z	VITE TE M8X25 ZINCATA
43	2	SBC0014327T	BUSSOLA CUSCINETTO LEVA
44	1	S321669600A	SQUADRETTA ATTACCO CATENA WS
45	2	S340514093A	VITE TRILOBATE M6X12 TESTA TCBCR (TEXTR
46	1	SBC0008060	VITE SPECIALE M20x1
47	1	S321032098A	RONDELLA /80 /20.5 SP.2 INOX
48	1	SBA0005200	FLANGIA PORTABOBINA COMPLETA

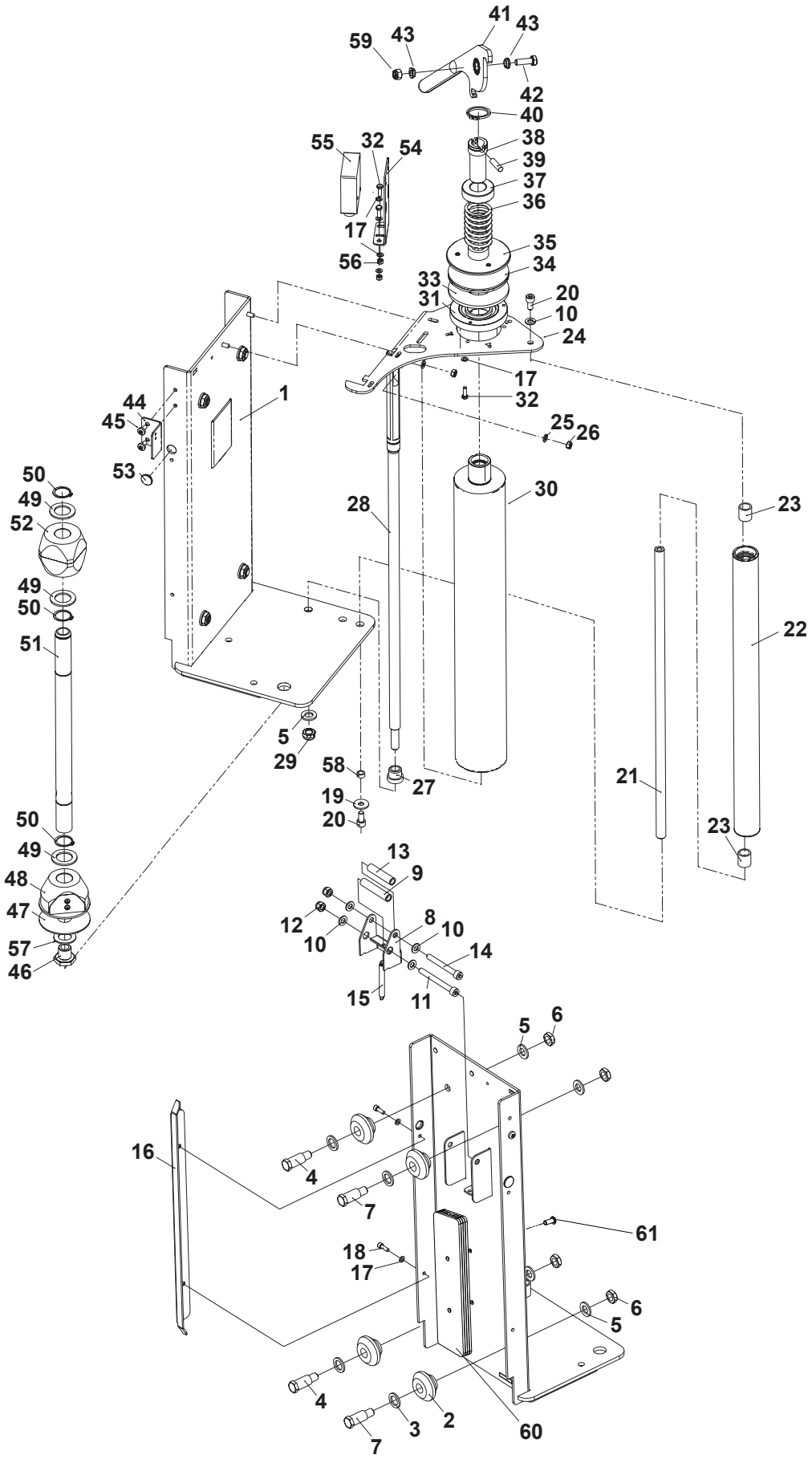
41
43
59
43
42
40
38
39
37
36
55
32
54
17
56
35
34
33
31
20
10
24
17
32
1
44
45
25
26
53
50
49
52
28
30
23
49
50
22
51
5
29
58
27
21
19
20
23
50
49
13
9
48
47
12
8
10
10
14
57
46
15
11
5
6
16
4
7
61
18
17
6
5
4
3
2
60
7

Fig. 15304 PORTABOBINA FAMF1SEMIAUTO F1 FASCIAPALLET FRENO MECCANICO

Pos.	Q.tà	Codice	Denominazione
49	3	S321205693A	RONDELLA DIAM.40/25,5X2,5 ZINC. RA
50	3	S340010492Z	ANELLO ARRESTO X ALBERO /25 BR
51	1	SBC0008057	ALBERO PORTABOBINA
52	1	SBA0005198	MANICOTTO PORTABOBINA COMPLETO
53	2	S310071605Z	TAPPO /19
54	1	SBC0000246	SQUADRETTA ATTACCO FOTOCELLULA WS
55	1	S380808900A	FTC TASTEGGIO CONN. M12 PNP N.C. TIPO S6R-5-C200-P
56	2	S340023493Z	DADO M5 ZINCATO BASSA RESIST.
57	1	S320699093A	RONDELLA RULLO A SBALZO APS
58	1	SCA0000857	BRONZINA Ø12/8 SP.5.9mm
59	1	S340028393Z	DADO AUTOBLOCCANTE M8 ZINCATO
60	1	SBA0010788V	ZAVORRA SALDATA
61	2	S340507793A	VITE TBEI M8X20 ZINCATA

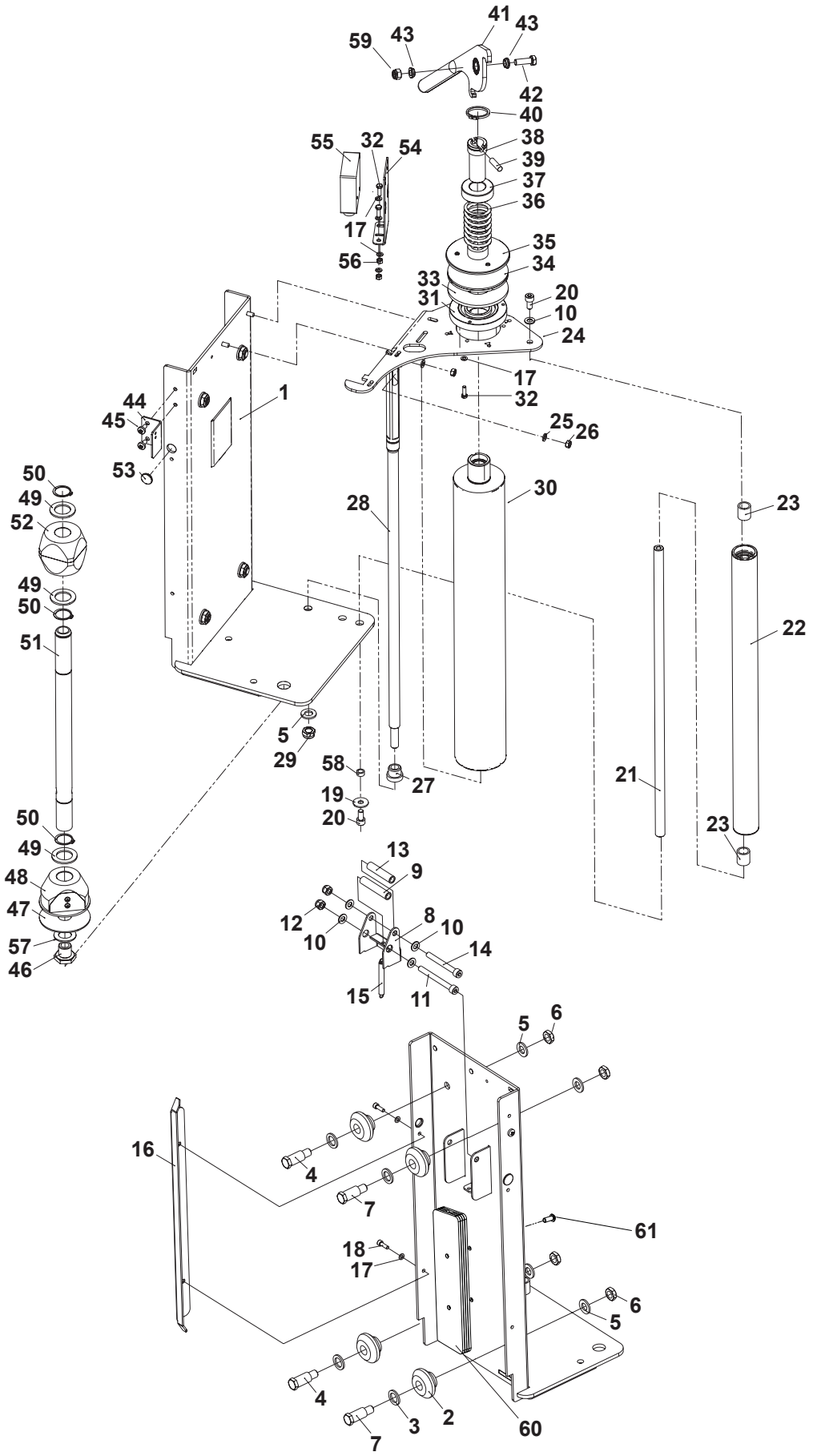
41
43
59
43
42
40
38
39
37
36
55
32
54
17
56
35
34
33
31
20
10
24
17
32
1
44
45
25
26
53
50
49
52
28
30
23
49
50
22
51
5
29
58
27
21
19
20
23
50
49
13
9
48
47
12
8
10
10
14
57
46
15
11
5
6
16
4
7
61
18
17
6
5
4
2
3
60
7

Fig. 15068 PORTABOBINA FAMF1SEMIAUTO F1 FASCIAPALLET
FRENO ELETTROMAGNETICO

Pos.	Q.tà	Codice	Denominazione
1	1	SBA0006044	CARRELLO PORTABOB. COMP. SW1 M-SM-FM
2	4	S310195800A	ROTELLA CARRELLO WS100
3	4	S320926993A	RONDELLA /25-16,5 SP.2,5 ZINC. WS100
4	2	S332207492A	PERNO ROTELLA WS100 BRUN.
5	4	S340006293Z	RONDELLA PIANA X VITE M12 ZINC
6	4	S340223393Z	DADO SPEC.AUTOBLOCC. M12 P.1
7	2	S332207592A	PERNO ROTELLA ECCENTRICO WS100 BRUN.
8	1	S320926498A	CORPO FRENO WS100 INOX
9	1	S332208592A	PERNO ROTAZIONE FRENO WS100 BRUN.
10	7	S340012393Z	RONDELLA PIANA X VITE M8 ZINC.
11	1	S340129293Z	VITE TCEI M8X80 ZINCATA
12	3	S340028393Z	DADO AUTOBLOCCANTE M8 ZINCATO
13	1	S332208492A	PERNO ATTACCO CINGHIA WS100 BRUN.WS100
14	1	S340091092Z	VITE TCEI M8X70 BRUNITA
15	1	S370031898A	MOLLA FRENO WS3
16	1	S440857700A	CAMMA CARRELLO COMP. WS100
17	14	S340006193Z	RONDELLA PIANA X VITE M5 ZINC.
18	2	S340011293Z	VITE TCEI M5X16 ZINCATA
19	1	S340065593Z	RONDELLA TRIPLA X VITE M8 ZINC
20	2	S340058493Z	VITE TCEI M8X16 ZINCATA
21	1	SBC0008524	ALBERINO RULLO FOLLE
22	1	SBA0005213	RULLO DI CONTRASTO COMPLETO
23	2	SBC0008523	DISTANZIALE RULLO
24	1	SBC0009450	PIASTRA PORTABOBINA SUP. SW1-M-FM
25	2	S340017593Z	RONDELLA PIANA X VITE M6 ZINC.
26	2	S340000293Z	DADO M6 ZINCATO
27	1	S321669600A	SQUADRETTA ATTACCO CATENA WS
28	2	S340514093A	VITE TRILOBATE M6X12 TESTA TCBCR (TEXTR
29	1	SBC0008060	VITE SPECIALE M20x1
30	1	S321032098A	RONDELLA /80 /20.5 SP.2 INOX
31	1	SBA0005200	FLANGIA PORTABOBINA COMPLETA
32	3	S321205693A	RONDELLA DIAM.40/25,5X2,5 ZINC. RA
33	3	S340010492Z	ANELLO ARRESTO X ALBERO /25 BR
34	1	SBC0008057	ALBERO PORTABOBINA
35	1	SBA0005198	MANICOTTO PORTABOBINA COMPLETO
36	2	S310071605Z	TAPPO /19
37	1	SBC0000246	SQUADRETTA ATTACCO FOTOCELLULA WS
38	1	S380808900A	FTC TASTEGGIO CONN. M12 PNP N.C. TIPO S6R-5-C200-P
39	2	S340032993Z	VITE TE M5X16 ZINCATA
40	6	S340023493Z	DADO M5 ZINCATO BASSA RESIST.
41	1	SBC0009454	BUSSOLA RULLO SW1/SW2 SM-FM PAKLET
42	1	S340017793A	VITE TCEI M8X40 ZINCATA TUTTO FILETTO
43	1	SBA0009883	RULLO COMPLETO
44	1	S332305981A	CANOT FRENO WS LAV PARTIC
45	1	S332306393A	DISTANZIALE ARRESTO RULLO WS ZINC.
46	1	SBA0006068	FLANGIA C//CUSCINETTO SW PAKLET
47	1	S340019192Z	ANELLO ARRESTO X FORO 47
48	2	S321006883A	CONTRODISCO FRENO BURATTATO

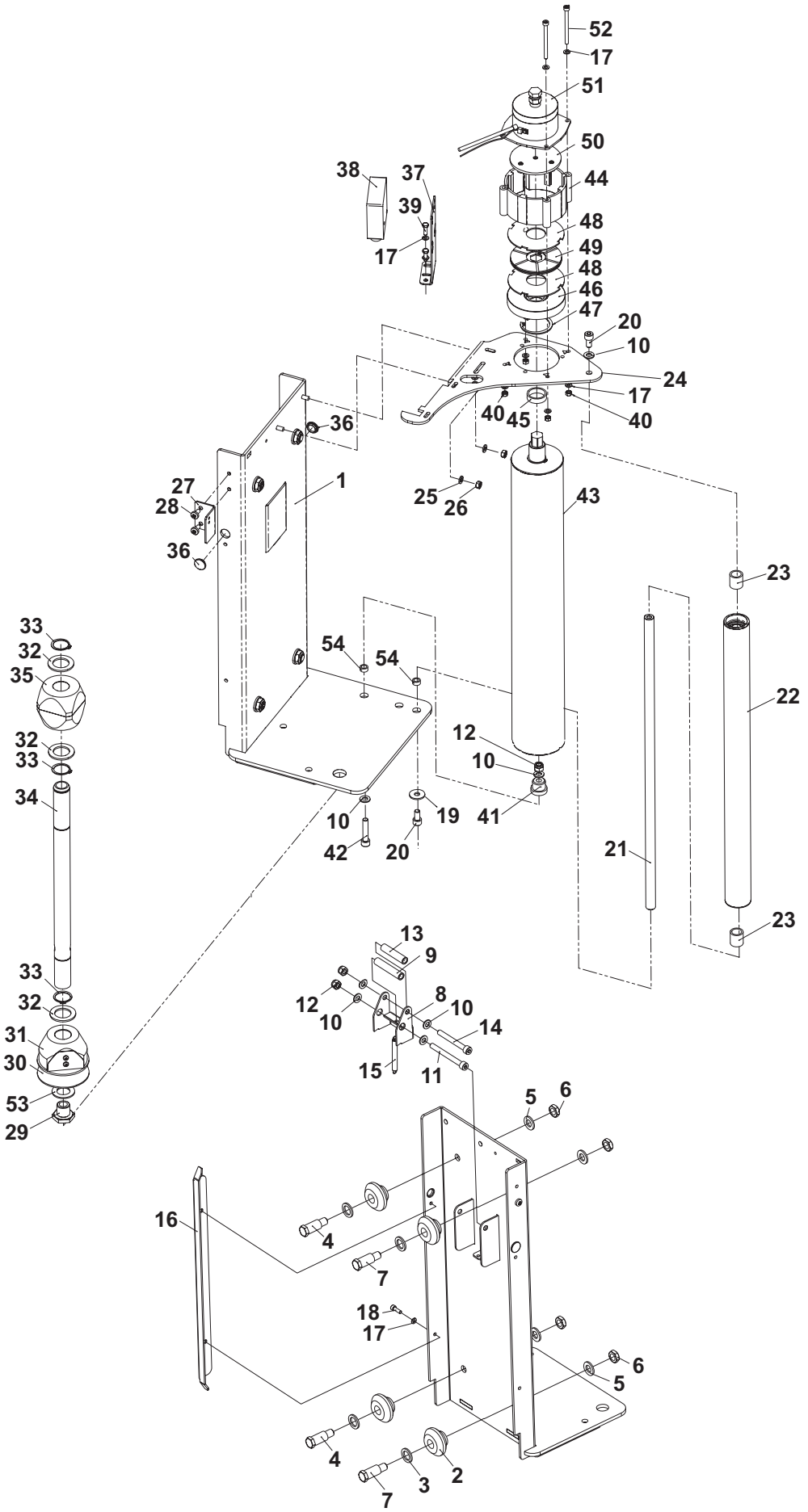
52
17
51
50
44
48
49
48
46
47
20
10
24
17
40
45
40
38
37
39
17
36
1
27
28
36
25
26
43
23
33
32
35
32
33
34
54
54
22
12
10
10
19
41
42
20
21
23
13
9
12
10
8
10
14
15
11
33
32
31
30
53
29
5
6
16
4
7
18
17
6
5
4
3
2
7

Fig. 15068 PORTABOBINA FAMF1SEMIAUTO F1 FASCIAPALLET
FRENO ELETTROMAGNETICO

Pos.	Q.tà	Codice	Denominazione
49	1	S4204332ZZZ	DISCO-FRENO INCOLLATO WS
50	1	S450544893Z	PIATTELLO C/PUNTALINI WS
51	1	SBA0001946	ELETTROMAGNETE PREMONTATO PAKLET
52	4	S340224593Z	VITE TCEI M5X65 ZINCATA
53	1	S320699093A	RONDELLA RULLO A SBALZO APS
54	2	SCA0000857	BRONZINA Ø12/8 SP.5.9mm

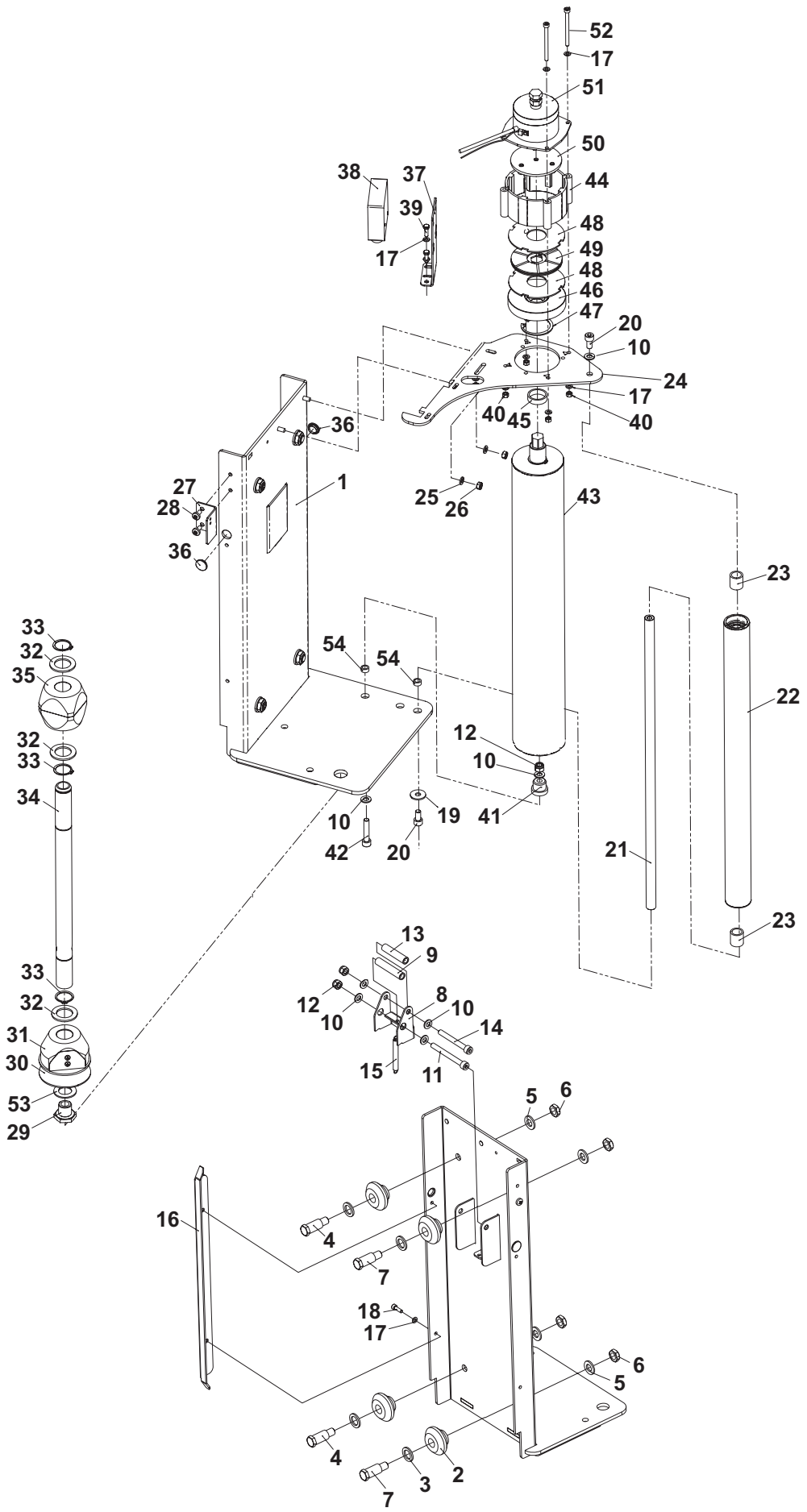
52
17
51
50
44
48
49
48
46
47
20
10
24
17
40
45
40
38
37
39
17
36
1
27
28
36
25
26
43
23
22
21
23
54
54
12
10
41
19
10
42
20
33
32
35
32
33
34
33
32
31
30
53
29
13
9
12
10
8
10
14
15
11
5
6
16
4
7
18
17
6
5
4
3
2
7

Fig. 15305 PORTABOBINA PRESTIRO MECCANICO FAMF1SEMIAUTO F1 FASCIAPALLET

Pos.	Q.tà	Codice	Denominazione
1	1	SBA0006044	CARRELLO PORTABOB. COMP. SW1 M-SM-FM
2	4	S310195800A	ROTELLA CARRELLO WS100
3	4	S320926993A	RONDELLA /25-16,5 SP.2,5 ZINC. WS100
4	2	S332207492A	PERNO ROTELLA WS100 BRUN.
5	5	S340006293Z	RONDELLA PIANA X VITE M12 ZINC
6	4	S340223393Z	DADO SPEC.AUTOBLOCC. M12 P.1
7	2	S332207592A	PERNO ROTELLA ECCENTRICO WS100 BRUN.
8	1	S320926498A	CORPO FRENO WS100 INOX
9	1	S332208592A	PERNO ROTAZIONE FRENO WS100 BRUN.
10	8	S340012393Z	RONDELLA PIANA X VITE M8 ZINC.
11	1	S340129293Z	VITE TCEI M8X80 ZINCATA
12	3	S340028393Z	DADO AUTOBLOCCANTE M8 ZINCATO
13	1	S332208492A	PERNO ATTACCO CINGHIA WS100 BRUN.WS100
14	1	S340091093Z	VITE TCEI M8X70 ZINCATA
15	1	S370031898A	MOLLA FRENO WS3
16	1	S440857700A	CAMMA CARRELLO COMP. WS100
17	12	S340006193Z	RONDELLA PIANA X VITE M5 ZINC.
18	2	S340011293Z	VITE TCEI M5X16 ZINCATA
19	2	S340058493Z	VITE TCEI M8X16 ZINCATA
20	1	S321680100A	PIASTRA PORTABOBINA
21	2	S340017593Z	RONDELLA PIANA X VITE M6 ZINC.
22	2	S340000293Z	DADO M6 ZINCATO
23	1	S332950400A	BUSSOLA RULLO
24	1	S340180493Z	DADO M12 AUTOBLOCCANTE BASSO
25	2	S4304890ZZZ	SUPPORTO CON CUSCINETTO
26	1	S332950500A	PERNO RULLO
27	1	SBA0009892	RULLO PILOTA COMPLETO
28	1	SBC0009454	BUSSOLA RULLO SW1/SW2 SM-FM PAKLET
29	1	S340044293Z	VITE TE M8X45 ZINCATA
30	1	SBA0009893	RULLO INSEGUITORE COMPLETO
31	1	S332950700A	INGRANAGGIO Z=35 m=2
31	1	S332981700A	INGRANAGGIO Z=30 m=2
31	1	S332981400A	INGRANAGGIO Z=39 m=2
32	1	S3401051ZZZ	LINGUETTA 8X7X25
33	1	S321680600A	RONDELLA
34	1	S332950800A	INGRANAGGIO Z=55 m=2
34	1	S332981500A	INGRANAGGIO Z=51 m=2
34	1	S332981600A	INGRANAGGIO Z=60 m=2
35	1	S321680700A	RONDELLA 2
36	1	SBC0000478	MOLLA DIAM.E.38.4 H.50-FILO 2,7-7 SPIRE
37	3	S380827300A	SPINA CILINDRICA UNI8734-5X18
38	1	S332981100A	FLANGIA PORTA MOLLA E CUSC.
39	2	S3400727ZZZ	SPINA ELASTICA 4 X 16
40	1	S3400185ZZZ	REGGISPINTA 51106
41	1	SBC0000477	MOLLA DIAM.E.42,5-H.30-FILO 4,6-2 SPIRE
42	1	S332981200A	FLANGIA PORTA MOLLA
43	1	S3311811ZZZ	SPINA RIBASSATA GR.CARRELLO AF/WM
44	1	S340018892Z	ANELLO X ALBERO 30 BR.

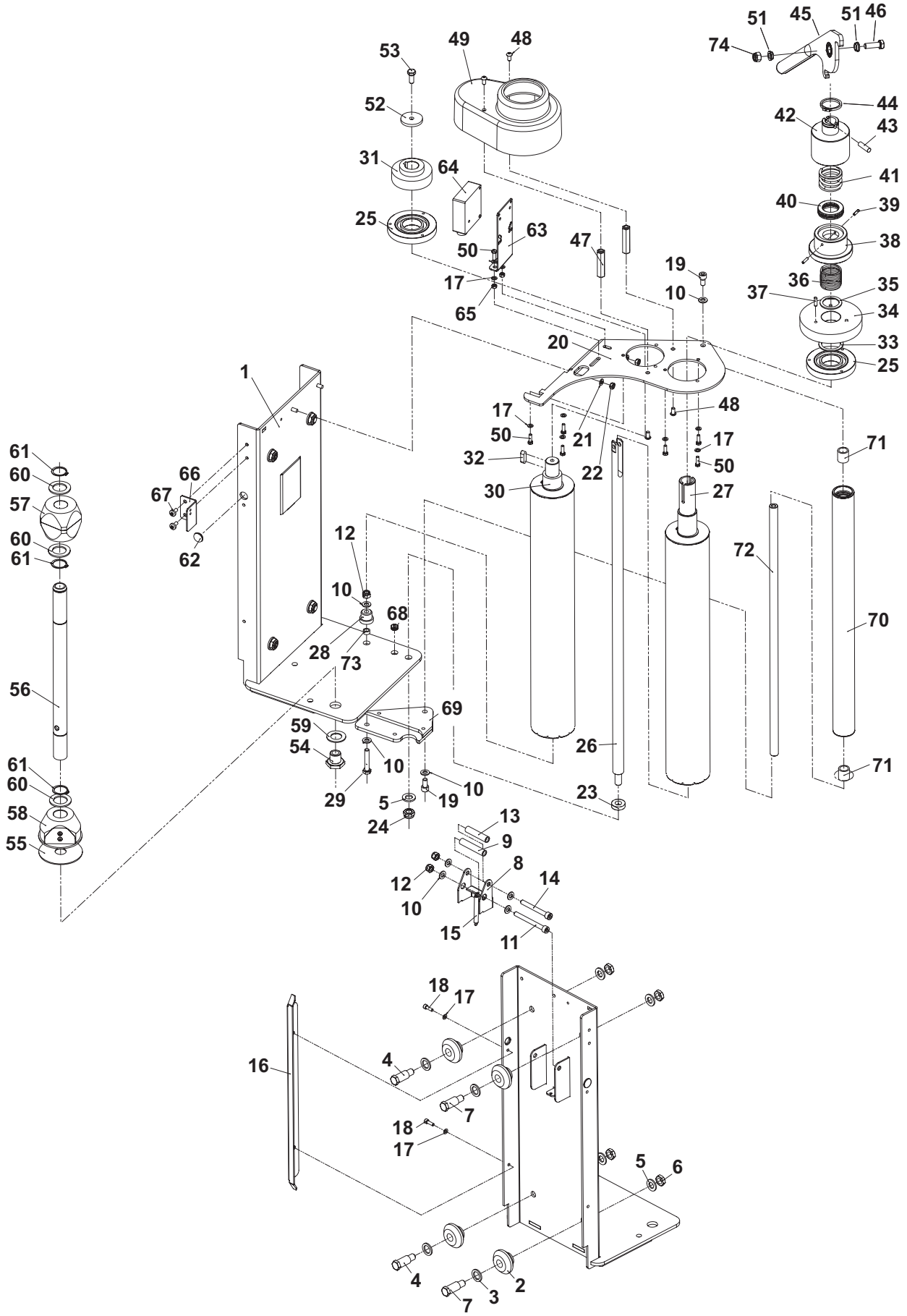
51
45
51
46
74
49
48
53
44
52
42
43
31
64
41
40
39
25
63
38
50
47
19
36
35
17
10
37
34
65
33
20
25
1
48
17
21
50
17
71
32
22
50
61
66
30
27
60
67
57
12
72
60
62
61
10
68
70
28
73
56
69
59
26
54
10
71
61
10
60
29
5
19
23
58
24
13
55
9
8
12
14
10
15
11
18
17
16
4
7
18
17
5
6
4
2
3
7

Fig. 15305 PORTABOBINA PRESTIRO MECCANICO **FAMF1SEMIAUTO** **F1 FASCIAPALLET**

Pos.	Q.tà	Codice	Denominazione
45	1	SBA0009201	LEVA SGANCIO COMPLETA
46	1	S340005893Z	VITE TE M8X25 ZINCATA
47	2	S332981300A	COLONNINA CARTER
48	4	S340174993Z	VITE TBEI M6X12 ZINC.
49	1	S310227300A	CARTER PER PRESTIRO MECC.
50	8	S340032993Z	VITE TE M5X16 ZINCATA
51	2	SBC0014327T	BUSSOLA CUSCINETTO LEVA
52	1	S331802593A	RONDELLA DIAM.8/40 SP WS3/3000
53	1	S340028093Z	VITE TE M8X20 ZINCATA
54	1	SBC0008060	VITE SPECIALE M20x1
55	1	S321032098A	RONDELLA /80 /20.5 SP.2 INOX
56	1	SBC0008057	ALBERO PORTABOBINA
57	1	SBA0005198	MANICOTTO PORTABOBINA COMPLETO
58	1	SBA0005200	FLANGIA PORTABOBINA COMPLETA
59	1	S320699093A	RONDELLA RULLO A SBALZO APS
60	3	S321205693A	RONDELLA DIAM.40/25,5X2,5 ZINC. RA
61	3	S340010492Z	ANELLO ARRESTO X ALBERO /25 BR
62	2	S310071605Z	TAPPO /19
63	1	SBC0000246	SQUADRETTA ATTACCO FOTOCELLULA WS
64	1	S380808900A	FTC TASTEGGIO CONN. M12 PNP N.C. TIPO S6R-5-C200-P
65	2	S340023493Z	DADO M5 ZINCATO BASSA RESIST.
66	1	S321669600A	SQUADRETTA ATTACCO CATENA WS
67	2	S340514093A	VITE TRILOBATE M6X12 TESTA TCBCR (TEXTR
68	1	SBC0008011	BUSSOLA CONICA M6
69	1	SBA0006058	PIASTRA SUPPLEMENTARE COMP. P.B. SM
70	1	SBA0005213	RULLO DI CONTRASTO COMPLETO
71	2	SBC0008523	DISTANZIALE RULLO
72	1	SBC0008524	ALBERINO RULLO FOLLE
73	1	SCA0000857	BRONZINA Ø12/8 SP.5.9mm
74	1	S340028393Z	DADO AUTOBLOCCANTE M8 ZINCATO

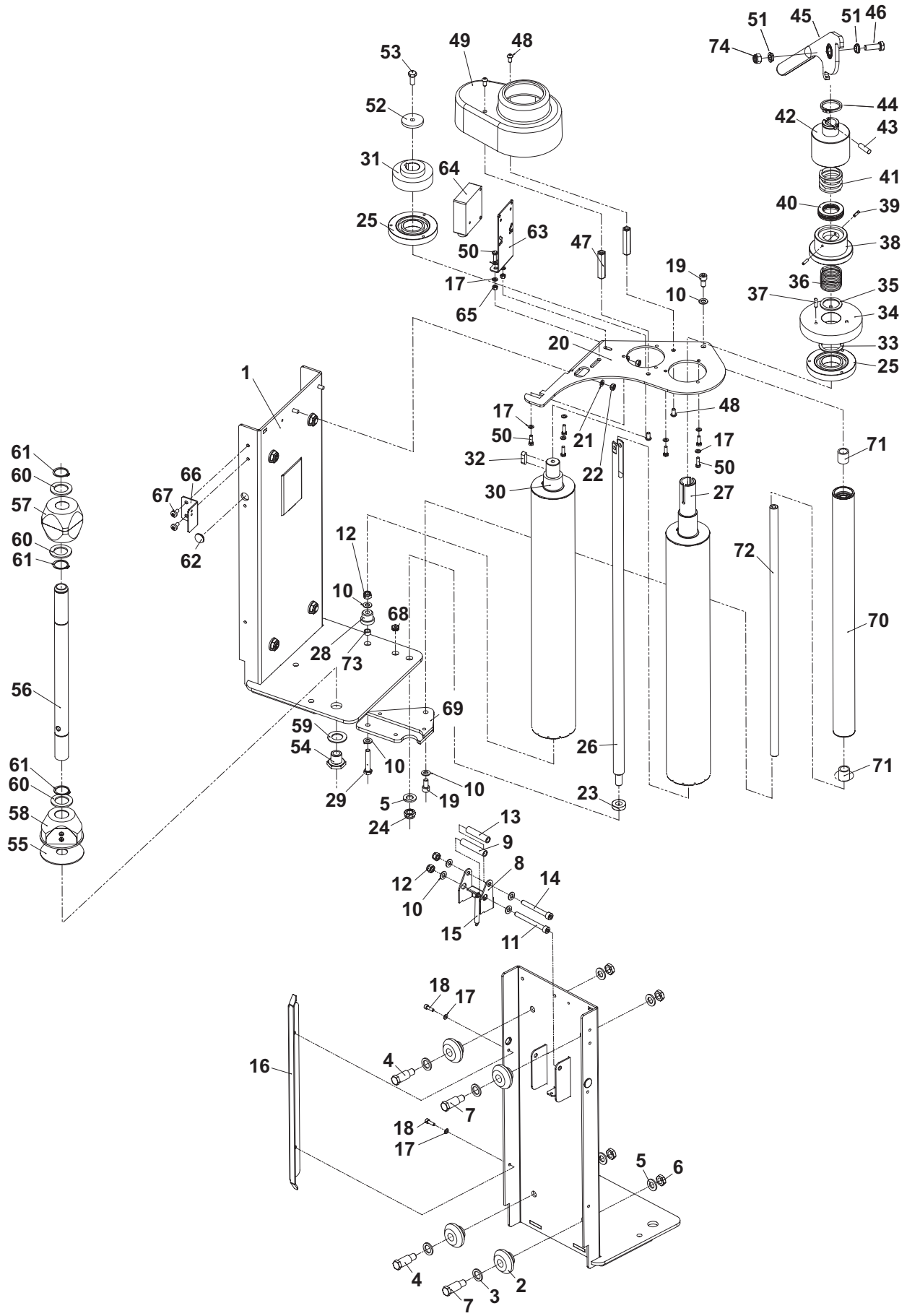
51
45
51
46
74
49
48
53
44
52
42
43
31
64
41
40
39
25
63
38
50
47
19
36
17
10
37
35
65
34
20
33
25
1
48
17
21
50
17
71
32
22
50
61
66
30
27
60
67
57
12
72
60
62
61
10
68
70
28
73
56
69
59
26
54
10
61
71
60
29
5
19
10
23
58
24
13
55
9
8
12
14
10
15
11
18
17
16
4
7
18
17
5
6
4
2
3
7

Fig. 15081 PORTABOBINA EM FAMF1SEMIAUTO F1 FASCIAPALLET

Pos.	Q.tà	Codice	Denominazione
1	1	SBA0003458V	CARRELLO PORTABOBINA
2	4	S310195800A	ROTELLA CARRELLO WS100
3	4	S320926993A	RONDELLA /25-16,5 SP.2,5 ZINC. WS100
4	2	S332207492A	PERNO ROTELLA WS100 BRUN.
5	4	S340006292Z	RONDELLA PIANA X VITE M12 BRU.
6	4	S340223393Z	DADO SPEC.AUTOBLOCC. M12 P.1
7	2	S332207592A	PERNO ROTELLA ECCENTRICO WS100 BRUN.
8	1	S320926498A	CORPO FRENO WS100 INOX
9	1	S332208592A	PERNO ROTAZIONE FRENO WS100 BRUN.
10	4	SCA0000044	ROSETTA ELASTICA 8.4x14.4 UNI 1751 A
11	1	S340129293Z	VITE TCEI M8X80 ZINCATA
12	2	S340028393Z	DADO AUTOBLOCCANTE M8 ZINCATO
13	1	S332208492A	PERNO ATTACCO CINGHIA WS100 BRUN.WS100
14	1	S340091093Z	VITE TCEI M8X70 ZINC.
15	1	S370031898A	MOLLA FRENO WS3
16	1	S440857740A	CAMMA CARRELLO COMP.
17	2	S340006192Z	RONDELLA PER VITE M5 BRUNITA
18	2	S340011292Z	VITE TCEI M5X16 BRUNITA
19	2	S340017592Z	RONDELLA PIANA X VITE M6 BRUN.
20	2	S340028492Z	DADO M6 BASSO BRUN.
21	1	S321669600A	SQUADRETTA ATTACCO CATENA WS
22	2	S340514093A	VITE TRILOBATE M6X12 TESTA TCBCR (TEXTR
23	1	S321256098A	DISCO INOX DIAM.95/20.5 SP2 WS
24	1	S310094100B	DISCO FRIZ IN FERODO GR.CARR AF/WM
25	1	SBA0003457	FLANGIA INF. C/BRONZINA
26	1	SBC0005108T	ALBERO PORTABOBINA
27	3	S340015492A	GRANO M5X8 BR.
28	1	S331496593A	DADO SPECIALE M20X1 APS
29	1	S340018892Z	ANELLO X ALBERO 30 BR.
30	1	SBA0003455	FLANGIA P/BOBINA SUP.PREMONT.
30.1	1	S430702ZZZ	FLANGIA P. BOB. SUP. CON BEARING WS33
30.2	1	S340023292Z	ANELLO ELASTICO FORO DA 55
30.3	1	S350240493Z	DISTANZIALE /45X7 GR. CARRELLO AF/WM-1
30.4	1	S370025193Z	MOLLA FILO /5X43X65 GR. CARREL. AF/WM
30.5	1	SBC0005105	CANNOTTO ESTERNO
30.6	1	S340018892Z	ANELLO PER ALBERO 30 BR.
30.7	1	SBC0005106	CANNOTTO ESTERNO
30.8	1	SBC0005107	PASTIGLIA
30.9	1	SCA0000437	MANOPOLA ELESA DIN 464 M5X16
31	1	SBC0005104V	MENSOLA SUPPORTO FOTOCELLULA
32	2	S340012393Z	RONDELLA PIANA X VITE M8 ZINC.
33	2	S340058493Z	VITE TCEI M8X16
34	2	S310071605Z	TAPPO /19
35	1	S380808900A	FTC TASTEGGIO CONN. M12 PNP N.C. TIPO S6R-5-C200-P
36	1	SBC0000246	SQUADRETTA ATTACCO FOTOCELLULA WS
37	4	S340006193Z	RONDELLA PIANA X VITE M5 ZINC.
38	2	S340023493Z	DADO M5 ZINCATO BASSA RESIST.
39	2	S340031893Z	VITE TCEI M5X12 ZINCATA
40	1	SBA0005213	RULLO DI CONTRASTO COMPLETO
41	2	SBC0008523T	DISTANZIALE RULLO
42	1	SBC0008524T	ALBERINO RULLO FOLLE
43	1	SBA0010788V	ZAVORRA SALD.
44	2	S340507793A	VITE TBEI M8X20 ZINCATA

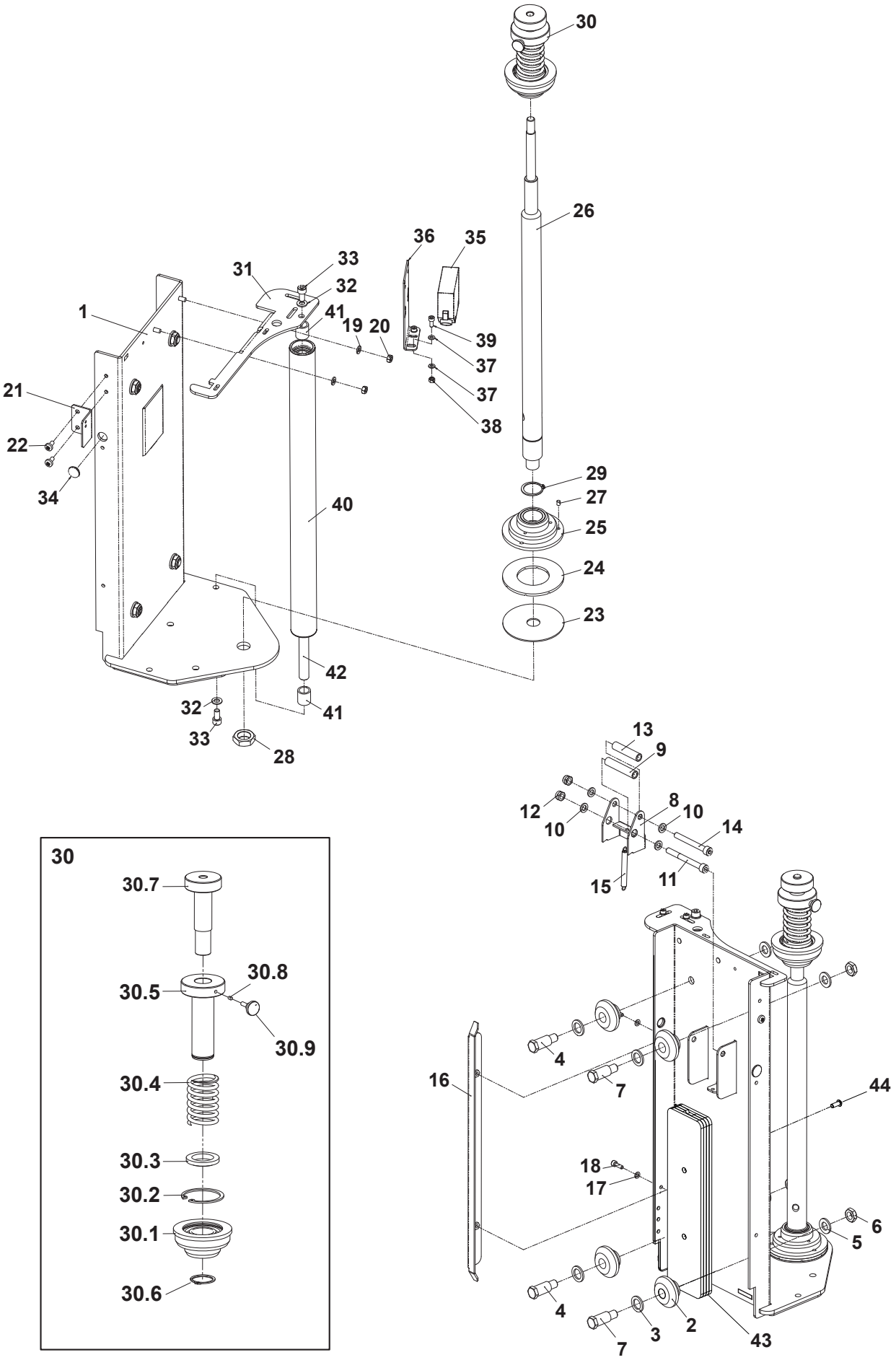
30
26
36
35
33
31
32
41
1
19
20
39
37
37
38
21
22
34
29
27
25
24
23
40
42
32
41
33
28
13
9
12
8
10
10
14
15
11
30
30.7
30.8
30.5
30.9
30.4
30.3
30.2
30.1
30.6
4
7
16
44
18
17
6
5
4
3
2
43
7

Fig. 15229 PORTABOBINA LP FAMF1SEMIAUTO F1 FASCIAPALLET PRESTIRO MOTORIZZATO

Pos.	Q.tà	Codice	Denominazione
2	1	SBA0007387	CARRELLO PORTABOB. SALD. LP
3	4	S310195800A	ROTELLA CARRELLO WS100
4	4	S320926993A	RONDELLA /25-16,5 SP.2,5 ZINC. WS100
5	2	S332207492A	PERNO ROTELLA WS100 BRUN.
6	4	S340006293Z	RONDELLA PIANA X VITE M12 ZINC
7	6	S340223393Z	DADO SPEC.AUTOBLOCC. M12 P.1
8	2	S332207592A	PERNO ROTELLA ECCENTRICO WS100 BRUN.
9	1	S320926498A	CORPO FRENO WS100 INOX
10	1	S332208592A	PERNO ROTAZIONE FRENO WS100 BRUN.
11	13	S340012393Z	RONDELLA PIANA X VITE M8 ZINC.
12	1	S340129293Z	VITE TCEI M8X80 ZINC.
13	2	S340028393Z	DADO AUTOBLOCCANTE M8 ZINCATO
14	1	S332208492A	PERNO ATTACCO CINGHIA WS100 BRUN.WS100
15	1	S340091093Z	VITE TCEI M8X70 ZINC.
16	1	S370031898A	MOLLA FRENO WS3
17	1	S440857700A	CAMMA CARRELLO COMP. WS100
18	24	S340006193Z	RONDELLA PIANA X VITE M5 ZINC.
19	20	S340031893Z	VITE TCEI M5X12 ZINCATA
20	6	S340058493Z	VITE TCEI M8X16
21	2	S332207292A	ALBERO RULLO RINVIO WS100
22	2	SBA0006340	RULLO DI CONTRASTO Ø40 COMPL.
23	1	SBC0009914	SQUADRETTA CATENA P.CAVI
24	2	S340514093A	VITE TRILOBATE M6X12 TESTA TCBCR (TEXTR
25	1	SBC0008060	VITE SPECIALE M20x1
26	1	S321032098A	RONDELLA /80 /20.5 SP.2 INOX
27	1	SBA0005200	FLANGIA PORTABOBINA COMPLETA
28	3	S321205693A	RONDELLA DIAM.40/25,5X2,5 ZINC. RA
29	3	S340010492Z	ANELLO ARRESTO X ALBERO /25 BR
30	1	SBC0008057	ALBERO PORTABOBINA
31	1	SBA0005198	MANICOTTO PORTABOBINA COMPLETO
32	2	S310071605Z	TAPPO /19
33	1	S320699093A	RONDELLA RULLO A SBALZO APS
34	1	SBA0007389	PIASTRA SUPERIORE C-BRONZ.
35	1	SBA0006349	RULLO PILOTA COMPL.
36	1	SBC0009866T	ALBERO RULLO C-TASTATORE
37	2	SBA0006342	RULLO DI CONTRASTO BALLERINO
38	1	SBC0009918	LEVA DENTATA POTENZIOMETRO
39	1	SBB0001612	POTENZIOMETRO X BALLERINO PRESTIRO LP
40	1	S331710800B	(C) INGRANAGGIO TASTATORE APS
41	1	S340016592Z	GRANO EIPC M4X5 BR.
42	1	SBA0006347	LEVA TASTATORE COMPL.
42.1	1	S331516892A	PERNO RULLINO TASTATORE APS
42.2	2	S310154900A	RULLINO TASTATORE APS
42.3	2	S340003393Z	RONDELLA TRIPLA X VITE M6 ZINC.
42.4	2	S340018093Z	VITE TCEI M6X60 ZINC. F144
43	3	SCA0000889	BRONZINA SINTER. COLL. 12.1-16-20x10x2
44	1	SBC0009867	BUSSOLA CALETTAM. LEVA
45	5	S340220292Z	RANELLA DI SAFETY "S" (SCHNORR) /4 F144
46	3	S340025693Z	VITE TCEI M4X10 ZINCATA
47	1	S3101260ZZZ	RONDELLA /25X12X2 IN POLITENE GTL/M/R
48	1	S340220392Z	RANELLA DI SAFETY "S" (SCHNORR) /5 F144
49	1	SBC0010284T	VITE M5 SPECIALE TENDIMOLLA
50	1	S340066692Z	GRANO EIPC M5X16
51	1	SBA0006345	INGRANAGGIO COND. C-MOZZO
52	1	SBA0007397	SPORTELLO PREMONT.

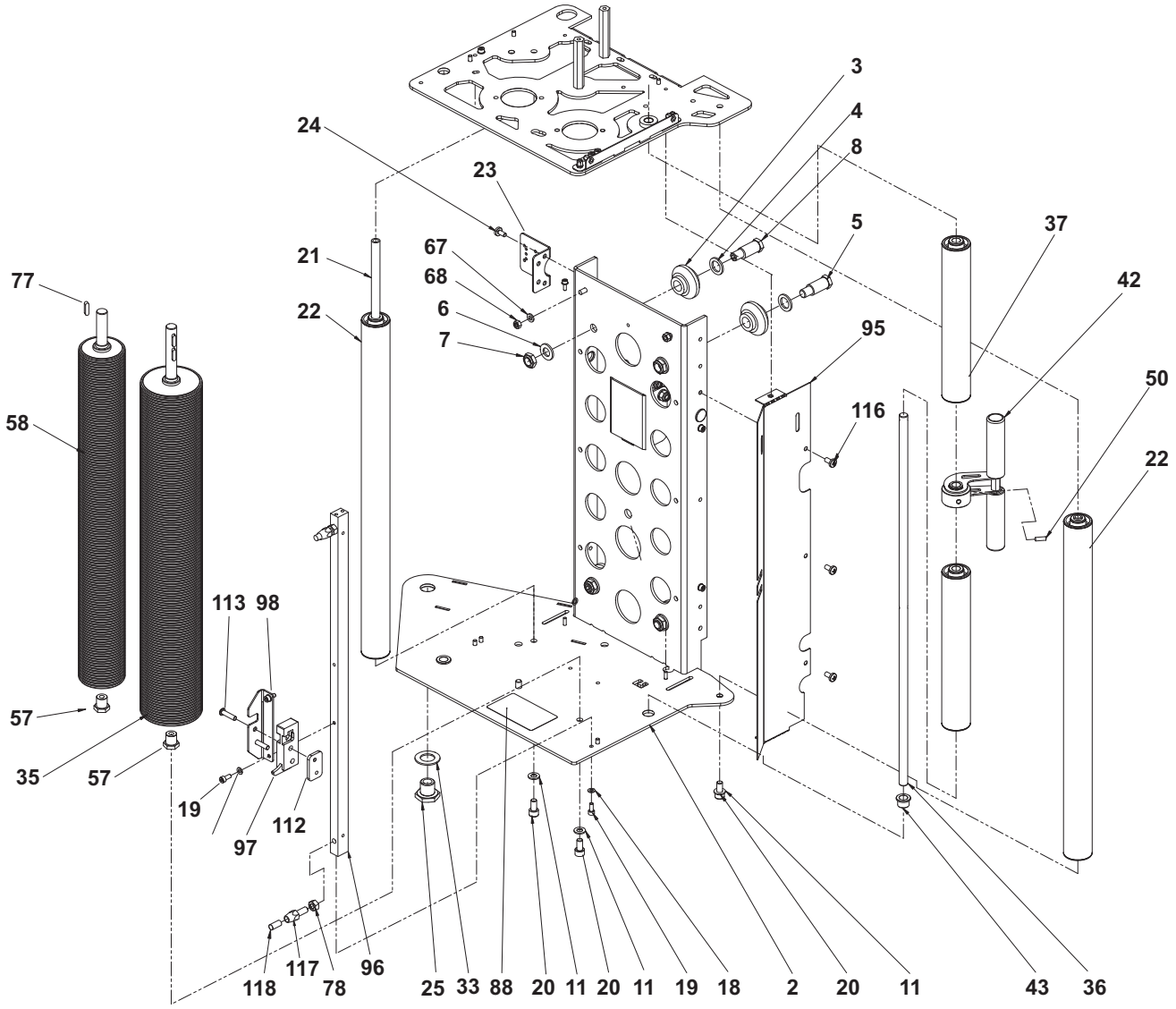
3
4
8
24
23
5
37
67
21
68
42
77
6
22
7
95
50
116
58
22
113
98
57
35
57
19
112
97
118
117
78
96
25
33
88
20
11
20
11
19
18
2
20
11
43
36

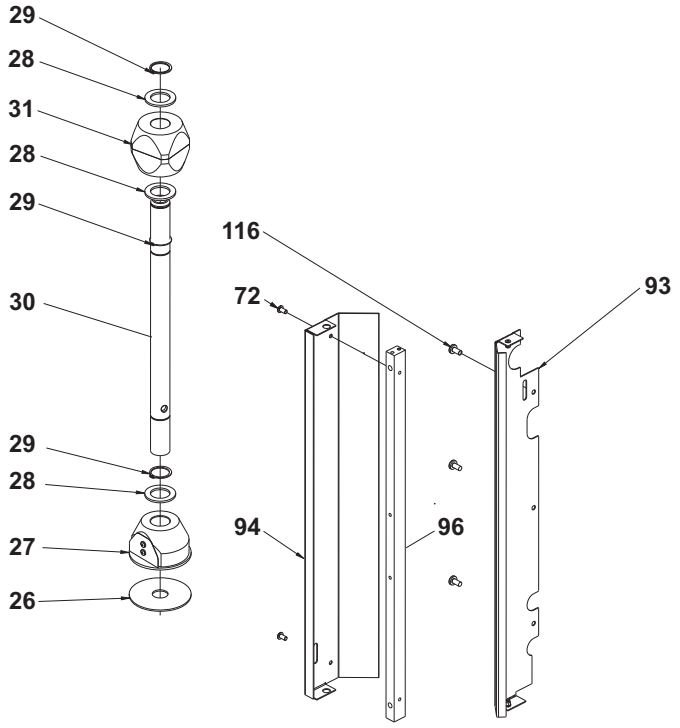
29
28
31
28
29
116
72
93
30
29
28
94
96
27
26

Fig. 15229 PORTABOBINA LP FAMF1SEMIAUTO F1 FASCIAPALLET PRESTIRO MOTORIZZATO

Pos.	Q.tà	Codice	Denominazione
52.1	1	SBC0012153	PERNO SPORTELLO INFER.
52.2	4	S340217593Z	VITE TBEI M5X10 KIT X K13
52.3	1	SBC0012150	PERNO SUPERIORE SPORT.
52.4	1	S3801095ZZZ	MANIGLIA M443/110
52.5	1	SBA0007386	SPORTELLO SALD.
52.6	1	SBC0012133	PERNETTO SERRATURA
52.7	1	SBC0012132	TIRANTE RULLO SPORT.
52.8	2	S340344893Z	VITE TBEI UNI 7380 M8X16 ZINCATA
52.9	1	SBA0007385	RULLO SPORT. C-CUSCIN.
52.10	1	S340174993Z	VITE TBEI M6X12 ZINCATA
52.11	2	S340017593Z	RONDELLA PIANA X VITE M6 ZINC.
52.12	2	S340023593Z	DADO M6 ZINCATO A BASSA RESIST.
52.13	2	S340057793Z	VITE TCEI M6X16 ZINCATA
52.14	2	S340013592Z	ANELLO DI ARRESTO X ALBERO BR.
53	1	SBC0009904	MOLLA TORSIONE BALLERINO
54	1	S3402906ZZZ	BUSS C/COLLARE /25/28X21 "IGUS GFM 2528
55	1	SBC0009868	COLONNINA ARRESTO LEVA DENT.
56	2	SCA0000887	SUPP C/CUSCIN. INA RATY 15
57	2	SBC0009899	PERNETTO CUSCINETTI INF. RULLI
58	1	SBA0006348	RULLO INSEGUIT. COMPL.
59	1	SBA0006344	INGRANAGGIO MOT. C-MOZZO
60	3	SBC0009870	COLONNINA SUPPORTO MOTORE
61	5	S340017592Z	RONDELLA PIANA X VITE M6,4 BR.
62	5	S340000293Z	DADO M6 ZINCATO
63	4	SBC0010760	RONDELLA PIANA Ø7/15x2
64	4	SBC0010285	VITE M6 SPECIALE C-COLLARE
65	3	S340061592Z	GRANO EIPP M5X5 BR.
66	2	S3402849ZZZ	LINGUETTA 5X5X18 UNI 6604 TRASP.TAPE
67	7	S340017593Z	RONDELLA PIANA X VITE M6 ZINC.
68	3	S340023593Z	DADO M6 ZINCATO A BASSA RESIST
69	2	SBA0007372	SQUADRETTA CARTER C-INS.
70	4	S340004393Z	RONDELLA PIANA X VITE M4 ZINC.
71	1	S340039098Z	VITE TCEI M4X12 INOX
72	6	S340217593Z	VITE TBEI M5X10 KIT X K13
73	1	S310108548Z	AMMORTIZZATORE X PORTALAMA K13-K14/3M
74	1	SCA0000898	PULEGGIA HTD 18 5M 15
75	1	SCA0000897	PULEGGIA HTD 72-5M-15
76	3	S340002698Z	VITE TE M6X16 INOX
77	1	S3400163ZZZ	LINGUETTA 5X5X20
78	5	S340000393Z	DADO M8 ZINCATO
79	1	SBC0012108	FLANGIA SUPP. MOT. AC 63
80	1	S380595900A	MOT H63-C4-B14 220/240V-380 /415V 50HZ-
80	1	S380751100A	MOTORE H63-C4-B14 440V 50HZ 3F
82	1	SCA0001080	CINGHIA DENTATA HTD 615-5M-15
83	4	S340011293Z	VITE TCEI M5X16 ZINCATA
84	1	S330595193Z	RONDELLA 5,5X/20X4
85	1	S340013093Z	VITE TSVEI M4X15 ZINCATA
86	1	S340130592Z	GRANO EIPP M4X5 K7
87	3	S340042093Z	VITE TCEI M4X16 ZINC.
88	1	SBC0012110	Etich. percorso film portabobina LP
89	1	SBC0012106	PERNO GALOPPINO
90	1	SBA0007370	GALOPPINO COMPL.
91	1	SBC0012156	RONDELLA SPEC. Ø12-24 SP.1
92	1	SCC0001699	FINECORSA DI SICUREZZA 1 NC "IMP 1"
93	1	SBA0007447	PANNELLO SX POST C-INS

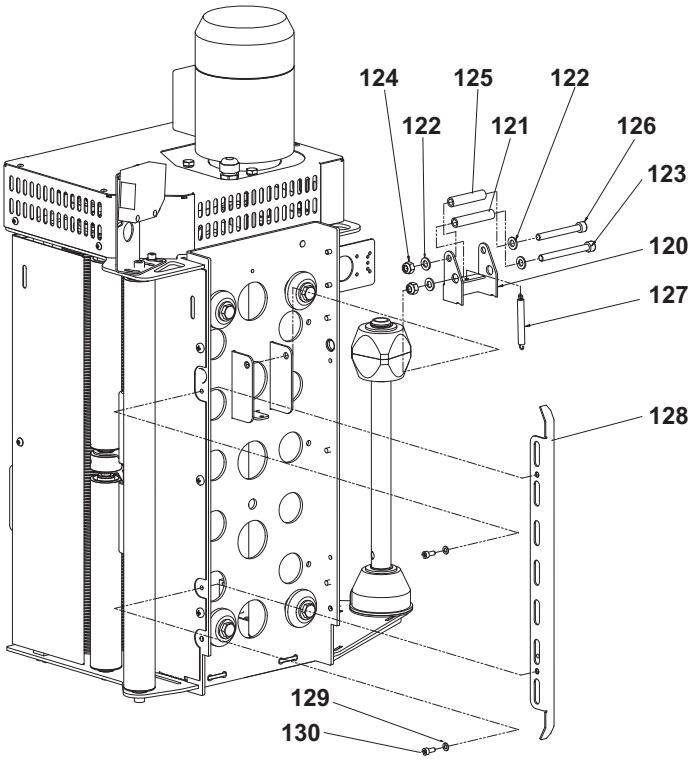
124
125
122
122
121
126
123
120
127
128
129
130

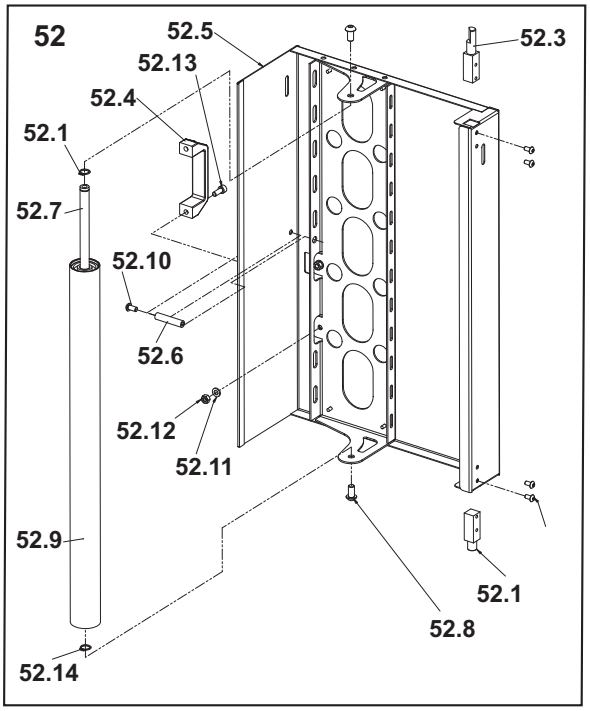
52
52.5
52.13
52.4
52.1
52.7
52.10
52.6
52.12
52.11
52.9
52.14
52.3
52.1
52.8

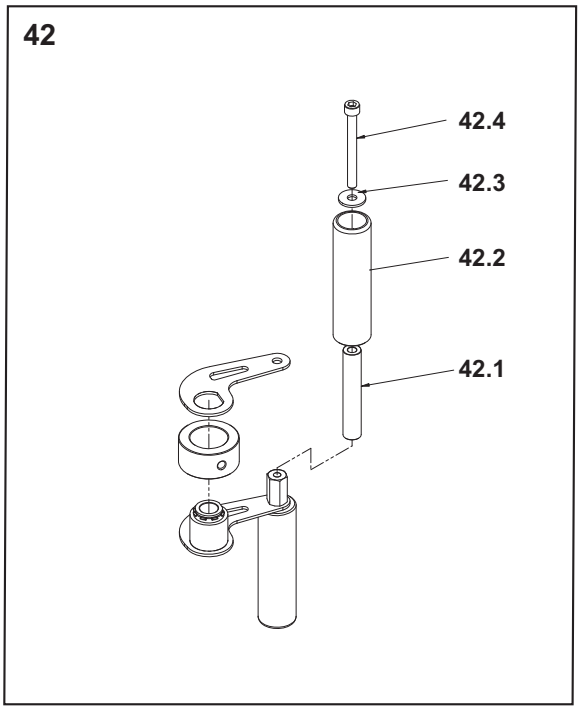
42
42.4
42.3
42.2
42.1

Fig. 15229 PORTABOBINA LP FAMF1SEMIAUTO F1 FASCIAPALLET PRESTIRO MOTORIZZATO

Pos.	Q.tà	Codice	Denominazione
94	1	SBC0012103	PANNELLO SX POST.
95	1	SBA0007449	PANNELLO DX C-INS
96	2	SBC0012096	TIRANTE SERRATURA
97	1	SCA0000733	CHIUSURA SOUTHCO R4-10-10-401-10
98	1	SBC0012101	SQUADRETTA FISS. AGGANCIO
99	2	S340220492Z	RANELLA DI SAFETY "S" (SCHNORR) /6 F144
100	1	SBC0012099	BASETTA FINECORSA
101	1	SBC0012098	PIASTRINA SUPP. POTENZIOMETRO
102	2	SBC0012097	COLONNINA SUPP. POTENZIOMETRO
103	1	S340003393Z	RONDELLA TRIPLA X VITE M6 ZINC
104	1	S340046893Z	RONDELLA TRIPLA X VITE M5 ZINC
105	1	SBC0012085	SQUADRETTA ATTACCO FOTOCELLULA
106	1	S380808900A	FTC TASTEGGIO CONN. M12 PNP N.C. TIPO S6R-5-C200-P
107	1	S340057793Z	VITE TCEI M6X16 ZINCATA
108	1	SBA0007393	CARTER SUPER. SALD
109	1	S3802139ZZZ	BOCCHETTONE SKINTOP ST11
110	1	SBC0012084	PANNELLINO MOTORE
111	1	S3802143ZZZ	CONTRODADO GMP11
112	1	SBC0012083	PIASTRINA BLOCC. CHIUSURA
113	2	S340316593Z	VITE TBEI M6X25 ZINCATA
114	2	S340031892Z	VITE M5 X 12
115	2	S340014293Z	VITE TCEI M4X25 ZINCATA
116	6	S340514093A	VITE TRILOBATE M6X12 TESTA TCBCR (TEXTR
117	2	SBC0012203	COLONNINA PARACOLPI
118	2	SBC0012204	CILINDRETTO PARACOLPI
119	1	S340039093Z	VITE TCEI M4X12 ZINCATA
120	1	S320926498A	CORPO FRENO WS100 INOX
121	1	S332208592A	PERNO ROTAZIONE FRENO WS100 BRUN.
122	13	S340012393Z	RONDELLA PIANA X VITE M8 ZINC.
123	1	S340129293Z	VITE TCEI M8X80 ZINC.
124	2	S340028393Z	DADO AUTOBLOCCANTE M8 ZINCATO
125	1	S332208492A	PERNO ATTACCO CINGHIA WS100 BRUN.WS100
126	1	S340091093Z	VITE TCEI M8X70 ZINC.
127	1	S370031898A	MOLLA FRENO WS3
128	1	S321644700A	CAMMA CARRELLO WS100
129	28	S340006193Z	RONDELLA PIANA X VITE M5 ZINC.
130	22	S340031893Z	VITE TCEI M5X12 ZINCATA

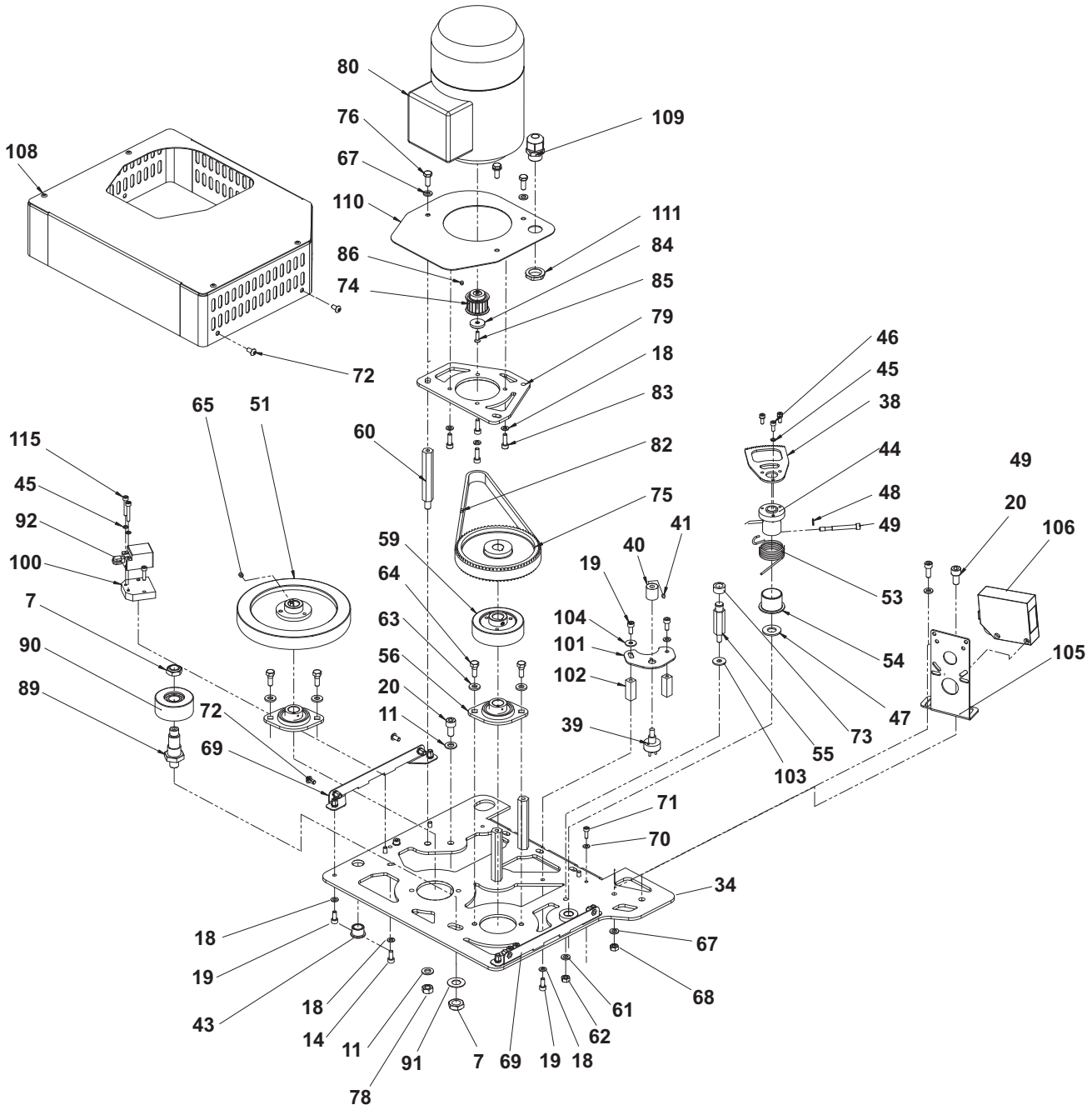
80
76
67
110
86
74
108
72
109
111
84
85
79
18
83
82
75
65
51
60
115
45
92
100
7
90
89
72
69
59
64
63
56
20
11
19
40
41
104
101
102
39
46
45
38
44
48
49
53
54
47
73
55
103
49
20
106
105
71
70
34
18
19
43
18
14
11
78
91
7
69
19
18
61
62
67
68

Portabobine: Freno Meccanico - Freno Elettromagnetico - EM

Pos.	Q.tà	Codice	Denominazione
1	1	SBA0007166	FISSAGGIO BASCULANTE SW1 EM-M-FM C-INS.
2	1	SBC0011671	PANNELLO BASCULANTE SW1 EM-M-FM
3	2	S340057793Z	VITE TCEI M6X16 ZINCATA
4	1	S340316593Z	VITE TBEI M6X25 ZINCATA
5	3	SCA0000133	Vite TBEI M6x20 ISO 7380 Zinc.
6	1	SCC0001627	PASSACAVO IN GOMMA "EZ" ART.11087
7	1	SBC0011534	CAMMA MICRO SICUREZZA
8	1	SBA0007169	SQUADRETTA FISS. MICRO SICUREZZA C-INS
9	1	SCC0001605	FINECORSA DI SICUREZZA 1 NC "IMP 2"
10	2	S340055893Z	RONDELLA PIANA X VITE M3 ZINC.
11	2	S340319193Z	VITE TCEI M3X8 ZINCATA
12	1	S340217593Z	VITE TBEI M5X10 KIT X K13

Portabobina Prestiro Meccanico

Pos.	Q.tà	Codice	Denominazione
1	1	SBA0007167	FISSAGGIO BASCULANTE SW1 SM C-INS.
2	1	SCC0001605	FINECORSA DI SICUREZZA 1 NC "IMP 2"
3	1	SBA0007169	SQUADRETTA FISS. MICRO SICUREZZA C-INS
4	1	SBC0011675	BORDINO CHIUSURA FISSO SW1 SM
5	1	SBA0007168	PANNELLO BASCULANTE SW1 SM COMP.
6	1	SCC0001627	PASSACAVO IN GOMMA "EZ" ART.11087
7	1	S340217593Z	VITE TBEI M5X10 KIT X K13
8	2	S340057793Z	VITE TCEI M6X16 ZINCATA
9	1	S340316593Z	VITE TBEI M6X25 ZINCATA
10	3	SCA0000133	Vite TBEI M6x20 ISO 7380 Zinc.
11	1	SBC0011534	CAMMA MICRO SICUREZZA
12	2	S340055893Z	RONDELLA PIANA X VITE M3 ZINC.
13	2	S340319193Z	VITE TCEI M3X8 ZINCATA

Portabobina LP Prestiro Motorizzato

Pos.	Q.tà	Codice	Denominazione
1	1	SBA0007368	PANNELLO BASCUL. SALD
2	1	S340096593Z	VITE TCEI M6X8 AF46
3	1	SCC0001605	FINECORSA DI SICUREZZA A+B "IMP 1"
4	2	S340017593Z	RONDELLA PIANA X VITE M6 ZINC.
5	2	S340023593Z	DADO M6 ZINCATO A BASSA RESIST
6	1	S340041993Z	VITE TCEI M6X10 ZINCATA
7	2	S340003393Z	RONDELLA TRIPLA X VITE M6 ZINC
8	2	SBC0012086	COLONNINA PERNO PANNELLO
9	2	S340319193Z	VITE TCEI M3X8 ZINCATA
10	2	S340055893Z	RONDELLA PIANA X VITE M3 ZINC.
11	2	S340217593Z	VITE TBEI M5X10 KIT X K13
12	1	SBA0007155	SQUADRETTA FISS C-INS
13	1	SBC0011534	CAMMA MICRO SICUREZZA
14	1	S340006193Z	RONDELLA PIANA X VITE M5 ZINC.
15	1	S340031893Z	VITE TCEI M5X12 ZINCATA

Portabobina Freno Meccanico
Portabobina Freno Elettromagnetico
Portabobina EM

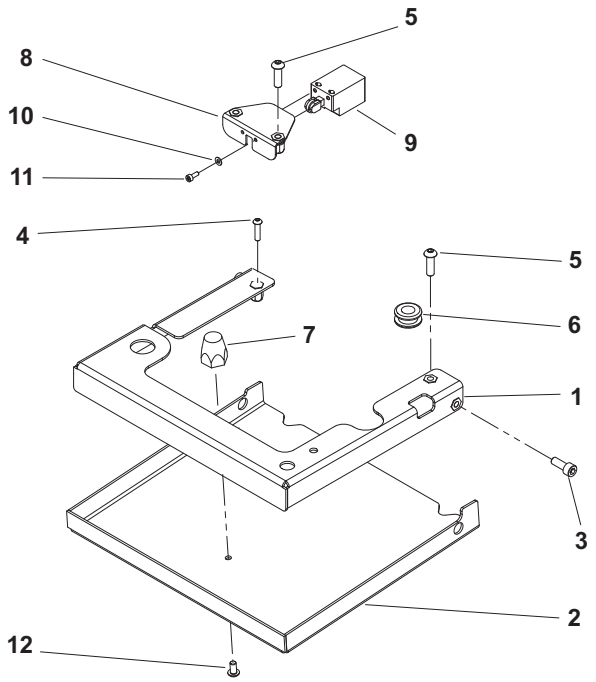

Portabobina Prestiro Meccanico

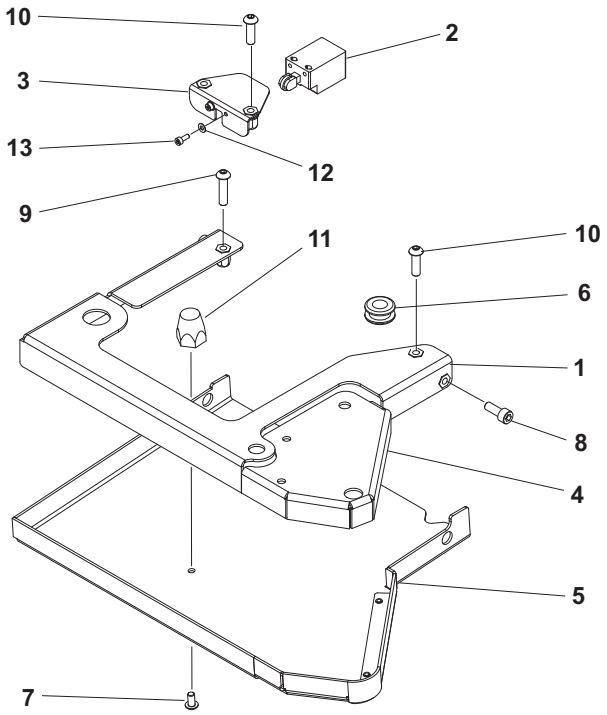

Portabobina LP Prestiro Motorizzato

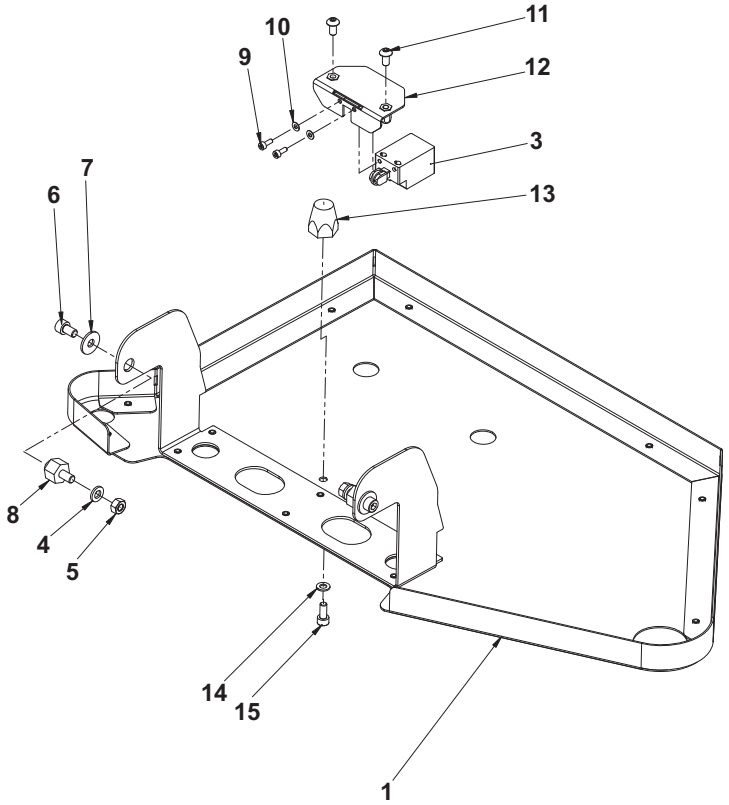

Fig. 15227 GRUPPO COLONNA FAMF1SEMIAUTO F1 FASCIAPALLET

Pos.	Q.tà	Codice	Denominazione
1	1	SBA0003514	GRUPPO COLONNA C/INS. WS100 H 2100
1	1	SBA0003453	GRUPPO COLONNA C/INS. H 2400
2	1	SBC0000500	SUPPORTO RULLINO DI RINVIO
3	2	S340514093A	VITE TRILOBATE M6X12 TESTA TCBCR (TEXTR
4	1	SBC0000499	ALBERINO RULLINO DI RINVIO
5	1	SBC0000502	RULLINO DI RINVIO
6	5	SCA0000044	ROSETTA ELASTICA 8.4x14.4 UNI 1751 A
7	1	SCA0000108	VITE TE M8X90
8	1	S340028393Z	DADO AUTOBLOCCANTE M8 ZINCATO
9	1	S321635200A	DISTANZIALE PER SUPPORTO UBPF203 WS100
10	1	S3403414ZZZ	SUPPORTO FLANGIATO UBPF 203/NSK
11	3	SCA0000133	Vite TBEI UNI ISO 7380 M6x20
12	11	S340017593Z	RONDELLA PIANA X VITE M6
13	7	S340000293Z	DADO M6 ZINCATO
14	1	S471428200A	PULEGGIA C/ALBERO PREM. WS1 H=2100
14	1	SBA0003451	PULEGGIA C/ALBERO PREM. WS1 H=2400
15	1	S3403210ZZZ	SUPPORTO "NSK UBPF-205"
16	3	S340004892Z	VITE TSVEI M8X15 BR
17	1	S3805202ZZZ	RIDUTT."MOTOVARIO NMRV-040i1 PAM63B5"
18	1	SBC0005100V	STAFFA DI REAZIONE
19	4	S340005192Z	VITE TCEI M6X12 BRUN.
20	5	S340006292Z	RONDELLA PIANA X VITE M12 BRU.
21	1	S340223393Z	DADO SPEC.AUTOBLOCC. M12 P.1
22	2	S450528047Z	SQUADRETTA MICRO C/INS.WS100
23	4	S340217593Z	VITE TBEI M5X10 KIT X K13
24	2	S3802063ZZZ	FINE CORSA D4MC-5020
25	4	S340090493Z	VITE TSVEI M4X35 ZINCATA
26	4	S340004392Z	RONDELLA PIANA X VITE M4 BRUN.
27	4	S340023392Z	DADO M4 BRUN.
28	2	S332635000A	GUIDA CARRELLO WS100 H 2100
28	2	SBC0005099	GUIDA CARRELLO H 2400
30	1	SBC0005277	PIASTRA DI TESTA MW2
31	8	S340198093Z	VITE TCBCR M5X12 ZINC.100a/3M
32	1	SBC0010794V	CAPPELLO COLONNA SW1-F1
36	1	S321634600A	SPORTELLO QUADRO
37	1	S440857000A	PIASTRA COLONNA WS100
38	4	S340198493Z	VITE TCEI M12X20 ZINC.
40	4	S340174993Z	VITE TBEI M6X12 ZINC.
41	1	S380582600A	BOCCHETTONE PRESSACAVO M20X1,5 GRIGIO
42	1	S380594400A	BOCCHETTONE PRESSACAVO M25X1.5 GRIGIO
43	1	S380594900A	DADO PER BOCCHETTONE M25X1.5 GRIGIO
44	1	S380594800A	DADO PER BOCCHETTONE M20X1.5 GRIGIO
45	1	SBC0005098	STAFFA SUPPORTO MICRO

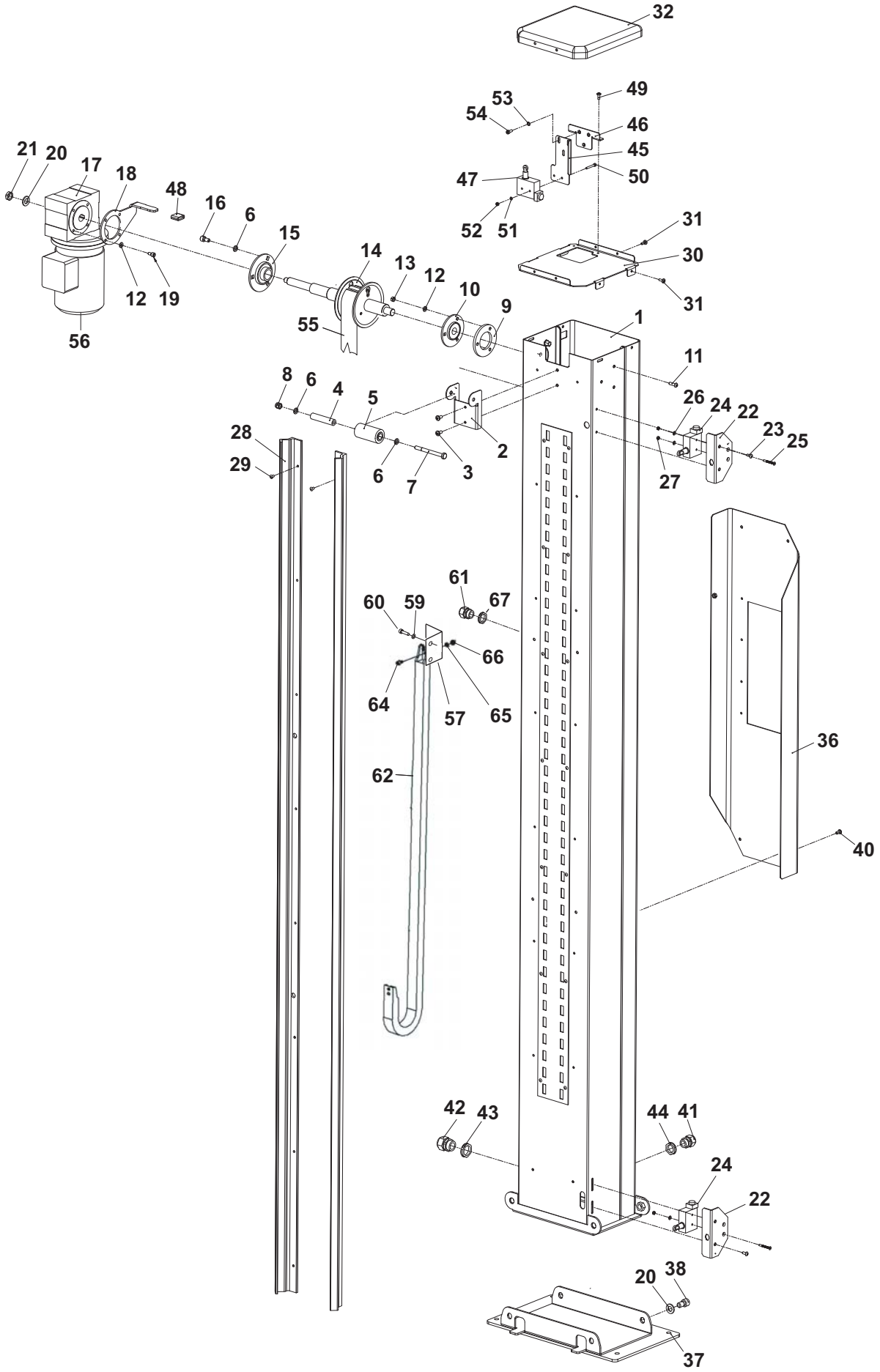
32
49
53
54
46
45
50
47
52
51
31
30
31
21
20
17
18
48
16
6
15
14
13
12
10
9
12
19
56
55
1
11
8
6
4
5
26
24
22
23
25
28
29
2
6
7
3
27
61
67
60
59
66
64
57
65
36
62
40
42
43
44
41
24
22
20
38
37

Fig. 15227 GRUPPO COLONNA FAMF1SEMIAUTO F1 FASCIAPALLET

Pos.	Q.tà	Codice	Denominazione
46	1	SBA0003450	STAFFA SUPPORTO CON INSERTI
47	1	S3802063ZZZ	FINE CORSA D4MC 50020
48	1	S3801649ZZZ	TUBO RITORNO EST./19 INT./14
49	2	S340513993A	VITE TRILOBATA M5X12 TESTA TCBCR (TEXTR
50	2	S340022993Z	VITE TCEI M4X30 ZINCATA
51	2	S340220292Z	RANELLA DI SAFETY "S" (SCHNORR) /4 F144
52	2	S340000193Z	DADO M4 ZINCATO
53	3	S340220392Z	RANELLA DI SAFETY "S" (SCHNORR) /5 F144
54	3	S340031893Z	VITE TCEI M5X12 ZINCATA
55	1	S310151200A	CINGHIA SOLLEVAMENTO COL. H 2100
55	1	S310197100A	CINGHIA SOLLEVAMENTO COL. H 2400
		Macchina conforme alle direttive CEE / Machine conforme aux normes CEE Machine conforme to CEE rules / Maschine gemaess EEG Richtlinien	
56	1	SCC0000094	MOTORE MDC 71 S1 CLASSE F PASTIGLIA TER. 230 V 60 HZ 1PH
56	1	SCC0000098	MOTORE MDC 71 A6 B5 S1 RID. 63 PAST. TERM. 230/240 V 50 HZ 1PH
56	1	SCC0000095	MOTORE H63 C6 B5 S1 CLASSE F PAST. TERM. 200 V 50/60 HZ 3PH - 230 V 60 HZ 3PH
56	1	SCC0000097	MOTORE H63C6 B5 S1 CLASSE F PAST. TERM. 440 V 50 HZ 3PH+N
56	1	SCC0000096	MOTORE H63 C6 B5 S1 CLASSE F PAST. TERM. 230/240 V 50 HZ 3PH - 400 V 50 HZ 3 PH 400/415 V 50 HZ 3PH+N - 440 V 60 HZ 3PH+N
		Macchina non conforme alle direttive CEE / Machine pas conforme aux normes CEE Machine not conforme to CEE rules / Maschine nicht gemaess EEG Richtlinien	
56	1	SCC0000094	MOTORE MDC 71 S1 CLASSE F PASTIGLIA TER. 230 V 60 HZ 1PH
56	1	SCC0000098	MOTORE MDC 71 A6 B5 S1 RID. 63 PAST. TERM. 230/240 V 50 HZ 1PH
56	1	SCC0000095	MOTORE H63 C6 B5 S1 CLASSE F PAST. TERM. 200 V 50/60 HZ 3PH - 230 V 60 HZ 3PH
56	1	SCC0000097	MOTORE H63C6 B5 S1 CLASSE F PAST. TERM. 440 V 50 HZ 3PH+N
56	1	SCC0000096	MOTORE H63 C6 B5 S1 CLASSE F PAST. TERM. 230/240 V 50 HZ 3PH - 400 V 50 HZ 3 PH 400/415 V 50 HZ 3PH+N - 440 V 60 HZ 3PH+N
56	1	SCC0000044	MOTORE MDC 71 A6 B5 ALBERO/FLANGIA RID. 115 V 60 Hz 0,18 KW PAST. TERMICA
57	2	S321669600AV	SQUADRETTA ATTACCO CATENA WS
59	6	S340002493Z	RONDELLA ELASTICA PER VITE M6 ZINC.
60	5	S340057793Z	VITE TCEI M6 X 16 ZINCATA
61	1	S380594300A	BOCCHETTONE PRESSACAVO M6X1,5 GRIGIO
62	1	S340522000A	CAT. PORTACAVI 0202,50-1160-MA-FI
64	4	S340029193Z	VITE TCEI M3x10 ZINC.
65	4	S340055893Z	RONDELLA PIANA PER VITE M3 ZINC.
66	4	S340169693Z	DADO M3 ZINC.
67	1	S380594700A	DADO PER BOCCHETTONE M16x1,5 GRIGIO

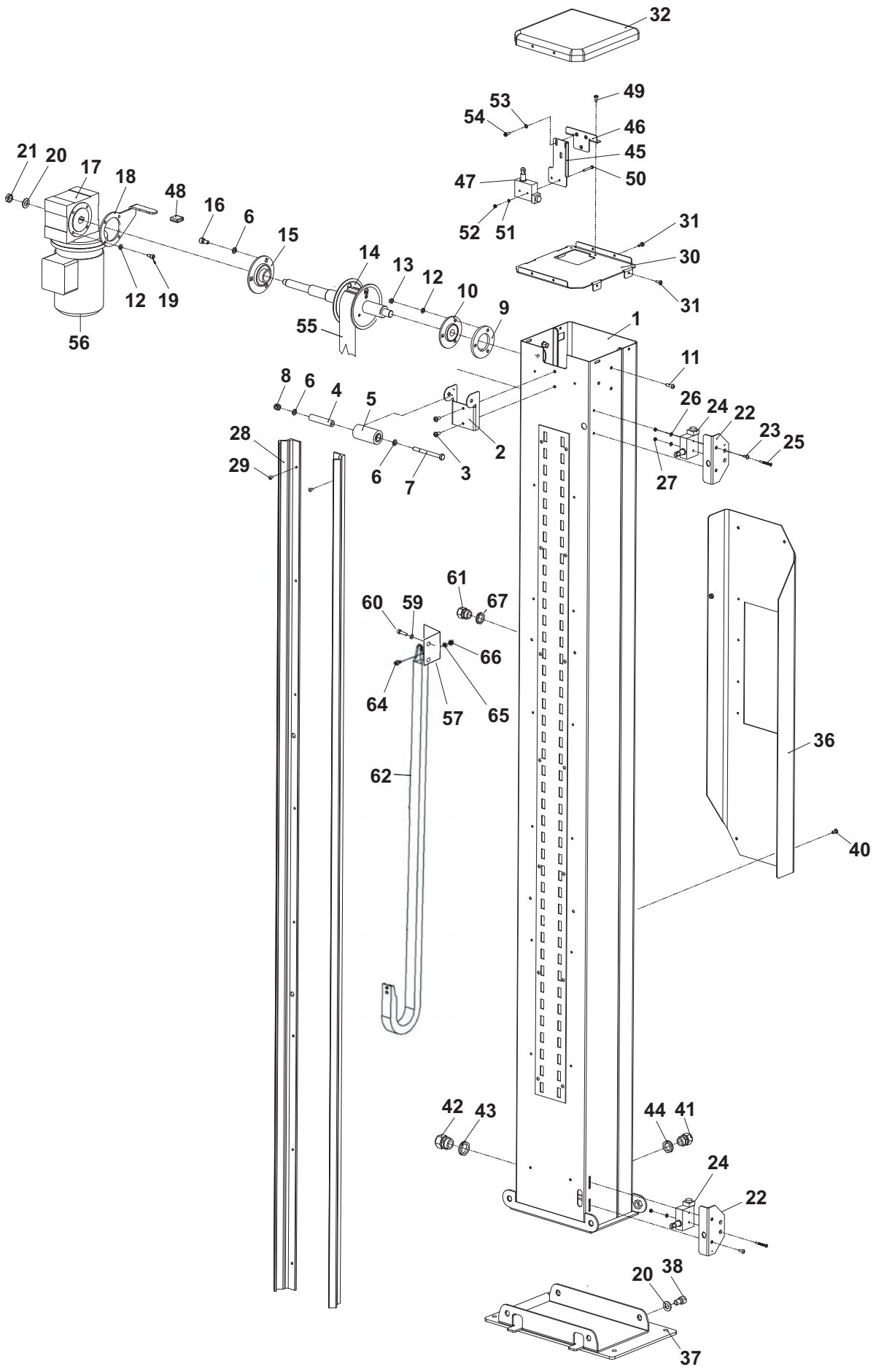
32
49
53
54
46
45
50
47
52
51
31
30
31
21
20
17
18
48
16
6
15
14
13
12
10
9
12
19
56
55
1
11
8
6
4
5
26
24
22
23
25
28
29
2
3
6
7
27
61
67
60
59
66
64
57
65
36
62
40
42
43
44
41
24
22
20
38
37

Fig. 15228 GRUPPO PIATTAFORMA FAMF1SEMIAUTO F1 FASCIAPALLET

Pos.	Q.tà	Codice	Descrizione
1	1	S440931847A	BASE COMP. WS16 PIATTAFORMA DIA. 1650
1	1	S440936547A	BASE COMP. PIATTAFORMA DIA. 1800
1	1	S440857500AV	BASE COM. PIATTAFORMA DIA. 1500
2	1	S3401776ZZZ	CUSCINETTO 6211 2RS
3	1	S440852300A	CORONA 3/4 Z 55 COMP- WS 150
4	1	S440863640A	PIATTAFORMA ROTANTE COMP. WS\65 DIA. 1650
4	1	S440943740A	PIATTAFORMA ROTANTE DIA. 1800
4	1	S440910340A	PIATTAFORMA ROTANTE DIA. 1500
5	6	S340078293Z	VITE TSVEI M10X30
6	2	SBC0006038T	CAMMA PIATTAFORMA WS3
7	8	S340017593Z	RONDELLA PIANA PER VITE M6 ZINC.
8	4	S340001593Z	VITE TCEI M6X25 ZINC.
9	4	S340028493Z	DADO M6 BASSO ZINC.
10	1	S340513200A	CAT. RING. CHIUSO 3/4" P= 196 COMPRESO GIUNTO (P. DIA. 1500)
10	1	S340513300A	CATENA 3/4 SPEZZONE DA P=204 COMPRESO GIUNTO (P. DIA. 1650)
10	1	S340524500A	CATENA 3/4 SPEZZONE DA P=212 COMPRESO GIUNTO (P. DIA. 1800)
11	1	S471428500A	RIDUTTORE PREMONT. WS2
12	4	S340012393Z	RONDELLA PIANA PER VITE M8 ZINC.
13	4	S340028093Z	VITE TE M8 X 20 ZINC.
14	1	S340006293Z	RONDELLA PIANA PER VITE M12 ZINC.
15	1	S340297593Z	VITE TE M12 X180 TUTTO FILETTO AF47
16	24	S331452492C	PERNO RUOTE WS3 GR. PIATTAFORM. BRUNITO
17	48	S3402778ZZZ	DISTANZIALE LATERALE RUOTE WS3
18	48	SBC0000633	ROTELLA C/CUSCINETTO
19	24	S3402779ZZZ	DISTANZIALE CENTRALE RUOTE WS3
20	1	S321644647A	PANNELLO D'ISPEZIONE WS150 PIATTAF. DIA. 1650
20	1	S321680247A	PANNELLO D'ISPEZIONE PIATTAF. DIA. 1800
20	1	S321644647A	PANNELLO D'ISPEZIONE PIATTAF. DIA. 1500
21	4	S340514093A	VITE TRILOBATE M6X12 TESTA TCBCR
22	1	S3802063ZZZ	FINECORSA D4MC-5020
23	2	S310227400A	PATTINO CATENA DX
24	2	S340514093A	VITE TCBCR M6X12
25	1	S310227500A	PATTINO CATENA SX
27	1	S3801454ZZZ	CUSTODIA DA PANNELLO PASSANTE
28	1	SCC0000024	INSERTO X CONTATTI M. 5P+T A CRIMP. CQ
29	1	SBA0007357	STAFFA FISSAGGIO CARTER VSF SW1 C/INS.
30	1	SBC0012017	CARTER RIDUTTORE VSF BASI SW1
31	4	S340016093Z	VITE TCEI M6X20 ZINCATA
32	4	S340174993Z	VITE TBEI M6X12 ZINC.
33	4	S340017593Z	RONDELLA PIANA X VITE M6 ZINC.
34 (*)	1	SBA0007311	MOTORIDUTT. VSF PREM. BASI 15-16-18
34 (**)	1	SBA0009106	MOTORIDUTT. VSF PREM. BASI 15-16-18
35	1	S380621600A	MOTORE H71 C4 B14 220/240 V - 380/415 V 50 HZ / 415 V 50 HZ 440 V 60 HZ 3 F 0,55 KW
35	1	S380626400A	MOTORE H71 C4 B14 440 V 50 HZ 3F 0,55 KW

(*) Macchina conforme alle Direttive CEE / Machine conforme aux normes CEE / Machine conforme to CEE rules / Maschine gemaess EEG Richtlinien

(**) Macchina non conforme alle Direttive CEE / Machine pas conforme aux normes CEE / Machine not conforme to CEE rules / Maschine nicht gemaess EEG Richtlinien

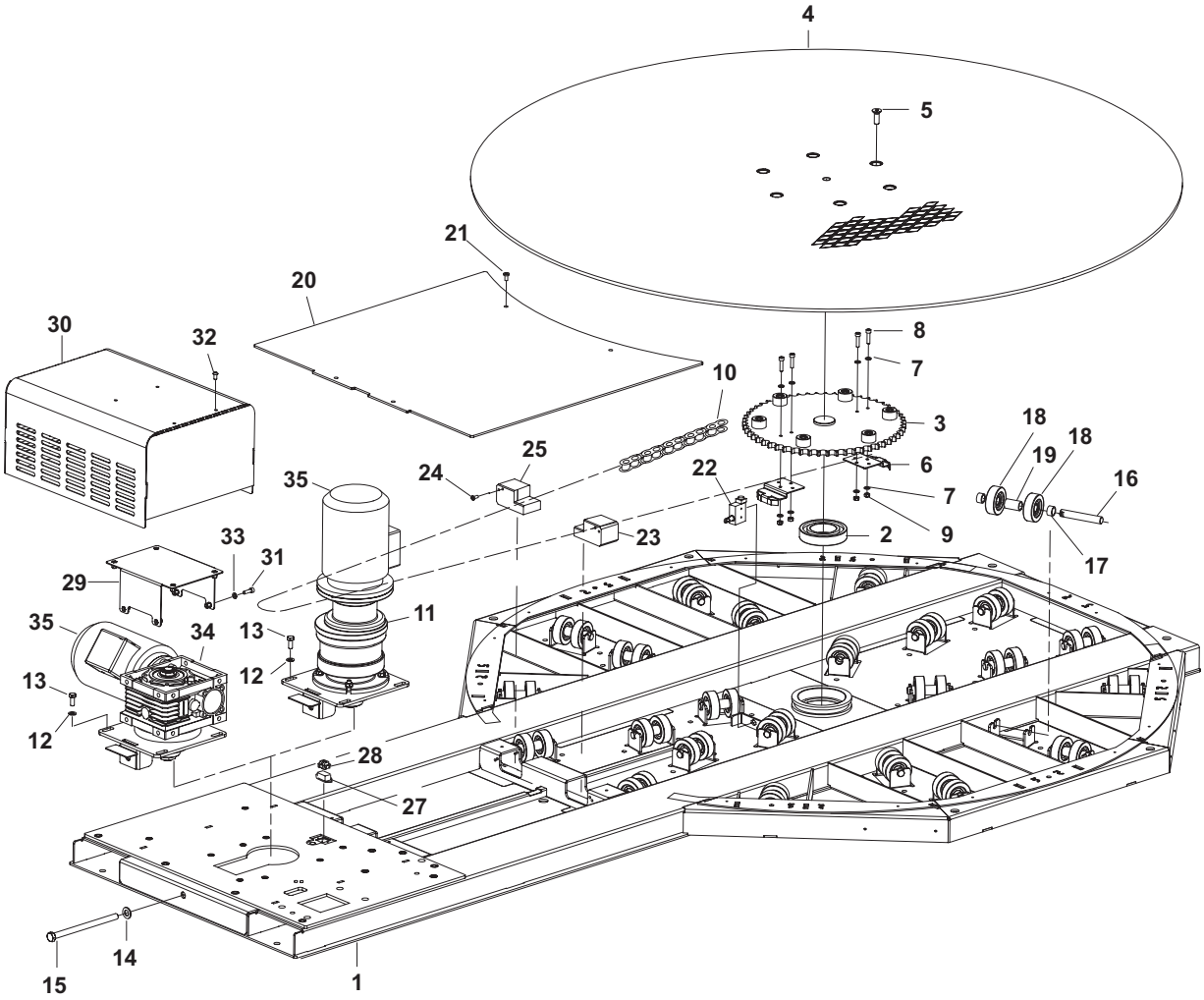
4
5
21
20
30
32
8
7
10
3
18
18
19
6
16
25
24
22
7
35
9
2
23
33
31
17
29
11
35
34
13
13
12
12
28
27
14
15
1

Fig. 15228/1 GRUPPO PIATTAFORMA FAMF1SEMIAUTO F1 FASCIAPALLET

Pos.	Q.tà	Codice	Descrizione
1	1	S450591547Z	BASE C/INSERTI
2	1	S471428900A	RIDUTTORE PREMONTATO
3	7	S340012393Z	RONDELLA PIANA PER VITE M8 ZINC.
4	4	S340028093Z	VITE TE M8X20 ZINCATA
5	1	S340524800A	CAT. 1/2X5/16 SPEZZ. P=122 COMPRESA
6	1	S4204254ZZZ	PATTINO STRISCIAMENTO DX C/BIADESIVO
7	2	S470993000A	BRACCIO PREM. HS312
8	1	S4204255ZZZ	PATTINO STRISCIAMENTO SX C/BIADESIVO
9	1	S321680547A	PASTRA CENTRALE
10	3	S340028093Z	VITE TE M8X20 ZINCATA
11	2	S470993500A	TIRANTE MOLLA PREM. HS312
12	2	S331821493A	PIATTO SUPPORTO MOLLA ZINC. HS312
13	4	S340040393Z	VITE TSVEI M5X16 ZINCATA
14	4	S340316593Z	VITE TBEI M6X25 ZINCATA
15	6	S3403390ZZZ	RING DI COMPENSAZIONE LMKAS 26 /25,8-1
16	6	S320698993A	RONDELLA ALBERINO PROTEZ. APS
17	2	S340514093A	VITE TRILOBATA M6X12 TESTA TCBCR
18	1	SCC0001606	FOTOCELLULA /18 NO 24 VAC MVP/A0-0A
19	1	SCC0001607	FOTOCELLULA /18 NC 24 VAC MVP/C0-0A
20	1	S320890047A	SUPP. FTC SAFETY HSD312 VERN.
21	4	S340006193Z	RONDELLA PIANA PER VITE M5 ZINCATA
22	2	S340513993A	VITE TRILOBATA M5X12 TESTA TCBCR
23	1	S4204303ZZZ	SUPP. C/CATARINFRANGENTE HSD312
24	4	S340198093Z	VITE TCBCR M5X12 ZINC. 100a/3M
25	1	S321680847A	PANNELLO D'ISPEZIONE
26	1	S3401776ZZZ	CUSCINETTO 6211 RS
27	1	S471135200A	PIATTAFORMA ROTANTE PREMONT. HSD312
28	4	S340191992Z	GRANO EIPP M10X40XL
29	4	S340190692Z	GRANO EIPP M10X10 WS3
30	4	S340190493Z	GOLFARE DI SOLLEVAMENTO M10
31	1	S320891747A	RAMPA VERN. HSD312
32	2	S340021993Z	RONDELLA PIANA PER VITE M10 ZINCATA.
33	2	S340065093A	VITE TE M10X16 ZINCATA
34	1	S340006293Z	RONDELLA PIANA PER VITE M12 ZINC.
35	1	S340297593Z	VITE TE M12X180 TUTTO FILETTO AF47
40	42	S3402778ZZZ	DISTANZIALE LATERALE RUOTE WS3
41	42	SBC0000633	ROTELLA C/CUSCINETTO LAVORATA WS
42	21	S331452492C	PERNO RUOTE WS3 GR. PIATTAF. BRUNITO
43	21	S370033693A	MOLLA FERMO RUOTE HS312
44	21	S3402779ZZZ	DISTANZIALE CENTRALE RUOTE WS3
45 (*)	1	SBA0007313	MOTORIDUTT. VSF BASI HSD
45 (**)	1	SBA0009969	MOTORIDUTT. VSF BASI HSD
46	1	SBA0007357	STAFFA FISSAGGIO CARTER VSF SW1 C/INS.
47	1	SBC0012017	CARTER RIDUTTORE VSF BASI SW1
48	4	S340174993Z	VITE TBEI M6X12 ZINC.
49	4	S340017593Z	RONDELLA PIANA X VITE M6 ZINCATA
50	4	S340016093Z	VITE TCEI M6X20 ZINCATA
51	1	S3802510ZZZ	SCATOLA DI DERIVAZIONE 65X65
52	0,41	S3801480ZZZ	MORSETTIERA NYLON D.10 12 PEZZI
53	2	S340123993Z	VITE TCBCR M4X8 ZINCATA
54	1	S380621600A	MOTORE H71 C4 B14 220/240 V - 380/415 V 50 HZ / 415 V 50 HZ 440 V 60 HZ 3 F 0,55 KW
54	1	S380626400A	MOTORE H71 C4 B14 440 V 50 HZ 3F 0,55 KW
54	1	SCC0002115	MOT.71B4 B14 C105 0.37Kw230/400V 50Hz

(*) Macchina conforme alle Direttive CEE / Machine conforme aux normes CEE / Machine conforme to CEE rules / Maschine gemaess EEG Richtlinien

(**) Macchina non conforme alle Direttive CEE / Machine pas conforme aux normes CEE / Machine not conforme to CEE rules / Maschine nicht gemaess EEG Richtlinien

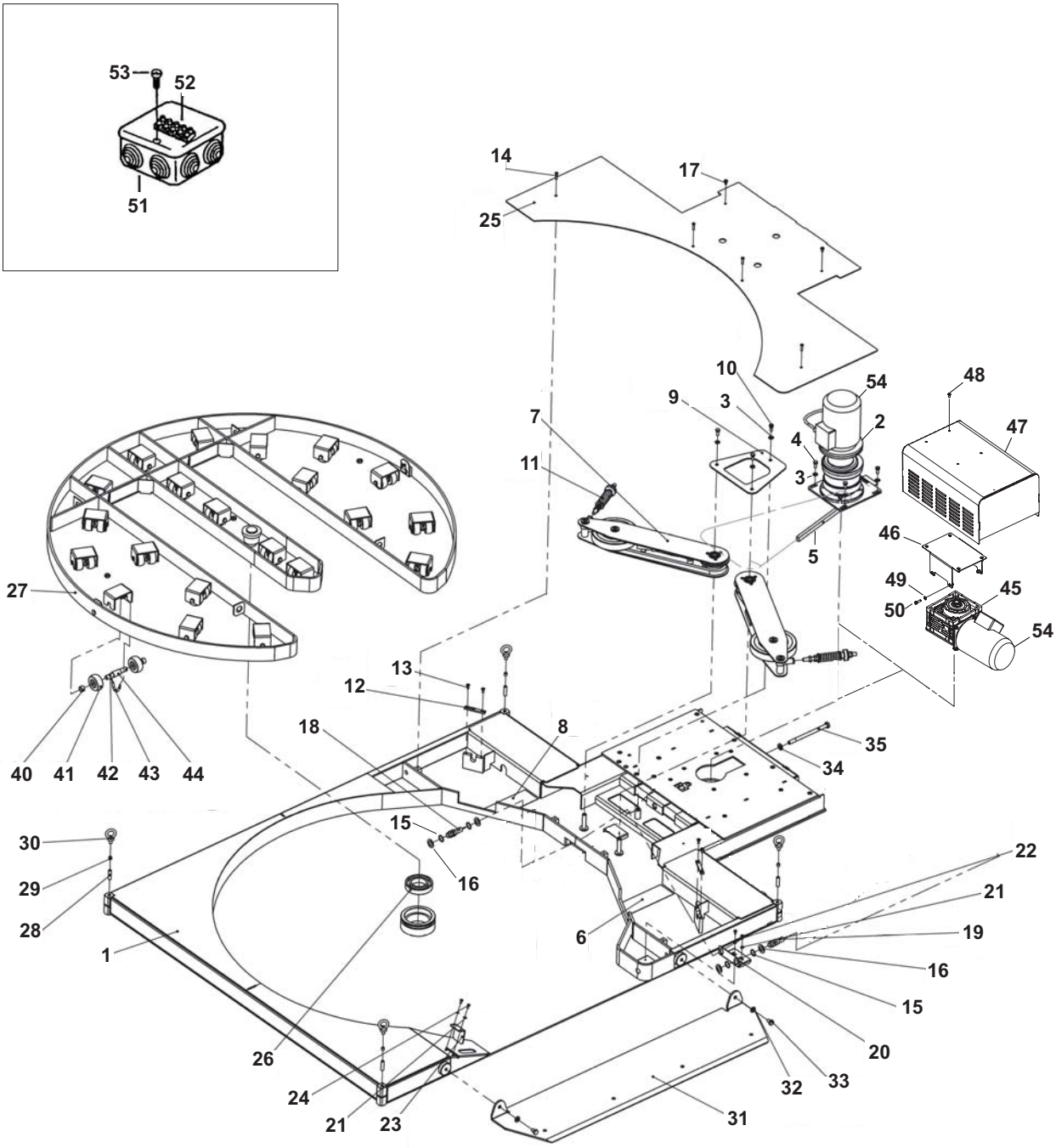
53
52
51
14
17
25
10
54
48
9
3
2
47
7
4
11
3
46
5
27
49
45
50
54
13
12
18
8
35
34
40
41
42
43
44
15
30
16
22
29
21
28
6
19
1
16
15
20
26
33
32
24
31
21
23

Fig. 15228/2 GRUPPO PIATTAFORMA FAMF1SEMIAUTO F1 FASCIAPALLET

Pos.	Q.tà	Codice	Denominazione
			Pos. 7
1	2	S440639747A	PIASTRA BRACCIO INF. VERN. HS312
2	2	S340101693Z	TESTA A SNODO M12X1,25 ZINCATA
3	4	S4304850ZZZ	FLANGIA BRACCIO C/CUSCINETTO HS312
4	4	S340037093Z	VITE TSVEI M5X10 ZINCATA
5	2	S331824200A	PERNO RINVIO TRASMISSIONE HS312
6	4	S340006892Z	ANELLO DI ARRESTO PER ALBERO 20 BR.
7	2	S4304849ZZZ	PIGNONE DOPPIO C/CUSCINETTO HS312
8	2	S470993100A	RUOTA DI FRIZIONE ASS. HS312
9	2	S320605693A	RONDELLA /20 WS3
10	2	S3401240ZZZ	BRONZINA
11	2	S470993200A	TENDITORE PREM. HS312
12	2	S330802792Z	RONDELLA SPECIALE T302 SP.
13	1	S340057793Z	VITE TCEI M6X16 ZINCATA
14	1	S340000393Z	DADO M8 ZINCATO
15	2	S340170393Z	VITE TCEI M8X70 TUTTO FIL. 200A-700A 3M
16	2	S331822793A	DISTANZIALE SNODO HS312
17	2	S320742147A	PIASTRA BRACCIO SUPERIORE HS312
18	2	S331823893A	RONDELLA /8 SP. 4 mm HS
19	2	S340012293Z	VITE TCEI M8X20 ZINCATA
20	2	S3403043ZZZ	SPEZZ. CAT. 1/2 X 5/16 84 MAGL. GIUNTO A
			Pos. 11
1	2	S331824792A	TIRANTE MOLLA
2	2	S331824900A	BUSOLA ANTERIORE PORTAMOLLA HS312
3	2	S331825000A	BUSSOLA POSTERIORE PORTAMOLLA HS312
4	2	S310173800A	RONDELLA AMMORTIZZ. HS312
5	2	S320750893A	RONDELLA /40-12,5 SP. 4 MM HS312
6	2	S310182100A	RONDELLA /12,5 PARACOLPI HS3
7	3	S340089193Z	DADO M12
8	1	S340073593Z	DADO M12 AUTOBLOCCANTE
9	2	S3403039ZZZ	MOLLA PER STAMPI RED /16/32X76 R32-076IS

Pos. 7, Fig. 15228/1

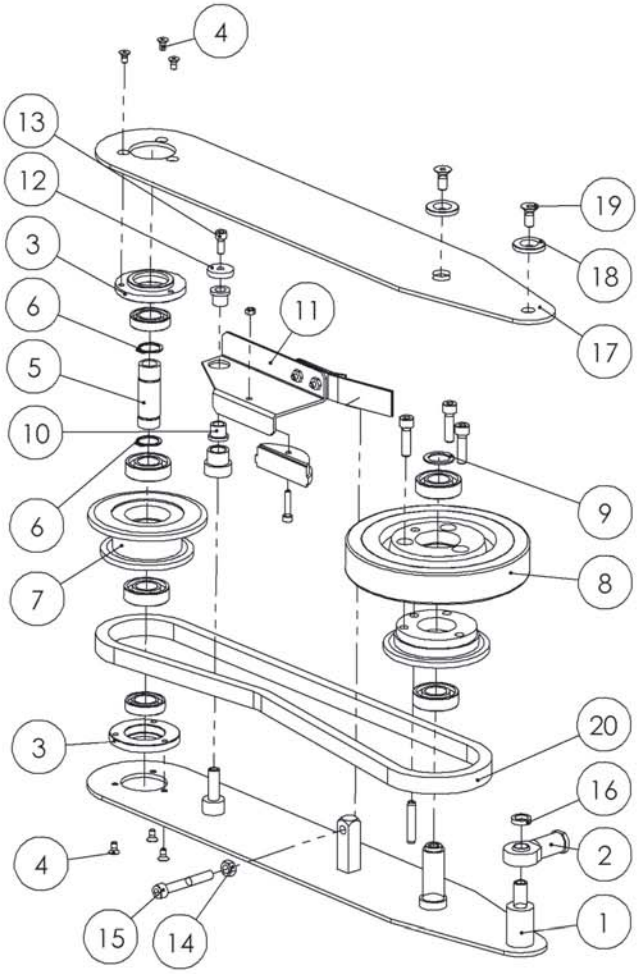

Pos. 11, Fig. 15228/1

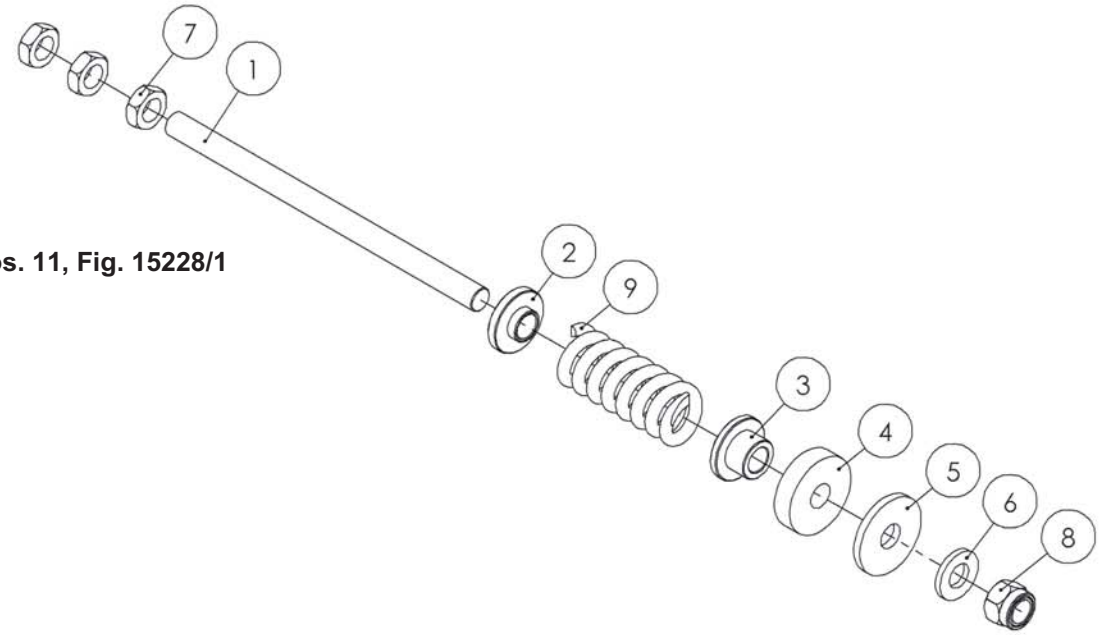

Fig. 15228/3 GRUPPO PIATTAFORMA FAMF1SEMIAUTO F1 FASCIAPALLET

Pos. 11, Fig. 15228

Pos.	Q.tà	Codice	Descrizione
1	1	S440857347A	FLANGIA SUPP. MOTORID.
2	1	S3804177ZZZ	RIDUTTORE MOTOVARIO PRCF042
3	4	S340017293Z	VITE TSVEI M8X30 ZINCATA
4	4	S340012393Z	RONDELLA PIANA X VITE M8 ZINC.
5	4	S340000393Z	DADO M8 ZINCATO
6	1	S332945600A	PIGNONE Z=12 - 3/4" WS15
7	1	S340046292Z	GRANO EIPC M6X10 BR.
8	1	S331681893A	RONDELLA /10 CF2000
9	1	S340054093Z	VITE TSVEI M10X20 ZINCATA

Pos. 2, Fig. 15228/1

Pos.	Q.tà	Codice	Descrizione
1	1	S440940700A	FLANGIA SUPP. MOTORID.
2	1	S3805080ZZZ	RID MOTOVARIO PRCF 03 PAM71B5 RAPP.1
3	4	S340027993Z	VITE TSVEI M8X25 ZINCATA
4	4	S340012393Z	RONDELLA PIANA X VITE M8 ZINC.
5	4	S340000393Z	DADO M8 ZINCATO
6	1	S332981800A	PIGNONE Z=17-1/2"
7	1	S340003692Z	GRANO EIPC M6X10 BRUNITO
8	1	S330221593A	RONDELLA /6,5/30X5
9	1	S340005093Z	VITE TSVEI M6X20 ZINCATA

Pos. 34, Fig. 15228

Pos.	Q.tà	Codice	Descrizione
1	1	S440857347A	FLANGIA SUPP.MOTORID.
2 (*)	1	S380621700A	RID. MOTOVARIO NMRV063 PAM71 B14 i:40
2 (**)	1	SCA0000914	RID. MOTOVARIO NMRV063 PAM71 B14 i:30
3	1	SBC0010739	FLANGIA RIDUTTORE PIATTAF.
4	1	SBC0010738	ALBERO RIDUTTORE PIATTAF.
6	1	S332945600A	PIGNONE Z=12 -3/4" WS15
7	1	S340003692Z	GRANO EIPC M6X10 BRUNITO
8	2	S3210008693A	Rondella /20,2x35x2 zinc.
9	2	S350051593Z	DADO SPEC.AUTOBLOCC.M20X1 ZINC
10	4	S340012293Z	VITE TCEI M8X20 ZINCATA
11	4	S340220592Z	RANELLA DI SAFETY "S" (SCHNORR) /8 F144
12	4	S340012493Z	VITE TSVEI M8X20 ZINCATA
13	3	S3401483ZZZ	CHIAVETTA 7 X 8 X 35 L53-200
14	1	SBC0012531	FLANGIA ADATTAM. LATO MOT.
15	1	SBA0007579	FLANGIA ADATTAM.C-DADI
16	4	SBC0012507	VITE SPECIALE M6x15
17	4	SBC0012508	VITE SPECIALE M6x25
18	4	S340017593Z	RONDELLA PIANA X VITE M6 ZINC.
19	4	S340002193Z	VITE TE M6X12 ZINCATA

Pos. 45, Fig. 15228/1

Pos.	Q.tà	Codice	Descrizione
1	1	S440857347A	FLANGIA SUPP.MOTORID.
2 (*)	1	SCA0001030	RID. NMRV063 PAM71 B14 i15 MOTOVARIO
2 (**)	1	SCA0001423	RID. NMRV063 PAM71 B14 i10 MOTOVARIO
3	1	SBC0010739	FLANGIA RIDUTTORE PIATTAF.
4	1	SBC0012393	ALBERO RIDUTTORE PIATTAF. HSD
6	1	S340003692Z	GRANO EIPC M6X10 BRUNITO
7	2	S3210008693A	Rondella /20,2x35x2 zinc.
8	2	S350051593Z	DADO SPEC.AUTOBLOCC.M20X1 ZINC
9	4	S340012293Z	VITE TCEI M8X20 ZINCATA
10	4	S340220592Z	RANELLA DI SAFETY "S" (SCHNORR) /8 F144
11	4	S340012493Z	VITE TSVEI M8X20 ZINCATA
12	2	S3401483ZZZ	CHIAVETTA 7 X 8 X 35 L53-200
13	1	S3400014ZZZ	LINGUETTA 6X6X35
14	1	S332981800A	PIGNONE Z=17-1/2"
15	1	SBA0007579	FLANGIA ADATTAM.C-DADI
16	4	SBC0012508	VITE SPECIALE M6x25
17	1	SBC0012531	FLANGIA ADATTAM. LATO MOT.
18	4	SBC0012507	VITE SPECIALE M6x15
19	4	S340017593Z	RONDELLA PIANA X VITE M6 ZINC.
20	4	S340002193Z	VITE TE M6X12 ZINCATA

(*) Macchina conforme alle Direttive CEE / Machine conforme aux normes CEE / Machine conforme to CEE rules / Maschine gemaess EEG Richtlinien

(**) Macchina non conforme alle Direttive CEE / Machine pas conforme aux normes CEE / Machine not conforme to CEE rules / Maschine nicht gemaess EEG Richtlinien

Pos. 11, Fig. 15228

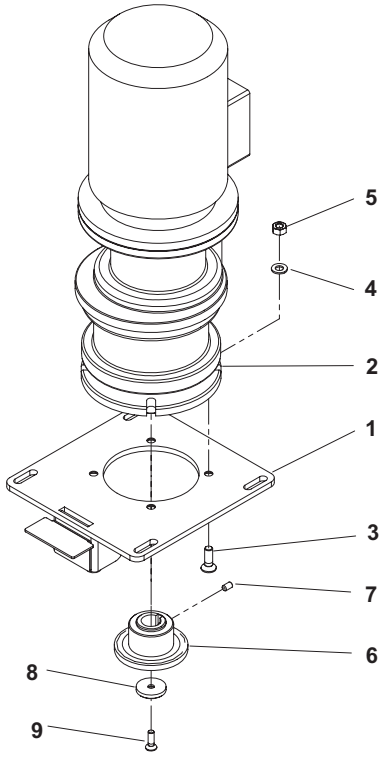

Pos. 2, Fig. 15228/1

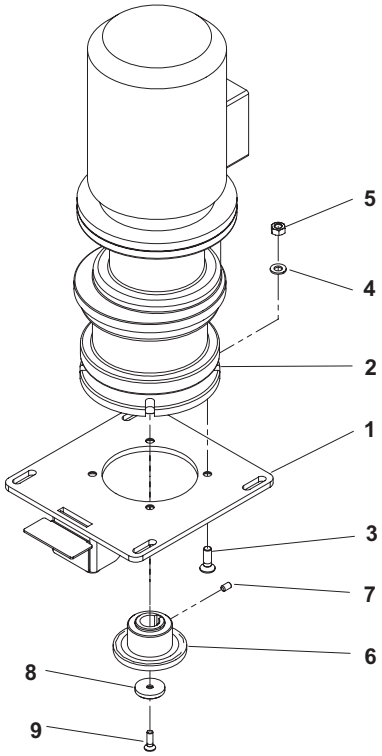

Pos. 34, Fig. 15228

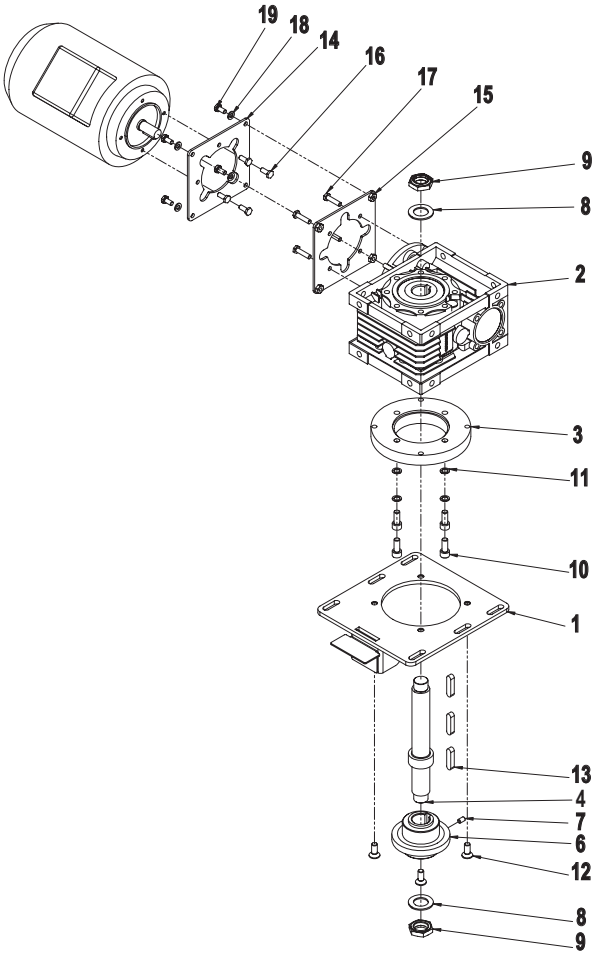

Pos. 45, Fig. 15228/1

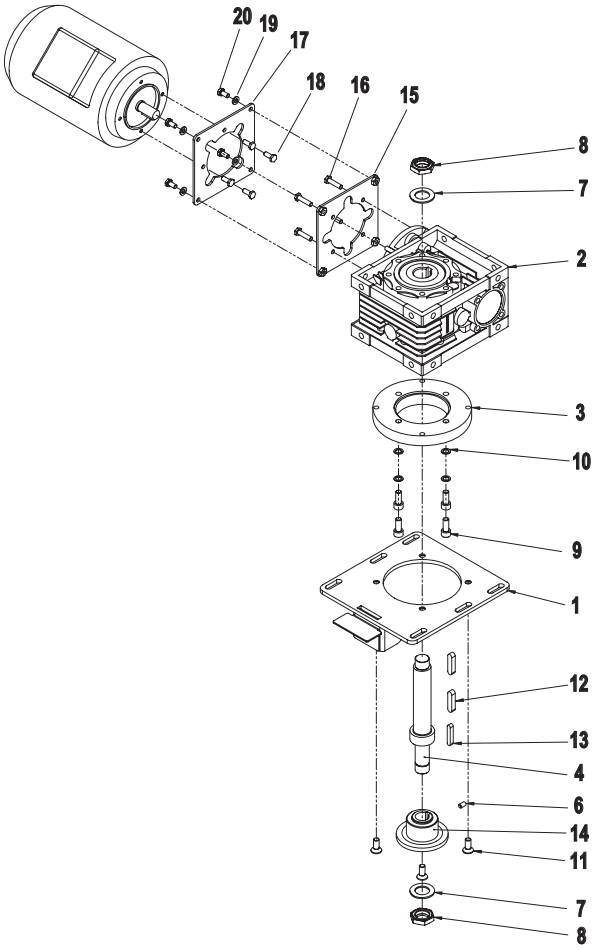

Fig. 15230 GRUPPO PIATTAFORMA TUBOLARE FAMF1SEMIAUTO F1 FASCIAPALLET

Pos.	*Q.tà*	*Codice*	*Descrizione*
1	1	SBA0008635V	BASE TUBOLARE COMP. SW15 F1/PAKLET
1	1	SBA0009356V	BASE TUBOLARE COMP. SW16 F1/PAKLET
2	20	SBA0006535	RUOTE BASE PREM.
2a	1	SBC0010239T	PERNO ROTELLE BASE
2b	2	SBA0004851	RUOTA BASE
2c	2	S330221593A	RONDELLA /6,5/30X5
2d	2	S340049593A	VITE TSVEI M6X15 ZINCATA
3	1	S440852300A	CORONA 3/4 Z55 COMP. WS150
4	1	S3401776ZZZ	CUSCINETTO 6211 2RS
5	1	SBA0005210	PIATTAFORMA ROTANTE COMP. Ø1500
5	1	S440863600A	PIATTAFORMA ROTANTE COMP. WS 165
6	1	S340006293Z	RONDELLA PIANA X VITE M12 ZINC
7	1	S340297593Z	VITE TE M12X180 TUTTO FILETTO AF47
8	2	SBC0006038	CAMMA PIATTAFORMA PAKLET
9	8	S340017593Z	RONDELLA PIANA X VITE M6 ZINC.
10	4	S340001593Z	VITE TCEI M6X25 ZINCATA
11	4	S340023593Z	DADO M6 ZINCATO A BASSA RESIST
12	6	S340078293Z	VITE TSVEI M10X30 ZINCATA
13	4	S340514093A	VITE TRILOBATE M6X12 TESTA TCBCR (TEXTR
14	4	S340012393Z	RONDELLA PIANA X VITE M8 ZINC.
15	4	S340028093Z	VITE TE M8X20 ZINCATA
16	1	SBC0015986V	PANNELLO ISPEZIONE SW15
16	1	SBC0016009	PANNELLO ISPEZIONE SW16
17	1	SBB0000813	PRECABLATO FINECORSA CINGHIA
18 (*)	1	SBA0009204	MOTORIDUTTORE VSF PREMONT.
18 (**)	1	SBA0009931	MOTORIDUTTORE VSF PREMONT.
19	1	S340513200A	CAT RING CHIUSO 3/4" p=196 compr. giunt
19	1	S340513300A	CAT 3/4" SPEZZONE DA p=204 compr. Giunt.
20	1	S310227500A	PATTINO CATENA SX
21	1	S310227400A	PATTINO CATENA DX
22	2	S340513993A	VITE TRILOBATA M5X12 TESTA TCBCR (TEXTR
23	1	S380626400A	MOTORE H71 C4 B14 440 V 50 HZ 0,55 KW
23	1	S380621600A	MOTORE H71 C4 B14 220/240V 380/415V 50HZ 440V 60HZ 3F 0,55 KW
24	1	SBC0012017	CARTER RIDUTTORE VSF BASI SW1
25	4	S340174993Z	VITE TBEI M6x12 ZINCATA
26	1	SBA0007357	STAFFA FISSAGGIO CARTER VSF SW1 C/INS.
27	4	S340017593Z	RONDELLA PIANA PER VITE M6 ZINCATA
28	4	S340016093Z	VITE TCEI M6x20 ZINCATA

(*) Macchina conforme alle Direttive CEE / Machine conforme aux normes CEE / Machine conforme to CEE rules / Maschine gemaess EEG Richtlinien

(**) Macchina non conforme alle Direttive CEE / Machine pas conforme aux normes CEE / Machine not conforme to CEE rules / Maschine nicht gemaess EEG Richtlinien

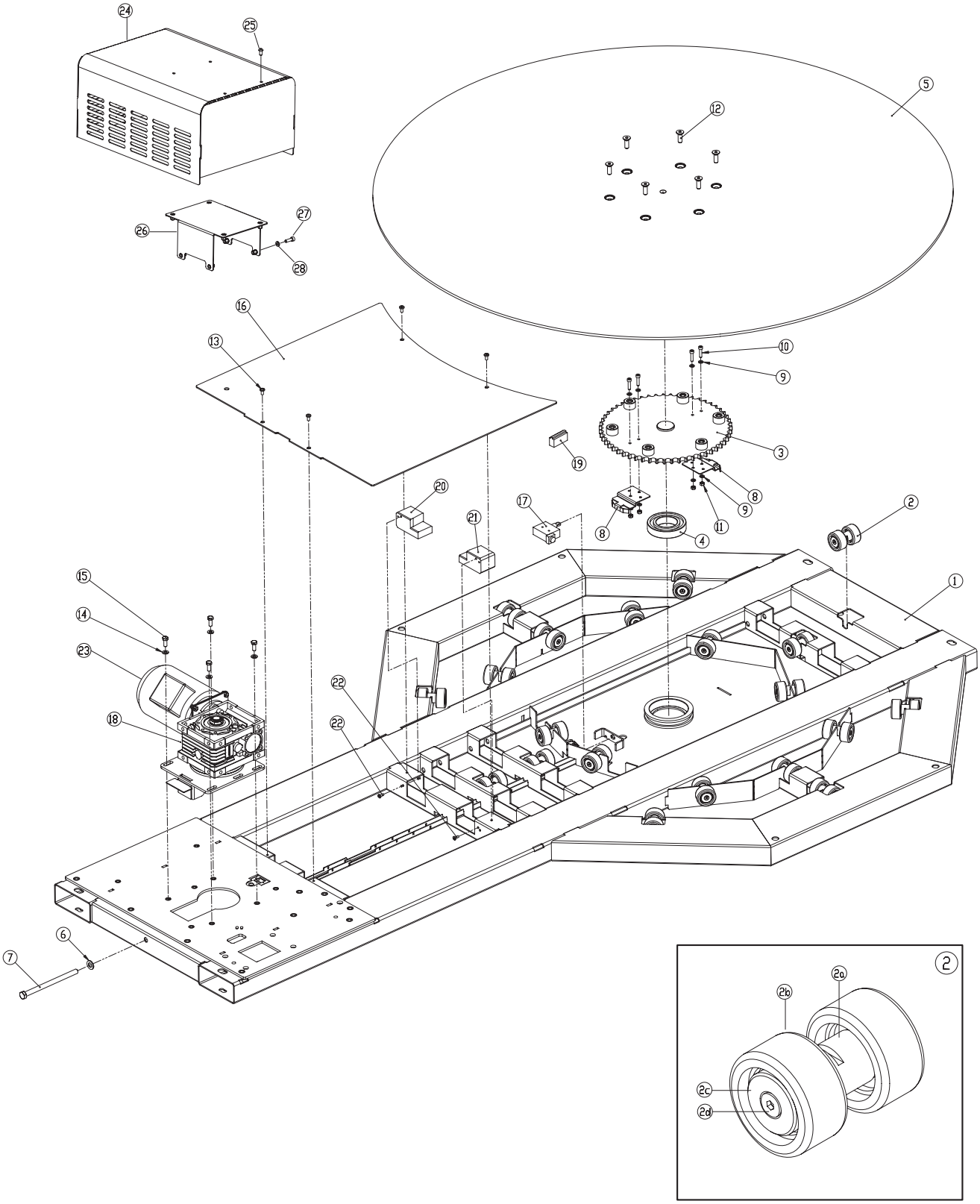
24
25
5
12
27
26
28
16
13
10
9
3
19
20
8
9
17
11
2
21
8
4
15
1
14
23
22
18
22
6
7
2
2a
2b
2c
2d

Fig. 15230 GRUPPO PIATTAFORMA TUBOLARE FAMF1SEMIAUTO F1 FASCIAPALLET

Pos.	*Q.tà*	*Codice*	*Descrizione*
1	1	S440857347A	FLANGIA SUPP.MOTORID.
2 (*)	1	S380621700A	RID. MOTOVARIO NMRV063 PAM71 B14 i:40
2 (**)	1	SCA0000914	RID. MOTOVARIO NMRV063 PAM71 B14 i:30
3	1	SBC0015823	FLANGIA RIDUTTORE VSF
4	1	SBC0010738	ALBERO RIDUTTORE PIATTAF.
5	1	S380621600A	MOT H71 C4 B14 220/240V-380 /415V 50HZ
6	1	S332945600A	PIGNONE Z=12 -3/4" WS15
7	1	S340003692Z	GRANO EIPC M6X10 BRUNITO
8	2	S3210008693A	Rondella /20,2x35x2 zinc.
9	2	S350051593Z	DADO SPEC.AUTOBLOCC.M20X1 ZINC
10	4	S340012293Z	VITE TCEI M8X20 ZINCATA
11	4	S340220592Z	RANELLA DI SAFETY "S" (SCHNORR) /8 F144
12	4	S340012493Z	VITE TSVEI M8X20 ZINCATA
13	3	S3401483ZZZ	CHIAVETTA 7 X 8 X 35 L53-200
14	1	SBC0012531	FLANGIA ADATTAM. LATO MOT.
15	1	SBA0007579	FLANGIA ADATTAM.C-DADI
16	4	SBC0012507	VITE SPECIALE M6x15
17	4	SBC0012508	VITE SPECIALE M6x25
18	4	S340017593Z	RONDELLA PIANA X VITE M6 ZINC.
19	4	S340002193Z	VITE TE M6X12 ZINCATA

(*) Macchina conforme alle Direttive CEE / Machine conforme aux normes CEE / Machine conforme to CEE rules / Maschine gemaess EEG Richtlinien

(**) Macchina non conforme alle Direttive CEE / Machine pas conforme aux normes CEE / Machine not conforme to CEE rules / Maschine nicht gemaess EEG Richtlinien

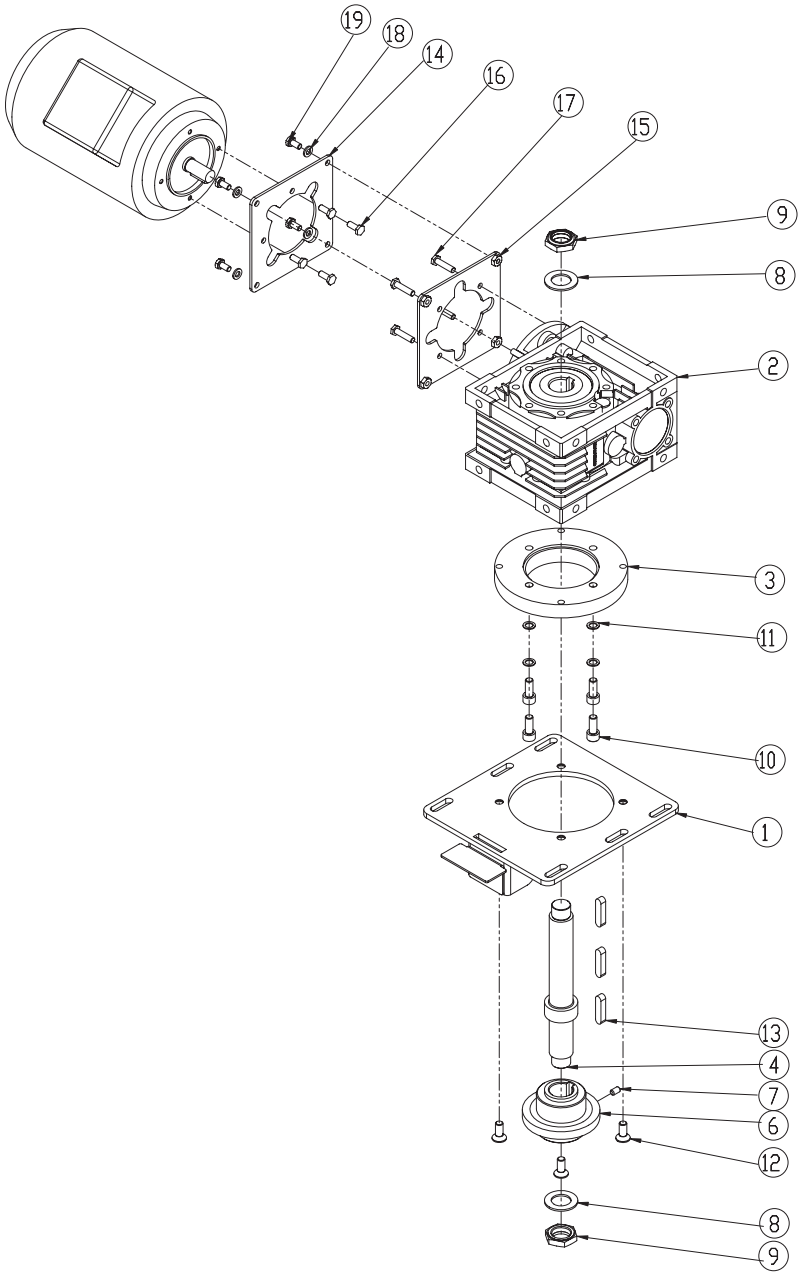
19
18
14
16
17
15
9
8
2
3
11
10
1
13
4
7
6
12
8
9

SIAT S.p.A. - Via Puecher, 22 - 22078 TURATE (CO) ITALY - P.O. BOX 1
Tel. 02-964951 - Telefax 02-9689727
http://www.siat.com - E-Mail: siat@siat.com

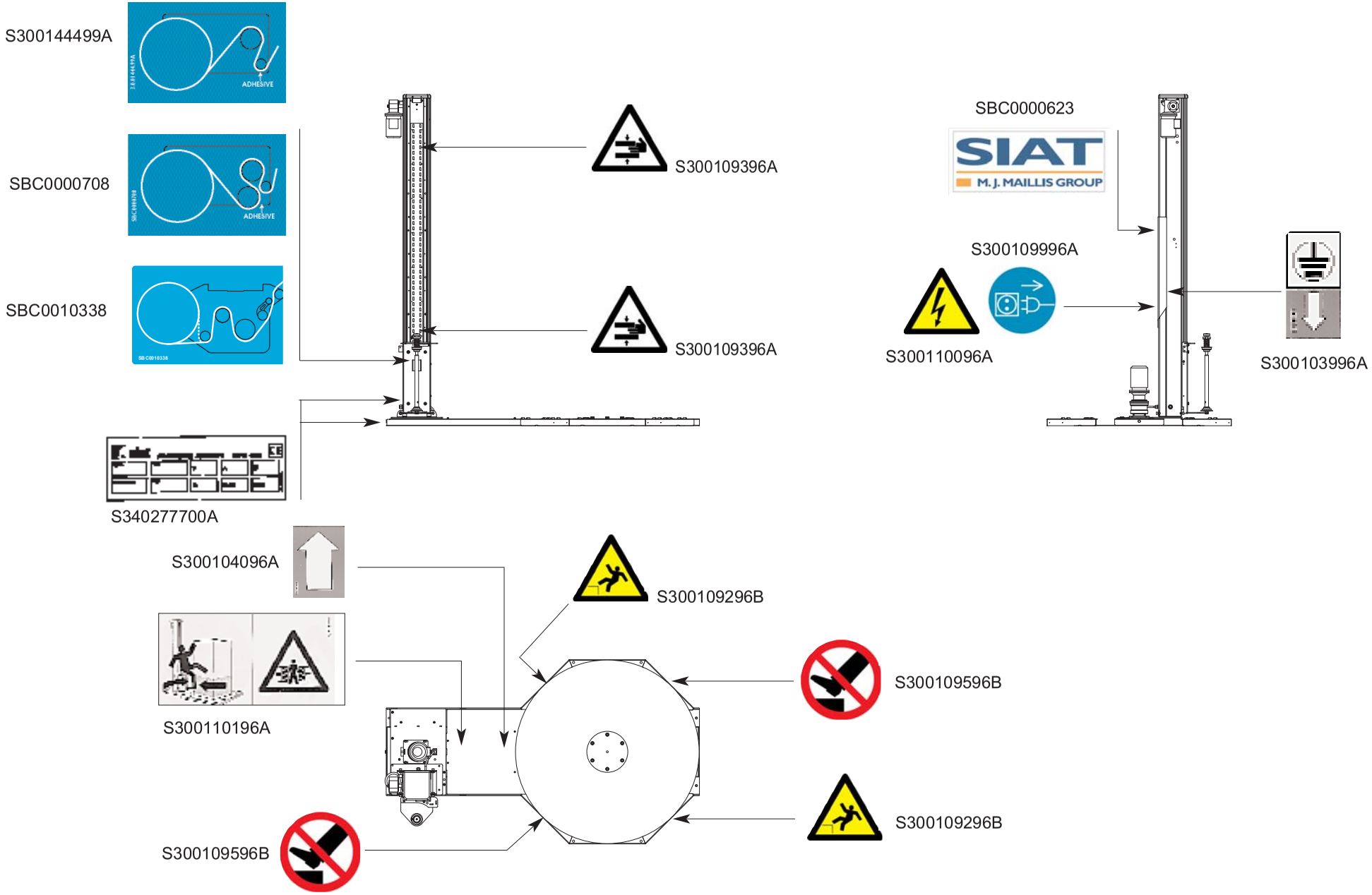

F1- LABELS - ETIQUETTES - ETIQUETAS- ETIKETTEN - ETICHETTE

Fig. **15030**

SIAT
M. J. MAILLIS GROUP

Declaration of Conformity

Déclaration de conformità
Declaración de conformidad
Konformitätserklärung
Dichiarazione di conformità
Conformiteitsverklaring
Försäkran om överensstämmelse
Declaração de conformidade

CE

The undersigned / le fabricant / el que subscribe / der Unterzeichnete / la sottoscritta / Ondergetekende / Untertecknad / os que se subscrevem:

SIAT SpA – Società Internazionale Applicazioni Tecniche
Via Giancarlo Puecher, 22 - 22078 Turate (CO) – ITALY

hereby certifies that, when leaving our factory, the product indicated below is in accordance with the EEC guidelines, EEC standards of safety and product-specific EEC standards.

declare que la machine designée ci-dessous est conforme aux dispositions de la directive "machines midifiée et aux legislations nationales la transposant.

declara bajo su propia responsabilidad que la presente mercancia, objeto de la presente dclaración, cumple con todas las exigencias de las normas de la Comunidad Europea, en lo que a normas técnicas, de homologación y de seguridad se refiere.

bestätigt, daß das nachfolgend bezeichnete Gerät in der von uns in Verkehr gebrachten Ausführung die Anforderungen EG-Richtlinien, EGSicherheitsstandards und produktspezifischen EG-Standards erfüllt.

certifica che il prodotto qui sotto indicato, nel modello da noi commercializzato, è conforme alle direttive CE nonchè agli standard di sicurezza e agli standard relativi ai singoli prodotti.

bevestigt, dat het volgende genoemde apparaat in de door ons in de handel gebrachte uitvoering voldoen aan de eis van, en in overeenstemming zijn met de EG-richtlijnen, de EG-veiligheids-standaard en de voor het produkt specifieke EG-standaard.

försäkrar härmed att nedan nämnda produkter överensstämmer med EEC: s riktlinjer, ECC:s säkerhetsstandard och EEC:s produktspecifikation.

por este meio certifacam que ao sairem da fábrica, o aparelho abaixo mencionado cumprem tanto ne execução com as exigências das directrizes harmonizadas da CEE, com os parâmetros de segurança standard da CEE e, com os parâmetros especificos de produçao por nós.

Description of the product
Description du produit
Descripción de la mercancia
Bezeichnung der Gerät
Descrizione del prodotto
Omschrijving van het apparaat/de apparaten
Produkt
Descrição do aparelho

SEMI-AUTOMATIC PALLET STRETCHWRAPPER

Fasciapallet semiautomatico

Model:
Modèle:
Modelo:
Modell:
Modello:
Model:
Modell:
Modelo:

F1

Serial Number:
Numéro de matricule:
Número de matrícula:
Matrikel Nummer:
Numero di matricola:
Serie nummer:
Serie nummer:
Numero de matrícula:

F1SEMIAUTO.....

EEC guidelines:
directives europeennes:
normas CE:
EG-Richtlinien:
direttive CE:
EG-richtlijnen:
directrizes da CEE:

2006/42/CE
2004/108/CE

Name and address of the person authorized to compile the technical file referred to in Annex VII A of Directive 2006/42/EC
Nom et adresse de la personne autorisée à constituer le dossier technique visé à l'annexe VII A de la directive 2006/42/CE
Nombre y dirección de la persona facultada para elaborar el expediente técnico contemplado en el anexo VII A de la Directiva 2006/42/CE
Name und Anschrift der Person, die bevollmächtigt, die technischen Unterlagen gemäß Anhang VII A der Richtlinie 2006/42/EG zu kompilieren
Nome e indirizzo della persona autorizzata a costituire il Fascicolo Tecnico di cui all'allegato VII A della Direttiva 2006/42/CE
Naam en adres van de persoon die gemachtigd is het technisch dossier als bedoeld in bijlage VII A van Richtlijn 2006/42/EG samen te stellen
Nome e endereço da pessoa autorizada a compilar o processo técnico referido no anexo VII A da Directiva 2006/42/CE

SIAT SpA – Società Internazionale Applicazioni Tecniche Via Giancarlo Puecher, 22 - 22078 Turate (CO) – ITALY

Turate, 05/12//2012

Stefano Mele
Managing Director