SIAT

M. J. MAILLIS GROUP

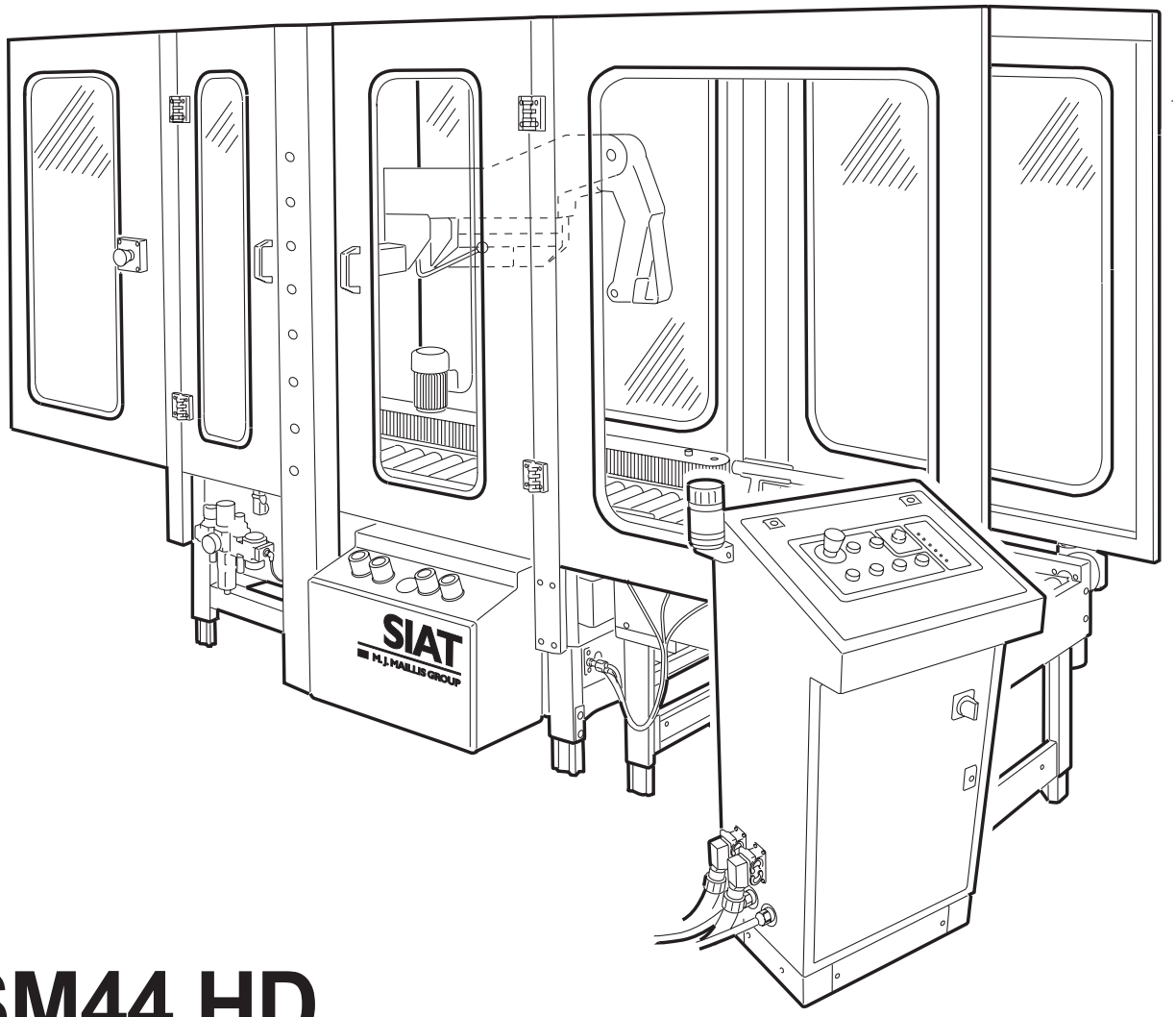

SM44 HD

NASTRATRICE AUTOMATICA
AUTOMATIC CASE SEALING MACHINE
MACHINE ENRUBANNEUSE AUTOMATIQUE
AUTOMATISCHE KARTONVERSCHLIESSMASCHINE
PRECINTADORA AUTOMATICA

MANUALE DI ISTRUZIONI E PARTI DI RICAMBIO
INSTRUCTIONS MANUAL AND SPARE PARTS LIST
MANUAL D'INSTRUCTIONS ET PIECES DETACHEES
BEDIENUNGSANLEITUNG UND ERSTAZTEILLISTE
MANUAL DE INSTRUCCIONES Y RECAMBIOS

CE

Cod. pubbl.: SMB00055K

SIAT S.p.A. - Via Puecher, 22 - 22078 TURATE (CO) ITALY - P.O. BOX 1
Tel. 02-964951 - Telefax 02-9689727
http://www.siat.com - E-Mail: siat@siat.com

Instruction manual for the use, maintenance, safety, shipment, storage, unpacking, set-up, repairing, trouble shooting, spare parts and disposal concerning the case sealing machine model SM44 HD.

This publication is property of SIAT S.P.A.
Via Puecher, 22 - 22078 TURATE (CO) - ITALY
Tel. 02-964951 - Fax. 02-9689727

Edition: October 2013

The reproduction of this manual is strictly forbidden.
All rights reserved ©Siat S.p.A. 2013

The manufacturer reserves the right to modify the product at any time without notice.

Publication n. SMB00055K
Release 0

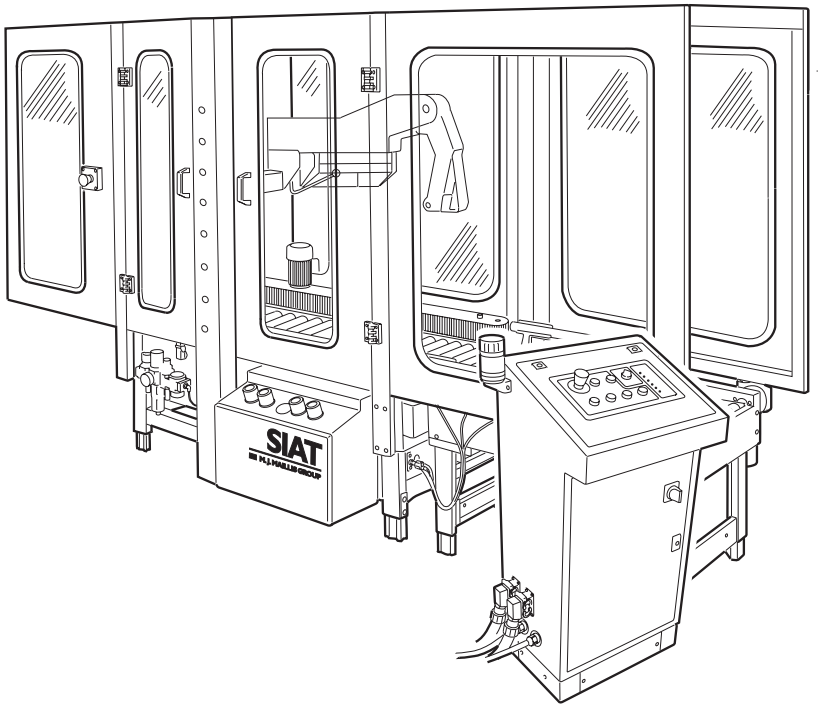

SM44 HD

AUTOMATIC CASE SEALING MACHINE WITH DRIVE SIDE BELTS

- Maximum box size: **h.** 500 mm x **w.** 500 mm x **l** 600 mm
- Minimum box size: **h.** 140 mm x **w.** 160 mm x **l** 200 mm
- Adhesive tape: **w.** 50/70 mm
- Belt speed: 30 m/min.
- Production: 8-10 boxes/min
- Average air consumption: 180 Nl/min approximately

INDEX

	Section
Manufacturing specifications	1.1
Manual, how to use the	1.2
Safety	3
Serial Number	2.1
After-sale service	2.2
Warranty	2.3
Operators' skill levels	3.6
Technical specifications	4.2
Dimensions	4.6
Transportation	5
Unpacking	6
Installation	7
Controls	8
Theory of operation	9
Safety devices	10
Set-up and adjustments	11
Operation	12
Tape replacement	12.3
Cleaning	12.4
Trouble shooting	12.7
Maintenance	13
Lubrication	13.5
Blade replacement	13.9
Belt replacement	13.10
Adjustment of belt tension	13.11
Additional Instructions	14
Enclosures	15
Schematics	16
Spare parts	last section

ABBREVIATIONS AND ACRONYMS

LIST OF ABBREVIATIONS, ACRONYMS AND UNUSUAL TERMS TO BE FOUND IN THIS MANUAL

Dwg.	=	drawing
Encl.	=	enclosure
Ex.	=	example
Fig.	=	figure showing spare parts
Max.	=	maximum
Min.	=	minimum
Mod.	=	machine model
N.	=	number
N/A	=	not applicable
OFF	=	machine stopped
ON	=	machine running
OPP	=	oriented polypropylene adhesive tape
Pict.	=	picture
PLC	=	Programmable Logic Control
PP	=	polypropylene
PTFE	=	Polytetrafluorethylene
PVC	=	Polyvinylchloride
Ref.	=	reference mark
SIAT SPA	=	Società Internazionale Applicazioni Tecniche (Società per Azioni)
Tav.	=	Illustration

w	=	width
h	=	height
l	=	length
ol	=	overall length
cbh	=	conveyor bed height

1-INTRODUCTION

1.1 MANUFACTURING SPECIFICATIONS

The automatic case sealing machine Mod. SM44 HD has been designed and manufactured compling with the legal requirements in force at the date of its manufacture.

THE REFERENCE DOCUMENTS ARE:

Machines guidelines 2006/42/CE
Standards applied
UNI EN 415-7
EN 415-9:2009

Guidelines EMC 2004/108/CE
Standards applied
CEI EN 60204-1:2006
EN 61000-6-2:2005
EN 61000-6-4:2007

1.2 HOW TO READ AND USE THE INSTRUCTION MANUAL

1.2.1 IMPORTANCE OF THE MANUAL

The manual is an important part of the machine; all information contained herein is intended to enable the equipment to be maintained in perfect condition and operated safely. Ensure that the manual is available to all operators of this equipment and is kept up to date with all subsequent amendments. Should the equipment be sold or disposed of, please ensure that the manual is passed on. Electrical and pneumatic diagrams are included in the manual. Equipment using PLC controls and/or electronic components will include relevant schematics or programmes in the enclosure, and in addition the relevant documentation will be delivered separately.

1.2.2 MANUAL MAINTENANCE

Keep the manual in a clean and dry place near the machine. Do not remove, tear or rewrite parts of the manual for any reason.
Use the manual without damaging it.
In case the manual has been lost or damaged, ask your after sale service for a new copy, quoting the code number of the document.

1.2.3 CONSULTING THE MANUAL

The manual is composed of:
- pages which identify the document and the machine;
- index of the subjects:
- instructions and notes on the machine: sections **2÷14**
- enclosures, drawings and diagrams:
  sections **15÷16**
- spare parts: last section.

All pages and diagrams are numbered. The spare parts lists are identified by the figure identification number.
All the notes on safety measures or possible dangers are identified by the symbol: ⚠

All the important warning notes related to the operation of the machine are identified by the symbol: ☞
The parts typed in **bold** refer to technical data or technical notes on a specific subject.

1.2.4 HOW TO UPDATE THE MANUAL IN CASE OF MODIFICATIONS TO THE MACHINE

Modifications to the machine are subject to manufacturer's internal procedures.
The user receives a complete and up-to-date copy of the manual together with the machine.
Afterwards the user may receive pages or parts of the manual which contain amendments or improvements made after its first publication.
The user must use them update this manual.

2-GENERAL INFORMATION

2.1 SERIAL NUMBER OF THE MACHINE AND NAME OF THE MANUFACTURER

SIAT
M. J. MAILLIS GROUP

SIATs.p.a.Via G.Puecher N°22
Turate (CO) ITALY

CE

Model	Part Number	Year	Ampere	Watt

Type	Serial Number	Volt	Hertz	Phase

2.2 FOR AFTER-SALE SERVICE AND SPARE PARTS PLEASE APPLY TO:

SIAT
M. J. MAILLIS GROUP

Via Puecher, 22
22078 TURATE (CO) - ITALY

Tel. 02-964951
Fax. 02-9682239
E-mail siat@siat.com

AGENT/DISTRIBUTOR OR LOCAL
AFTER SALE SERVICE:

WARRANTY

Within the limits of what is set forth below, Seller agrees to repair or replace without cost to Buyer any defective goods when such defect occurs within a period of twelve (12) months from the date in which Seller's goods have been put into use, but in no event beyond thirteen (13) months from the date of shipment.

Expressly excluded from this warranty are those parts subject to normal wear and tear (by way of illustration, but not limitation, such parts as belts, rubber rollers, gaskets, brushes, etc.) and electrical parts.

Buyer must immediately notify Seller of any defect, specifying the serial number of the machine.

Buyer shall send to Seller the defective item for repair or replacement. Seller will perform the repairs or provide a replacement within a reasonable period of time.

Upon effecting such repair or replacement, Seller shall have fulfilled its warranty obligations. In the event the repairs or replacement must be effected at the place where the machine is installed, all expenses for labor, travel and lodging of Seller's personnel shall be sustained by the Buyer. Buyer will be invoiced in conformity with Seller's standard charges for the services rendered.

Seller is not responsible for defects resulting from:

- Improper use of the machine
- Lack of proper maintenance
- Tampering with the machine or repairs effected by the Buyer.

Seller will not be liable for any injury to persons or things or for the failure of production. With respect to the materials not manufactured by Seller, such as motors and electrical equipment, Seller will grant to Buyer the same warranty Seller receives from its supplier of such materials. Seller does not warrant the compliance of its machines with the laws of non-EEC countries in which the machines may be installed, nor does it warrant compliance with laws or standards relating to the prevention of accidents or pollution.

Adaptation of Seller's machines to the aforesaid laws or standards shall be the responsibility of Buyer who assumes all liability therefore.

Buyer shall indemnify and hold Seller harmless against any claim by third parties resulting from failure to comply with the aforesaid laws and standards.

SIAT S.p.A.
Via Puecher, 22 - 22078 TURATE (CO) ITALY - Tel. 02964951 - Fax 029689727 - http://www.siat.com - Email: siat@siat.com

3-SAFETY

3.1 GENERAL SAFETY INFORMATION

Read all the instructions carefully before starting the work with the machine; please pay particular attention to sections marked by the symbol

The machine is provided with a complete safety protection and with a two LOCKABLE EMERGENCY STOP BUTTON placed on the same protection and on the control panel; when one button is pressed, it stops the machine at any point in the working cycle.

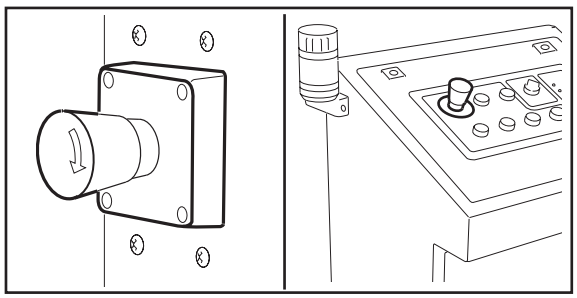

Disconnect the machine from the mains before any maintenance operation

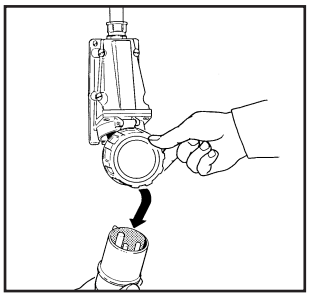

Keep this manual in a handy place near the machine: its information will help you to maintain the machine in good and safe working condition.

3.2 DEFINITION OF THE OPERATORS' QUALIFICATIONS

- Machine operator
- Maintenance technician
- Electrician
- Manufacturer’s technician

Only persons who have the skills described in the following page should be allowed to work on the machine. It is the responsibility of the user to appoint the operators having the appropriate skill level and the appropriate training for each category of job.

SKILL 1

MACHINE OPERATOR
This operator is trained to use the machine with the machine controls, to feed cases into the machine, make adjustments for different case sizes, to change the tape and to start, stop and restart production.
N.B.: the factory manager must ensure that the operator has been properly trained on all the machine functions before starting work.

SKILL 2

MECHANICAL MAINTENANCE TECHNICIAN
This operator is trained to use the machine as the MACHINE OPERATOR and in addition is able to work with the safety protection disconnected, to check and adjust mechanical parts, to carry out maintenance operations and repair the machine.
He is not allowed to work on live electrical components.

SKILL 2a

ELECTRICAL MAINTENANCE TECHNICIAN
This operator is trained to use the machine as the MACHINE OPERATOR and in addition is able to work with the safety protection disconnected, to make adjustments, to carry out maintenance operations and repair the electrical components of the machine.
He is allowed to work on live electrical panels, connector blocks, control equipment etc.

SKILL 3

SPECIALIST FROM THE MANUFACTURER
Skilled operator sent by the manufacturer or its agent to perform complex repairs or modifications, when agreed with the customer.

3.3 INSTRUCTIONS FOR A SAFE USE OF THE MACHINE

Only persons who have the skills described on the following paragraph **3.6** are allowed to work on the machine.
It is responsibility of the user to appoint the operators having the appropriate skill level and the appropriate training for each category of job.

3.4 STATE OF THE MACHINE

List of the modes which are possible with this machine:
- automatic running;
- running with safety protections removed or disabled;
- stopped by using the main switch;
- stopped by using the lockable emergency stop button;
- electric power disconnected;
- compressed air disconnected.

3.5 NUMBER OF THE OPERATORS

The operations described hereinafter have been analized by the manufacturer; the number of operators shown for each operation is suitable to perform it in the best way.
A smaller or larger number of operators could be unsafe.

3.6 OPERATORS' SKILL LEVELS

The table below shows the minimum operator's skill for each operation with the machine.

OPERATION	MACHINE MODE	OPERATOR'S SKILL	NUMBER OF OPERATORS
Installation and set up of teh machine	Running with safety priotections disabled.	**2 e 2a**	2
Tape replacement	Stopped by pressing the EMERGENCY STOP button.	**1**	1
Replacement of blades	Electric power disconnected.	**2**	1
Replacement of drive belts	Electric power disconnected.	**2**	1
Ordinary maintenance	Electric power disconnected.	**2**	1
Extraordinary maintenance (mechanical)	Running with safety protections disabled.	**3**	1
Extraordinary maintenance (electrical)	Running with safety protections disabled.	**2a**	1
Extraordinary maintenance (pneumatic)	Stopped by pressing the EMERGENCY STOP button.	**3**	1

3.7 RESIDUAL HAZARDS

The case sealer SM44 HD has been designed following the EC directives, and incorporates various safety protections which should never be removed or disabled.
Notwithstanding the safety precautions conceived by the designers of the machine, it is essential that the operator and service personnel be warned that the following uneliminable residual hazards exis

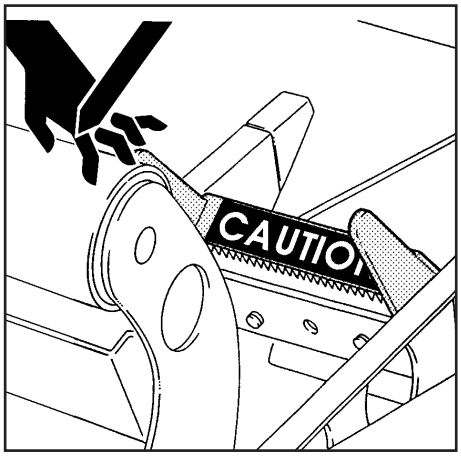

WARNING! Tape cutting blades.
Never remove the safety device which covers the blade on the top and bottom taping units.
Blades are extremely sharp. Any error may cause serious injuries.:

WARNING!: Side flaps fold device guard knobs
Don't remove the orange plastic guard knobs on the side flaps fold device ends.

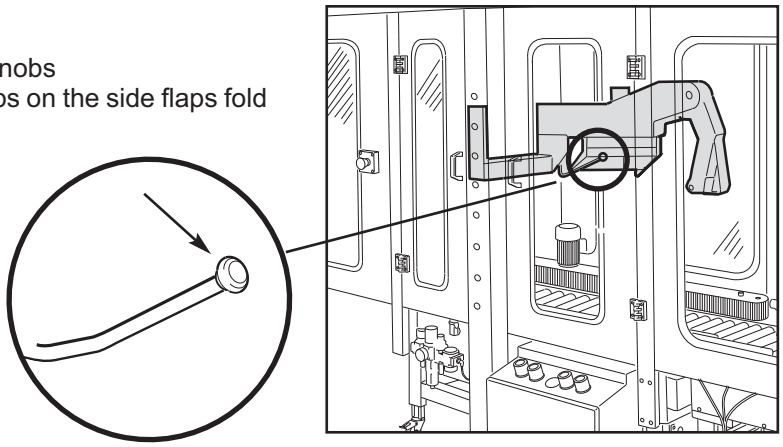

WARNING!: Brake cylinders top taping head frame

The top taping head frame can fall in case of emergency stop (activated by pressing the stop emergency button or opening the safety guarding) for missing maintenance of the braking systems on the pistons.

The braking systems must be inspected every two weeks of operation of the machine (pls see section 13 Maintenance) or in case of alarm signal on the control panel (paragraph 8.1)

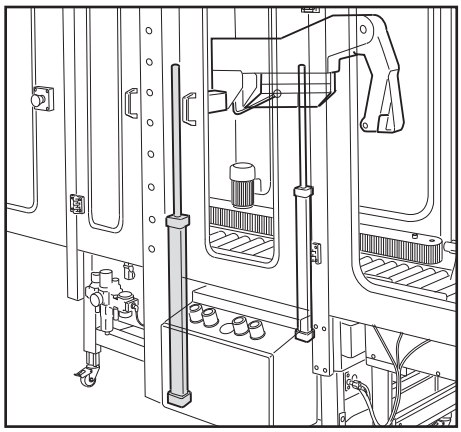

3.8 RECOMMENDATIONS AND MEASURES TO PREVENT OTHER HAZARDS WHICH CANNOT BE ELIMINATED

The operator must stay on the working position shown on paragraph 12.1. He must never touch the running driving belts or put his hands inside any cavity.
The box must be fed by keeping the hands in the right position.
The operator must pay attention to the blades during the tape replacement.

3.9 PERSONAL SAFETY MEASURES

(Safety glasses, safety gloves, safety helmet, safety shoes, air filters, ear muffs).
None is required, except when recommended by the user.

3.10 PREDICTABLE ACTIONS WHICH ARE INCORRECT AND NOT ALLOWED

- Never try to stop or hold the box while it is being driven by the belts.
  Use only the EMERGENCY STOP BUTTON.
- Never work without the safety protections.
- Never remove or disable the safety devices.
- Only authorised personnel should be allowed to carry out the adjustments, repairs or maintenance which require operation with reduced safety protections. During such operations, access to the machine must be restricted. When the work is finished, the safety protections must immediately be reactivated.

- The cleaning and maintenance operations must be performed after disconnecting the electric power.
- Clean the machine using only dry clothes or light detergents. Do not use solvents, petrols etc.
- Do not modify the machine or any part of it. The manufacturer will not be responsible for any modifications.
- We advise to apply directly to Siat for modifications.
- Follow carefully the installation instructions of this manual.
  The manufacturer will notbe responsible for damages caused by improper installation.

3.11 TABLE OF WARNINGS, LABELS, PLATES AND DRAWINGS TO BE FOUND ON THE MACHINE

	SYMBOLS	COLOURS
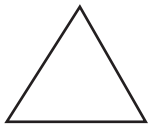	DANGER AND PARTS IN MOVEMENT	YELLOW COLOUR
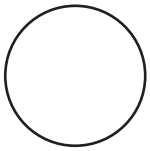	COMPULSORY ACTIONS/PROHIBITION	RED COLOUR
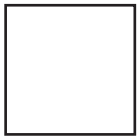	CONTROLS AND INFORMATION	LIGHT BLUE COLOUR

a 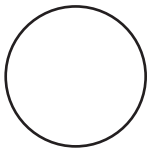

Before starting any maintenance operations the electrical power must be disconnected.

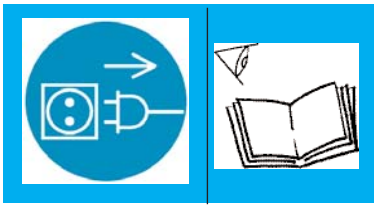

Label code: 3.0.01097.96A

b 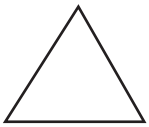

Show the sharp knife on the taping head.

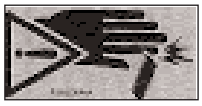

Label code: 3.0.01028.96A

c 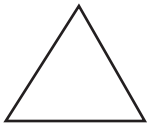

Tape threading path for bottom taping unit and position of the sharp knife.

Label code: 3.0.01024.96A

d

Shows the running direction of the belts.

Label code: 3.0.01040.96A

e

Show the earth wire connection point on the machine frame.

Label code: 3.0.01039.96A

f

Caution!: High voltage

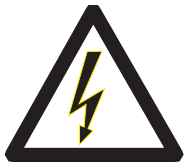

Label code: 3.0.01100.96A

g

Tape threading path for upper taping unit.

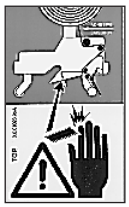

Label code: 3.0.01023.96A

h

Compulsory position to lift the machine with forktrucks or other suitable raising equipment.

Label code: SBC0010337

i

Identification data for the machine model, serial number and manufacturer.

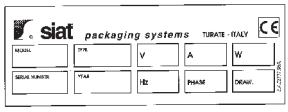

Label code:S340277700A

4.1 GENERAL DESCRIPTION OF THE SM44 HD

The SM44 PLC case sealer with side drive belts is designed to seal boxes by applying two tape stripes on their top and bottom flaps simultaneously. No operator is required.
The machine adjusts itself automatically to the case size and folds the 4 upper flaps. The introduction of the cases into the machine is performed by the indexing system AS24. All the operations are managed by a PLC located into the controls board.

4.2 TECHNICAL SPECIFICATIONS

-Production = 600 boxes/hour (average)
-Standard power supply = 400 V 50Hz 3Ph
-Installed power: 0.620 kW
-Taping units K11 or K12, tape width 50/75 mm.
-SM44 HD+control board+AS24 weigth= 430+70+90 kg.
-Compressed air: 6 BAR; feeding tube diameter 10 mm.
-Belts speed = 27 m/min
-Infeed conveyor speed: 21m/min

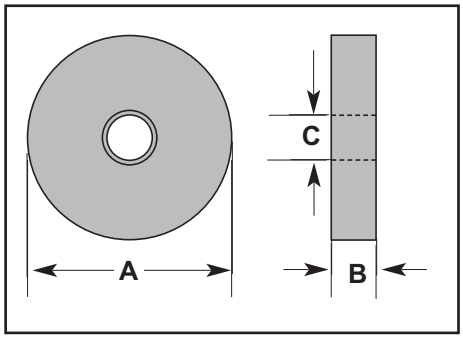

A = 410 mm max
B = 50/75 mm
C = 76 mm

TAPE DIMENSIONS
Suitable adhesive tapes:
PVC
OPP
ADHESIVE PAPER

4.3 PURPOSE OF THE MACHINE

The purpose of this machine is the sealing with adhesive tape of boxes having the dimensions (in millimeters) shown in the table below:

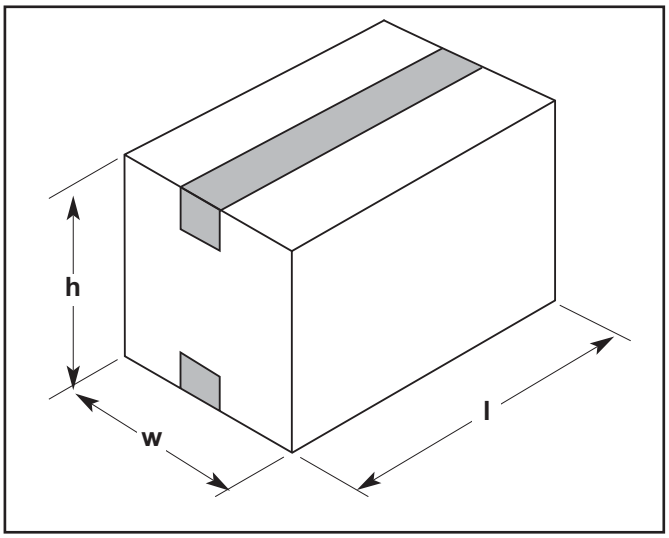

CASE DIEMSNIONS

SM44 HD	w	h	l
min.	160	140	200
max.	500	500	600

CASE WEIGHTS
min.: 2 kg
max.: 30 kg

Warning: The machine supplied with the standard electric system is not designed for use in atmosphere with risk of deflagration. In such conditions the machine must be equipped with anti-deflagration components and/or air motors.

4.4 MAIN COMPONENTS

The machine is composed of:

n. 1 frame
n. 4 adjustable legs
n. 2 columns
n. 2 taping units
n. 1 top head
n. 2 side drive belts
n. 2 electric motors
n. 1 safety guard
n. 2 emergency stop button
n. 1 controls board

The infeed conveyor is composed of:

n. 1 frame
n. 4 adjustable legs
n. 1 electric motor
n. 1 motorized belt

For the technical features of the electric parts refer to section 15-ENCLOSURES

4.5 OPERATIVE FLOW

The cases, coming from the filling stations, are centred, gated and fed to the machine by the infeed conveyor AS24.
By a PLC and sensors, the SM44 HD adjusts itself to the case size.
The side belts drive the case during the upper flaps folding and the sealing operations.
At the end, the machine return in rest position, ready to receive the next case.

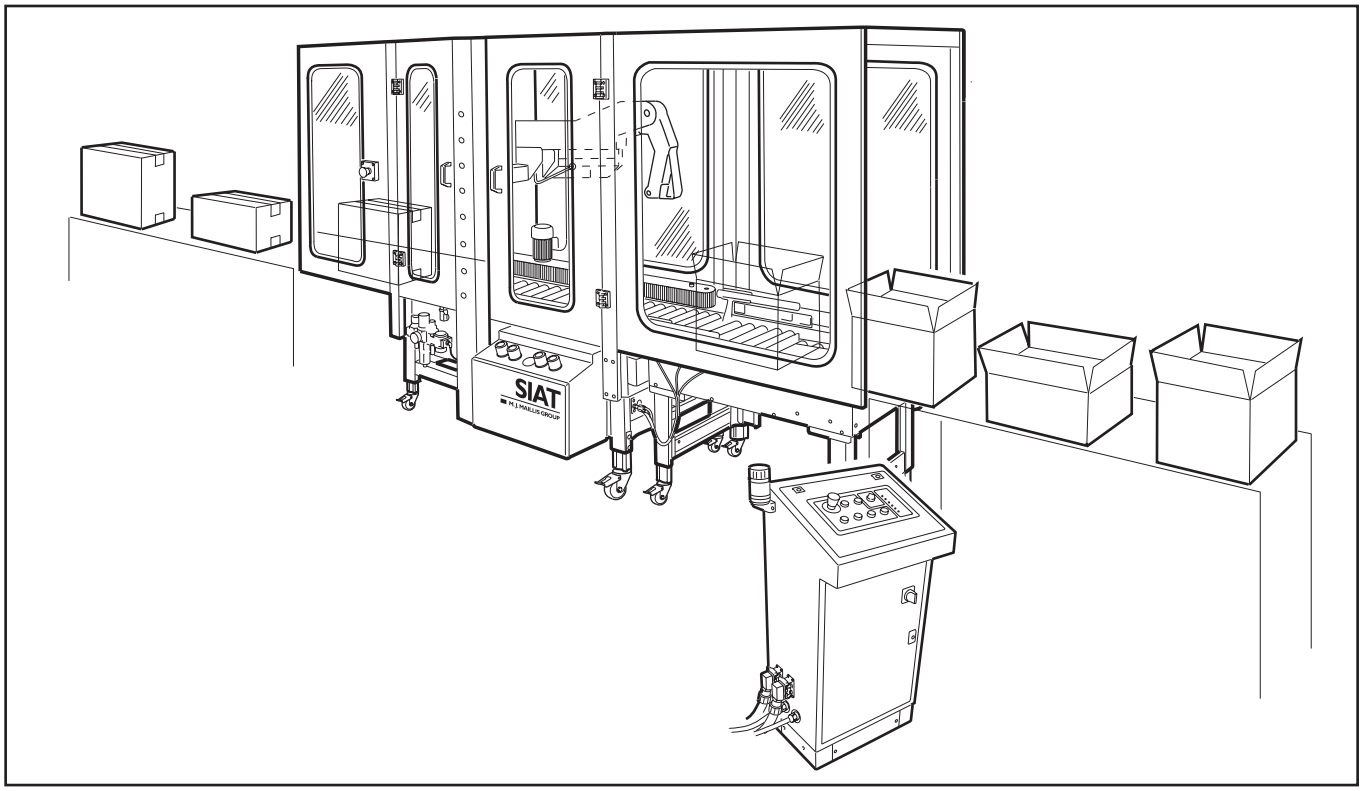

4.6 MACHINE NOISE MEASUREMENT

Acoustic pressure at 1 meter distance from the machine with the tape roll inserted: 73 dB. Acoustic pressure at a height of 1,6 meter above the machine with the tape roll inserted: 73 dB.
The measurement has been performed by a SPYRI-MICROPHON phonometer.

4.7 OVERALL DIMENSIONS

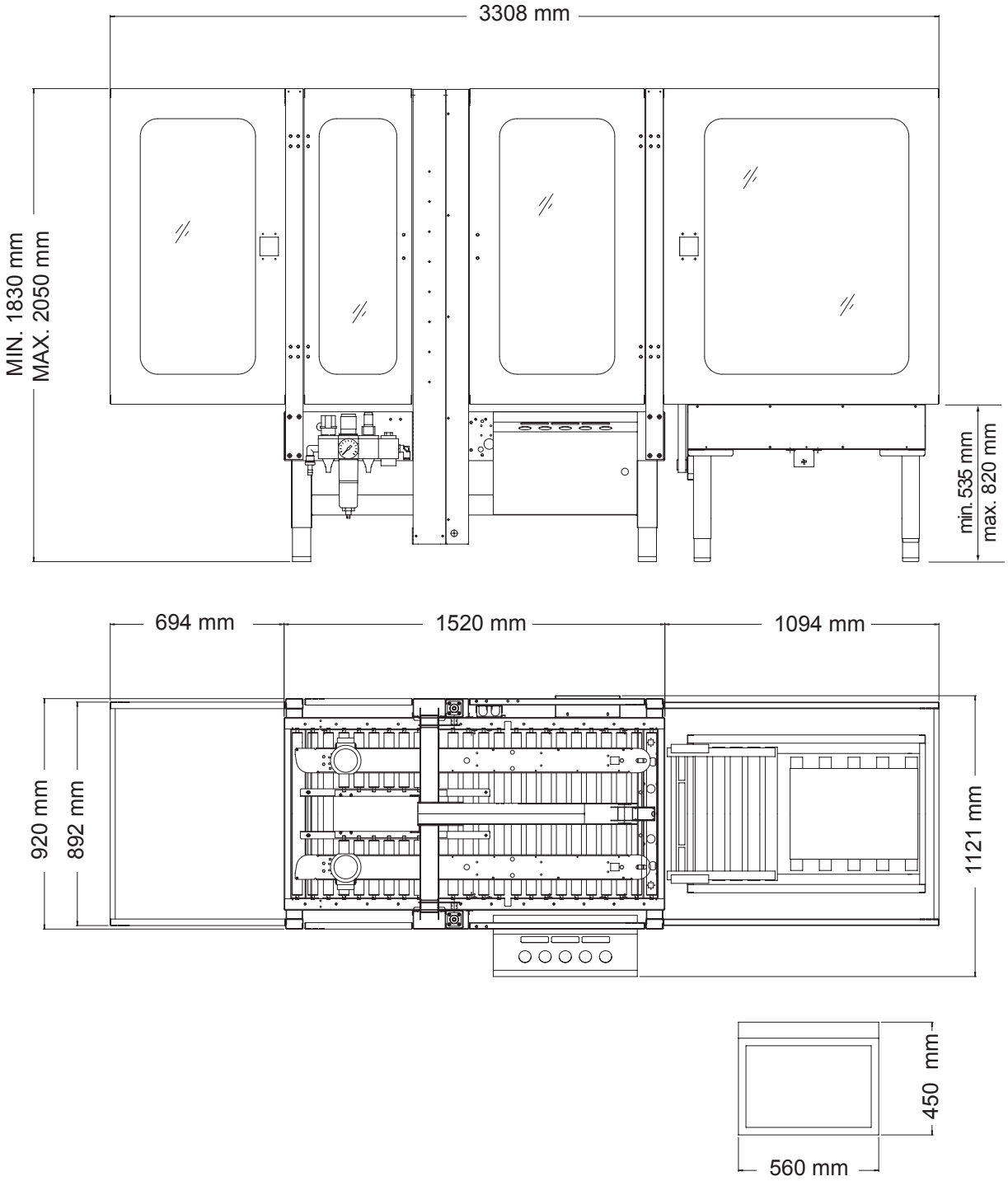

5-SHIPMENT - HANDLING - STORAGE

5.1 MACHINE TRANSPORTATION AND HANDLING

The machine and the infeed conveyor are shipped in 2 separate packings, fixed on a wooden pallet. They can be uplift with a normal fork lift. The standard packing is suitable for surface and air transportation. Oversea packing on request.

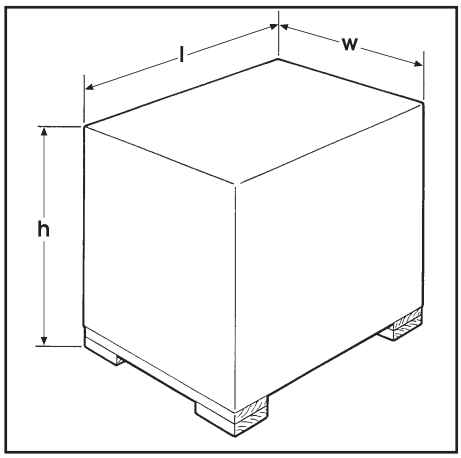

Packing dimensions

SM44HD	AS24
l= length: 2880 mm	**l**: length: 1170 mm
w= width: 1480 mm	**w**= width: 980 mm
h= height: 2050 mm	**h**= height: 980 mm
Weight: 617 kg	Weight: 134 kg

5.2 PACKING FOR OVERSEAS SHIPMENT (OPTIONAL)

The machines shipped by sea freight are covered by an aluminium/polyester (Vacupol) bag which contains dhydrating salts.

Machine packing

-machine **1**
-control board **2**
-guards **3**
-accessories **4**.

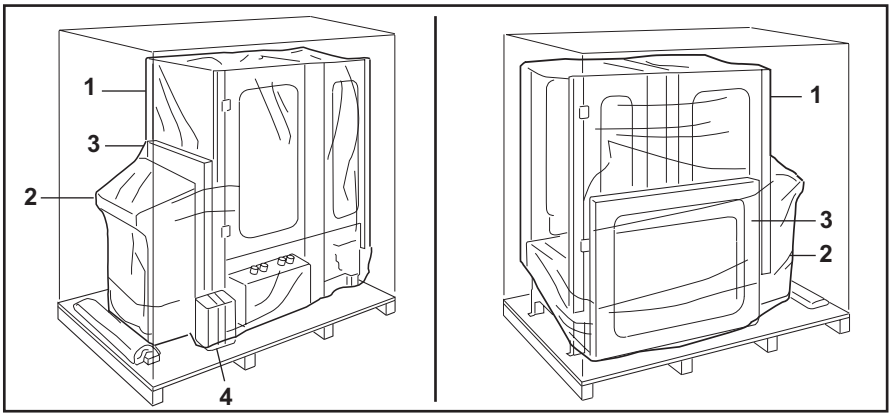

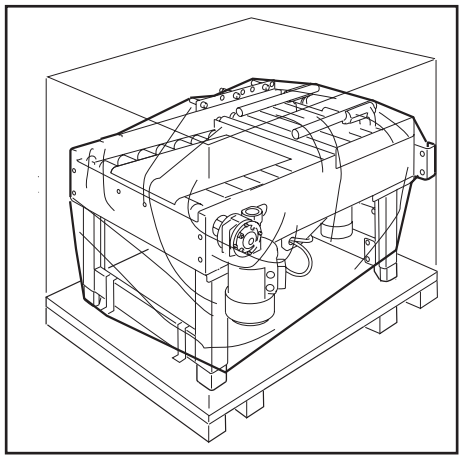

5.4 STORAGE OF THE PACKED OR UNPACKED MACHINE

In case the machine must stay inactive for a long period, please take the following precautions:

- store the machine in a dry and clean place;
- if the machine is unpacked it is necessary to protect it from the dust;
- do not stack anything over the machine;

6-UNPACKING

6.1 Cut the polypropylene straps.
Use a cutter to remove the part of the carton fixed by the staples along the entire perimeter of the packing. (Otherwise remove the staples by using a suitable tool)

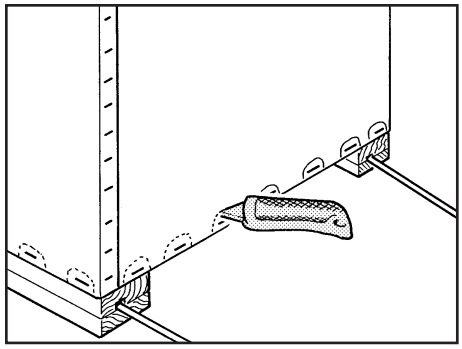

After having cut the carton or removed the staples, uplift the packing in order to free the machine. (2 persons)

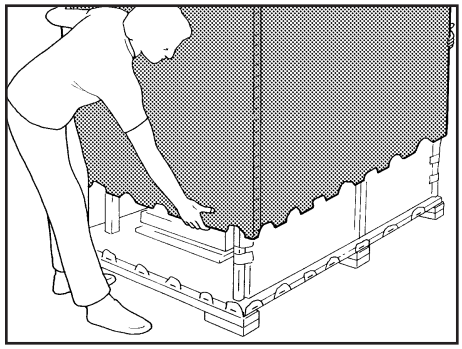

Move the machine and the infeed conveyor where they will be located.

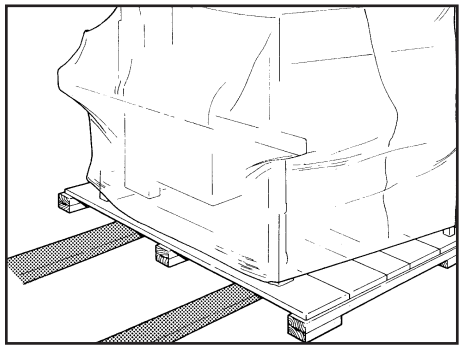

Cut the stretch film and remove the control board, the guards panel and the accessories box.

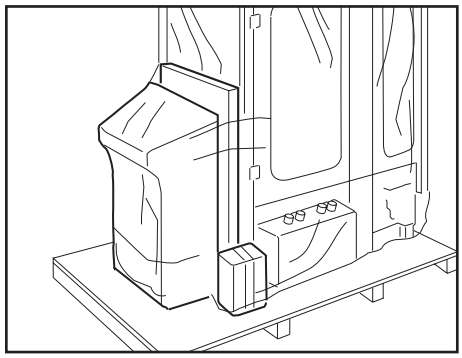

Sealing machine brackets removal
Caution: the operations must be accomplished on all the four legs one at a time.

Remove the screws **1**;
Unscrew the nut **2** and remove the bracket;.
Replace and tighten the screws **1**;
Acting in similar way on the other legs, in sequence.

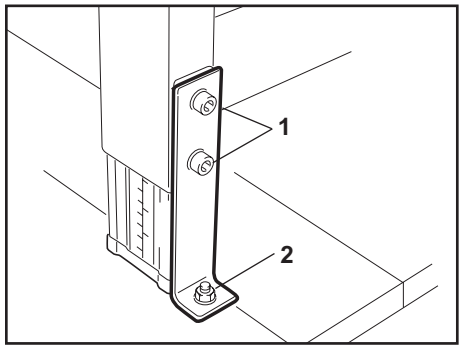

. Uplift the machine positioning the lift forks where there are the labels on right hand side or front-back sides and remove the pallet.

Machine weight + control board: 430 + 70 kg.

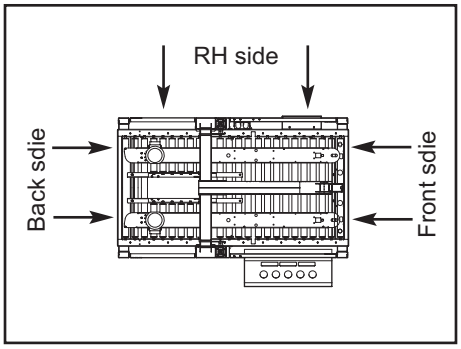

Conveyor brackets removal

Unloose the nuts **1** and remove the brackets.

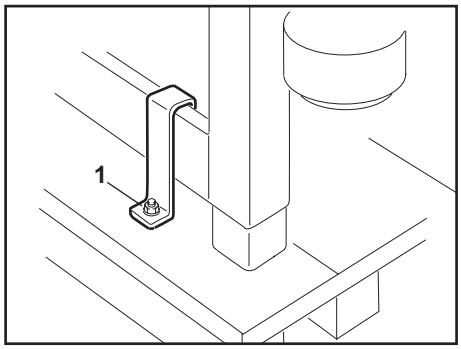

Uplift the conveyor position the lift forks where there are the labels on front or back side and remove the pallet.

Conveyor weight: 90 kg

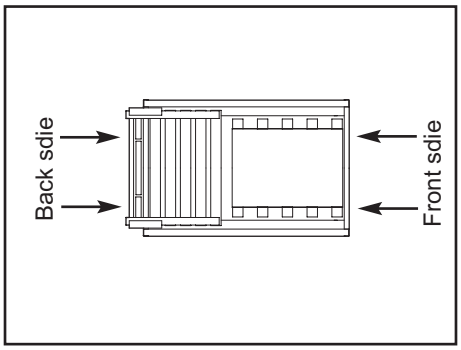

6.4 PACKING DISPOSAL

The packing of the machine Mod. SM44 HD is composed of:

- wooden pallet
- carton box
- wooden supports
- steel fixing brackets
- polythene foam protection
- plastic straps (PP)
- clay dehydrating pouches
- aluminum/polyester/polythene bag

(only for seafreight shipments)

For the disposal of these materials please follow the provisions of the law in your country.

7-INSTALLATION

7.0. SAFETY MEASURES
Read carefully chapter 3.

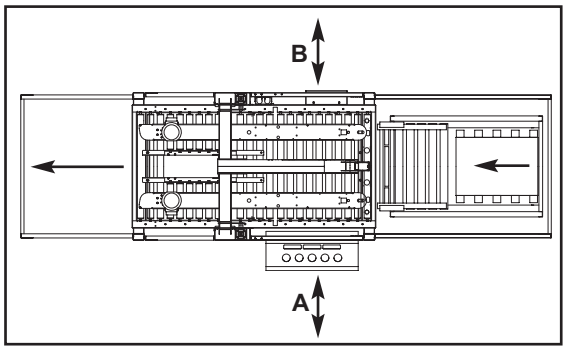

7.1. ENVIRONMENTAL CONDITIONS REQUIRED
-Temperature min. = 5 °C; max. 40 °C
-Umidity min 30%; max. 80%
-Dust free environment

7.2. SPACE REQUIRED FOR MACHINEOPERATION AND MAINTENANCE
Min. distance from the wall: **A** = **1500** mm; **B** = **1000** mm;
Min. height:= **2500** mm

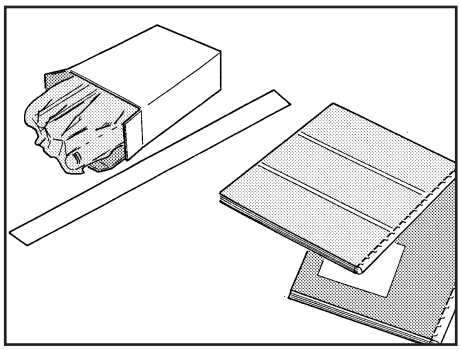

7.3 SPARE PARTS AND THREADING TOOL FOR TAPING HEADS

For a detailed description of the tools kit see section 13.1.

7.4 MACHINE POSITIONING
Raise the machine with a fork lift positioning the lift forks under the points where there are the labels.

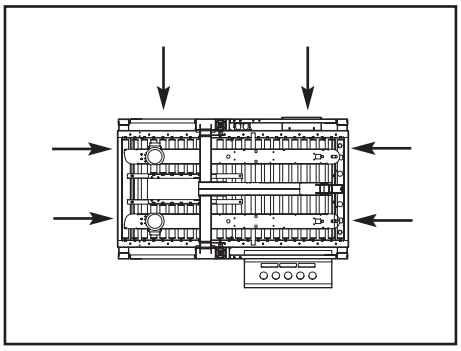

7.4.1 WORK HEIGHT ADJUSTMENT
Lift the machine as shown in picture.
Unlock the screws and take the legs out looking for the desired conveyor bed height on the graduated label.

Then lock the screws again.

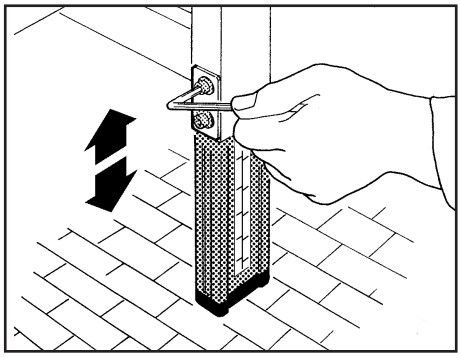

7.5 SAFETY GUARDS: INSIDE AND OUTSIDE MACHINE EMERGENCY STOP PUSH-BUTTON

Position and assemble the inside (**A**) and outside (**B**) guard panels with the upper and bottom brackets and stiffening frofile plates as shown in the pictures.

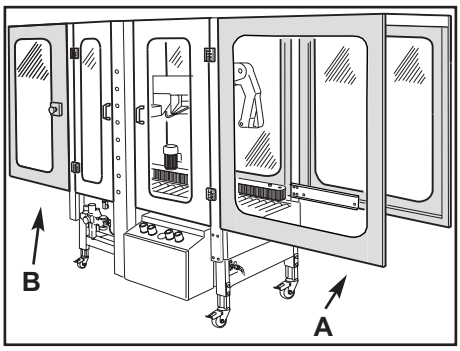

7.5.1. INSIDE SAFETY GUARDS

Support brackets (upper and bottom); 4+4 socket head screws each bracket.

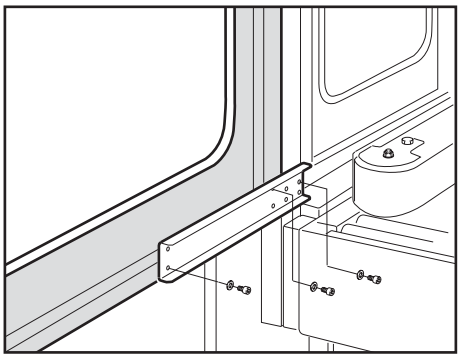

Stiffening profile plate (upper): 2+2 socket head screws.

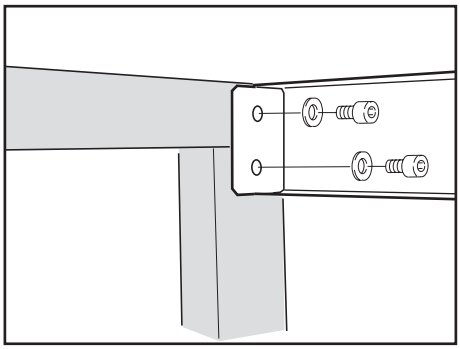

7.5.1. OUTSIDE SAFETY GUARDS

Support brackets (upper and bottom); 4+4 socket head screws each bracket.
Left hand bracket (with pre-assembled photocell);
Right hand bracket (with pre-assembled reflector)

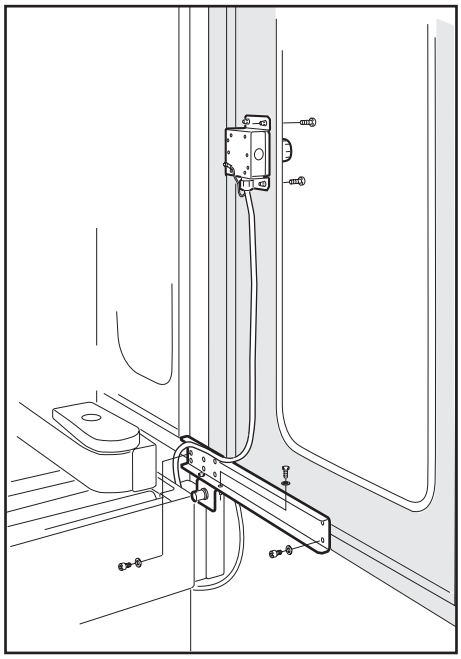

Assemble the emergency push button unit as shown.

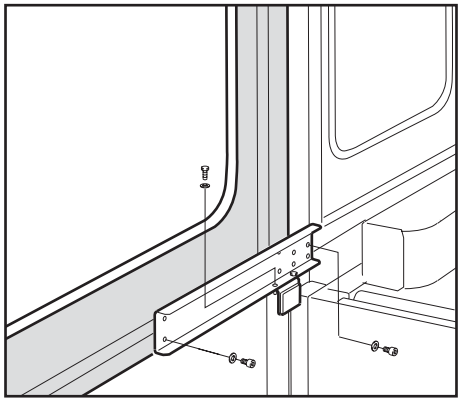

Stiffening profile plate (upper): 2+2 socket head screws.

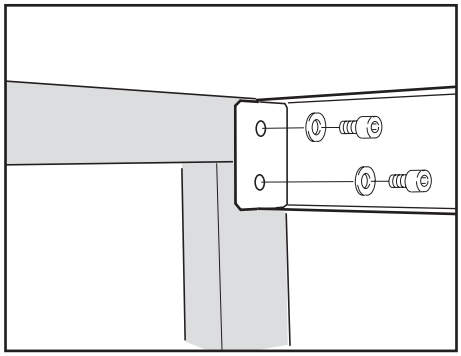

7.6 CONNECTION BETWEEN THE INFEED CONVEYOR AS24 AND THE SM44 HD

Uplift the infeed conveyor placing the forks under the points where there are the labels.

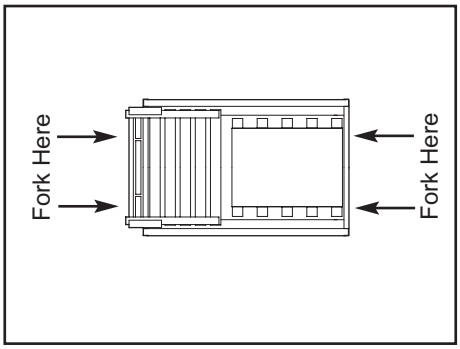

Loosen the screws **A**.
Move out the leg with wheel **B**.
Paying reference to the graduate scale, lock the screws A at the desired height.

Do the same on all the 4 legs.

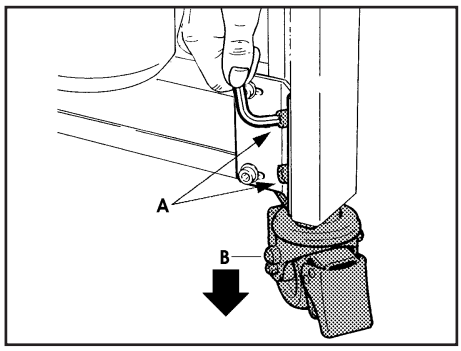

Approach the infeed conveyor to the machine and fix it using the screws previously removed .

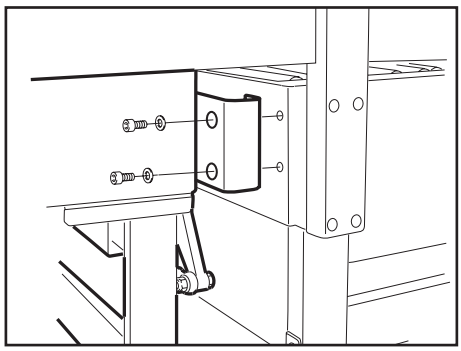

B10, B1, B2 infeed conveyor photocells connections.

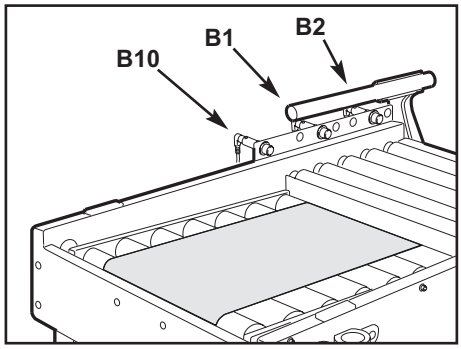

Insert the B10, B1 photocells screw connector in the plug on the sealing machine bench as shown.

Connect the cable with screw connector deriving from the machine to the relative B2 photocell on the infeed conveyor.

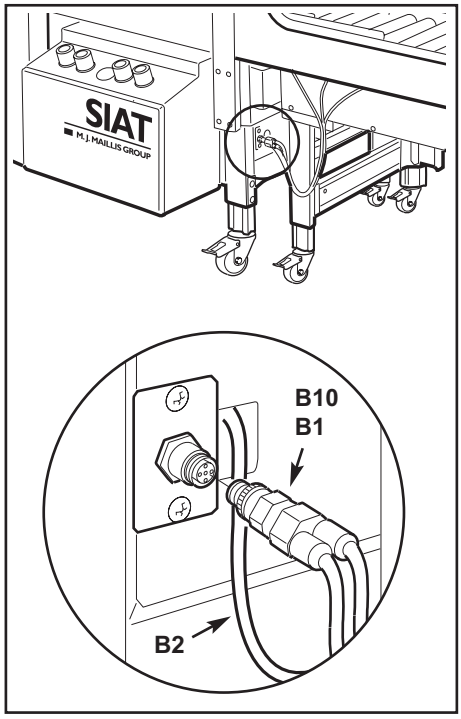

Connect air tubes from the sealing machine to the conveyor centering guides cylinder connectors (**1**) and to conveyor belt cylinders (**2**).

Connects the air tubes to the connectors above mentioned pay attention to the reference numbers.

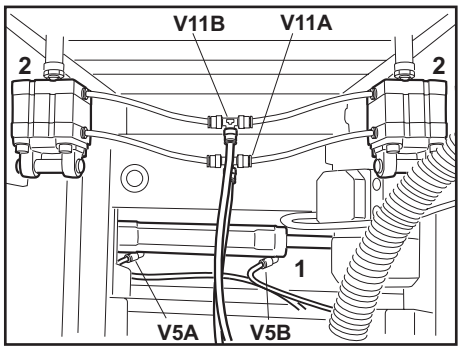

7.7 MAIN PNEUMATIC CONNECTION

-Connect an air tube to the ON/OFF valve and fix it with a strap.
Minimum inside diameter of the tube 10 mm; air pressure 6 BAR.

-Give air to the machine by the ON/OFF valve.

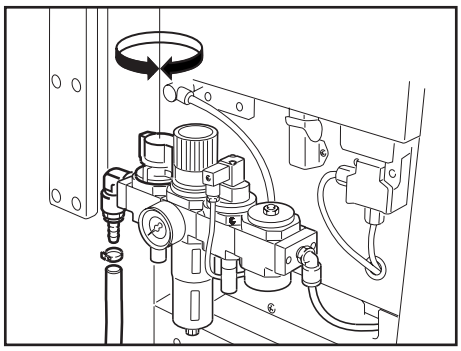

7.8 CONTROL BOARD CONNECTION

Position the control board near the machine.

Feeder cables:
Connect the cable with multipolar connectors from the machine and from conveyor to the control board.

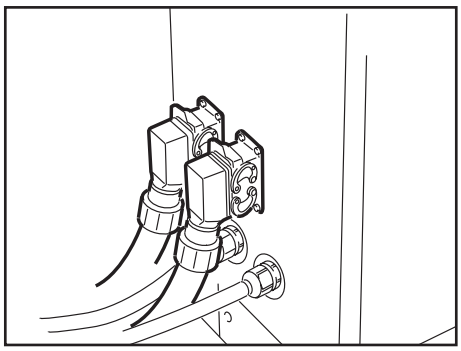

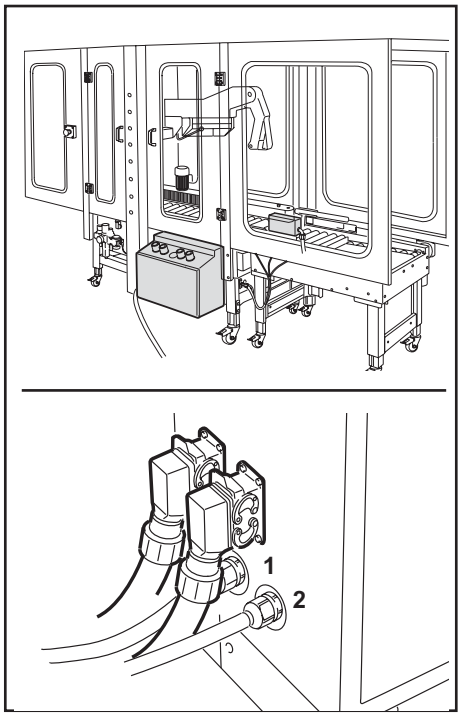

Front and back junction boxes connections (1, 2):

Front junction box connector.

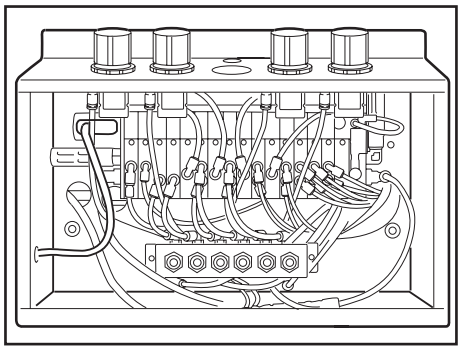

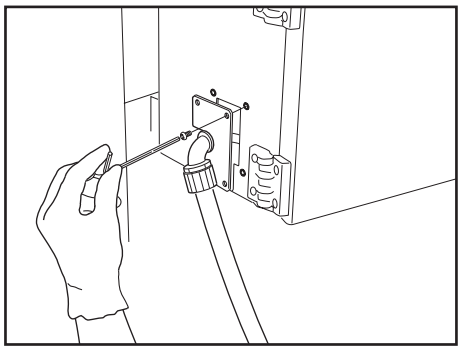

Back junction box connector.

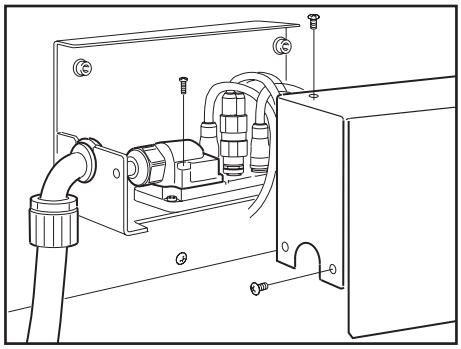

7.11 PRELIMINARY ELECTRIC CHECK-OUT

Before connecting the machine to the mains please carry out the following operations:

7.11.1 Make sure that the socket is provided with a ground protection circuit and that both the mains voltage and frequency meet the indications on the name plate of the machine.

7.11.2 Check that the connection of the machine to the mains meets the provisions of law and/or the safety regulations in your country.

7.12 MACHINE CONNECTION TO THE MAINS AND CHECK-OUT

Installed power = 0,620 kW

-Connect the power cable (**A**) of the control board to an electric socket.

-Standard power supply 400Volt 50 Hz 3Ph.

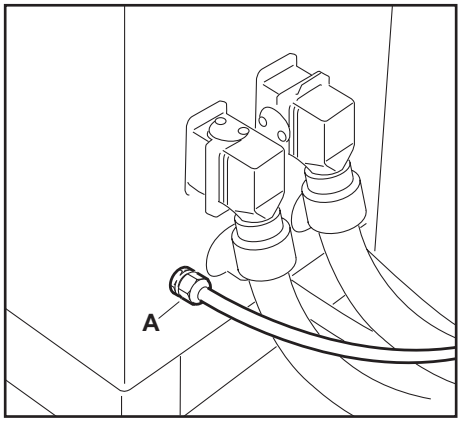

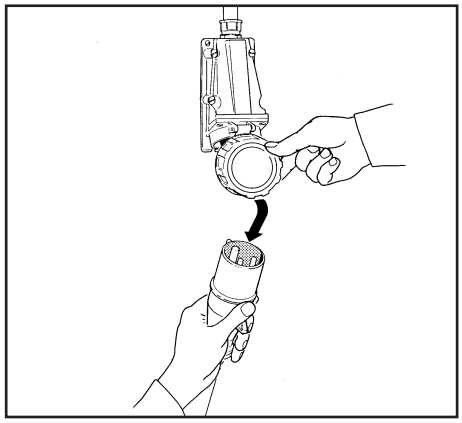

7.11. CHECK-OUT OF PHASES (FOR THREE-PHASES ONLY)

Procedure to be followed in order to connect correctly the poistion of the phases:

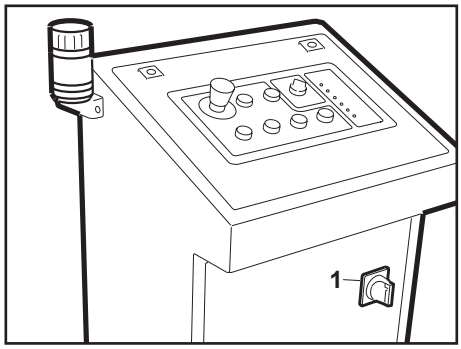

-Set the main switch **1** in ON position;

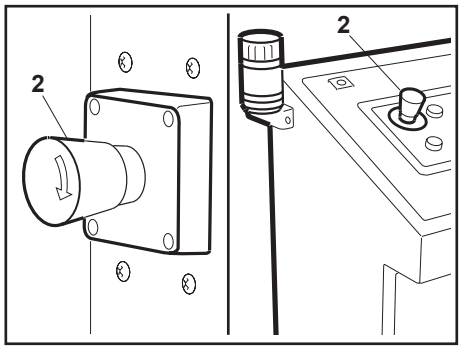

-Check that safety guard panels are clearly shuts;

-Release the emergency stop puh buttons rotating them clockwise;

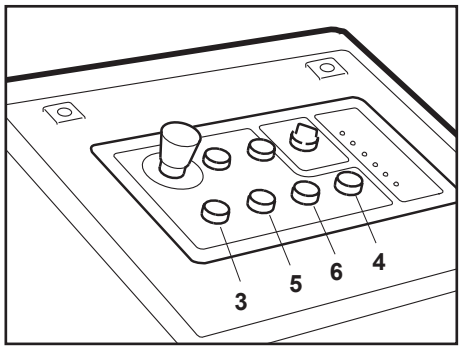

-Push the AUXILIARIES button **3**;
-Push the RESET button **4**;
-Push the START button **6**;

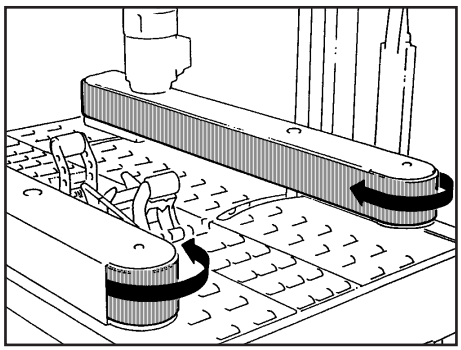

Check the rotation direction of the side drive belts.

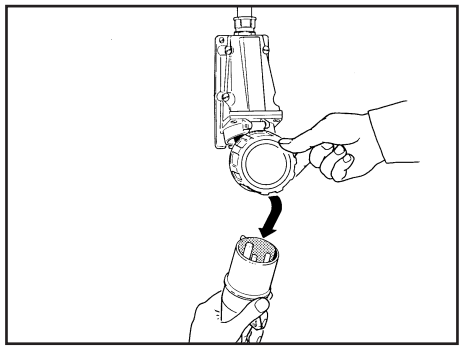

In case of wrong direction of rotation operate as follows::

-Push the STOP button **5** and disconnect the plug;

-Invert two phases on the terminals of the plug;

-Repeat the above mentioned procedure.

8-CONTROLS

8.1. CONTROLS BOARD

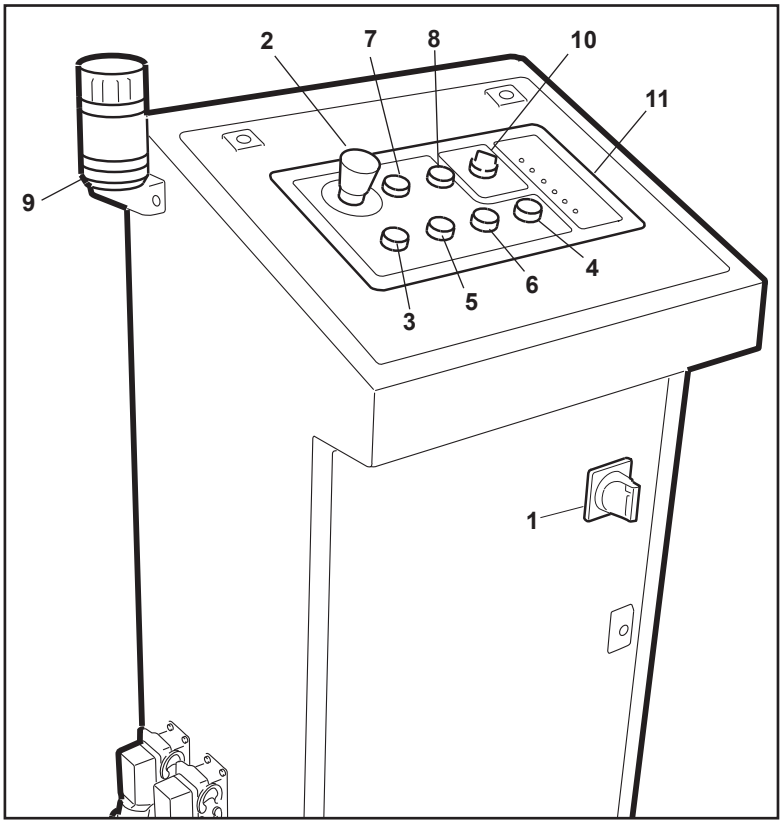

1. **Main switch**
2. **Emergency stop push button** (lockable)
3. **Auxiliaries push button** (control board electrical components habilitation)
4. **Reset push button** (new work cycle predisposition)
5. **Stop push button**
6. **Start push button**
7. **Voltage warning light**
8. **Thermal switch warning light**
9. **Warning (flashing light + buzzer**

10. **Operating mode panel** (See paragraph 9)
    a) Selector switch
    1) Operating mode: 'unchanging box size'
    2) Operating mode: 'automatic'
    3) Operating mode: 'transit only'

11. **Warning lights panel** (See paragraph 9)
    a) Cycle time out
    b) Minimum gap between side belts
    c) Emergency (emergency push button pressed or safety guard opened)
    d) Full sealing line
    e) Low air pressure or insufficient brake of the cylinders controlling the top taping head frame
    f) Tape end/breakage

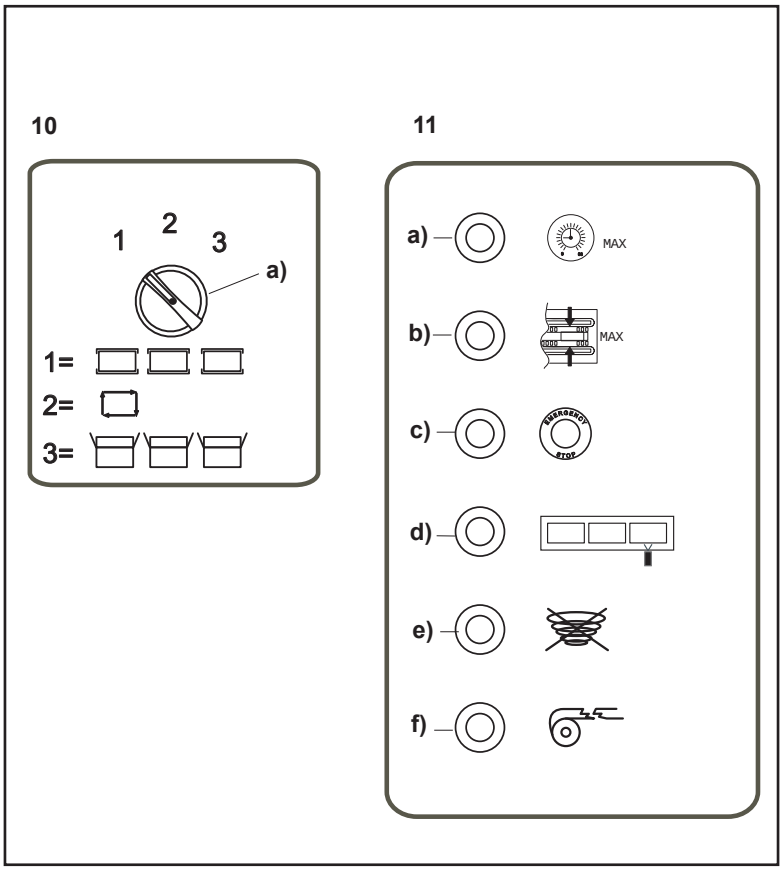

2. **Lockable emergency stop push button on outside safety guards**

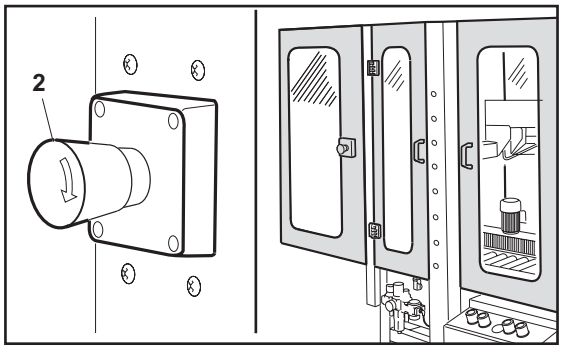

FRONT JUNCTION BOX CONTROLS
(See paragraph 11))

1. **Centering guide pressure regulator**
2. **Side belts (motorizations) pressure regulator**
3. **Box height pick-up pressure regulator**
4. **Upper unit pressure regulator**

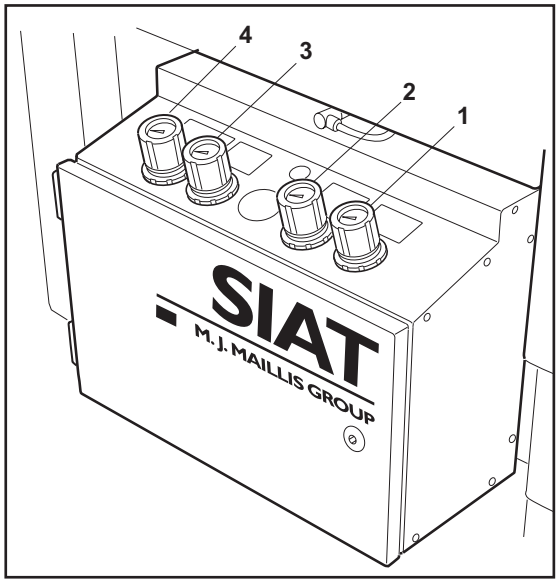

9.1 Give air to the machine by the ON/OFF valve, set the main switch in ON position; close the safety guards; release the E-stops; press AUXILIARIES button, press RESET button; press START button.

9.2 The box, after passed the infeed conveyor belt, obscures the first photocell (at the first working cycle the photocell doesn't enable no function)

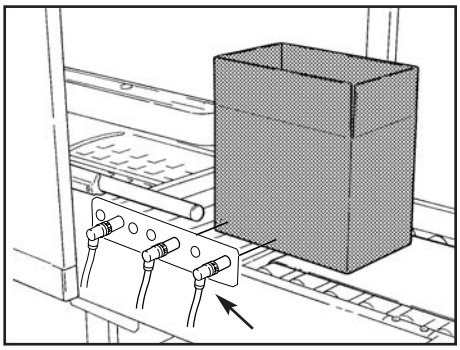

When the second photocell is obscured the infeed conveyor belt goes down in order to stop the next box.
The side guides **A** aligne the box.

The next box obscuring the first photocell cause the infeed conveyor belt stoppage.

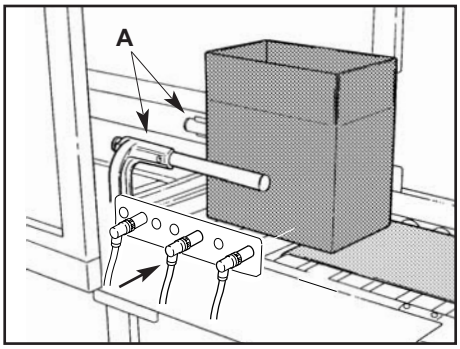

The side guides open and the box obscures the third photocell.
The side drive belts **B** go against the box and, if the box is longer than 500 mm, the rear flap folder is controlled.

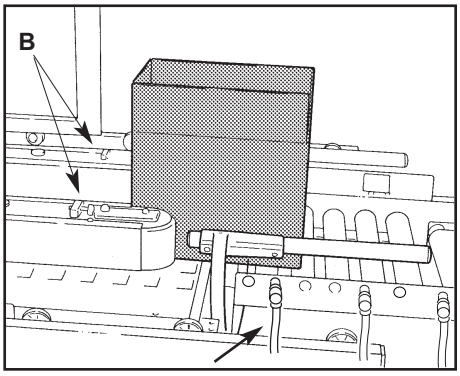

When the 4th photocell is obscured, the side drive belts stop.

The gate between the rollers, positions the box correctly.

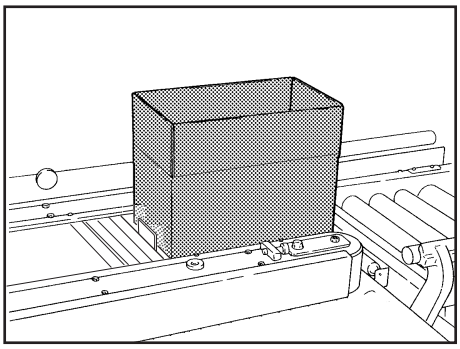

The upper group then comes down on the box after folded the front flap, the height pick-up device stops the upper group descent.

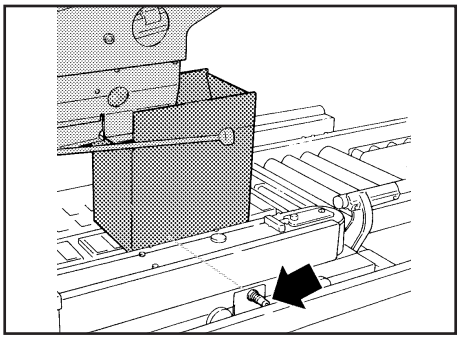

Simultaneously the rear flap is folded the fork goes down and the side belts restart to run.

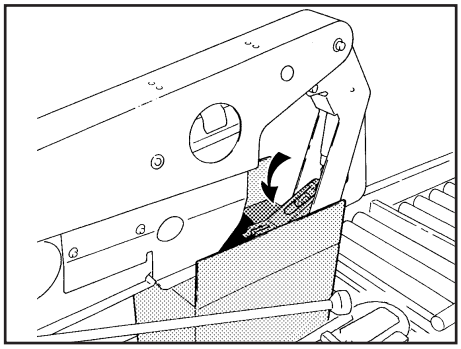

The side flaps are folded.

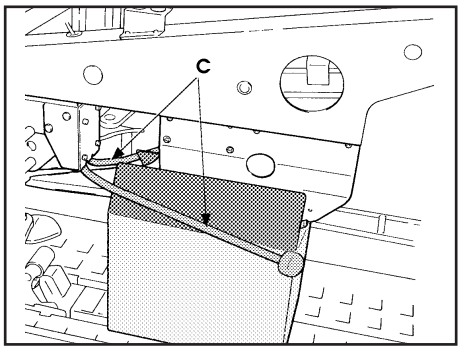

The two taping heads seal the box with adhesive tape.

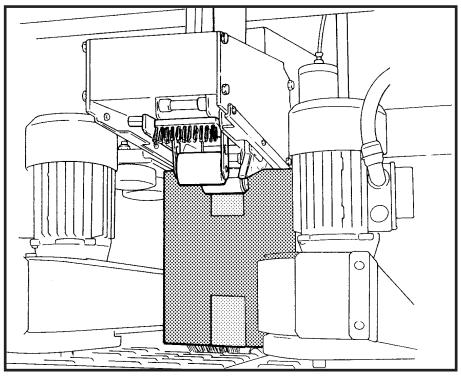

When the box has passed the fifth photocell, the upper group goes up, the side drive belts open and the infeed conveyor belt (on which awaits the next box) comes up and restarts.
The sealing machine begins again with a new cycle.

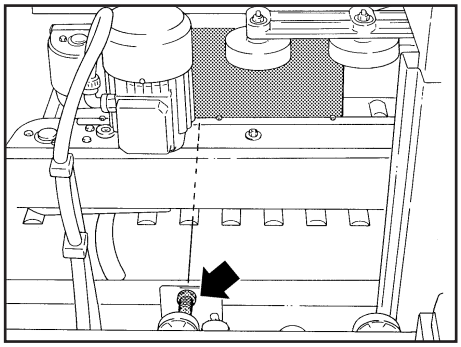

IMPORTANT!
If, for any reason, the box should stop inside the machine after 10 seconds the machine stops.
To remove the box and restart operate as follows:

-press the E-stop,
-open the safety guard,
-remove the box,
-close the safety guard an release the E-stops,
-press the AUXILIARIES push-button;
-press the RESET push-button,
-press the START button to start the cycle

9.3 OPERATION METHODS

The SM44-HD works only in automatic: safety guard closed, E-stop released, START button pressed, air circuit open.

9.3.1. AUTOMATIC OPERATING MODES

-Unchanging box size (selector switch **10** on **1** pos.): the machine acknowledges the size of the first box.
The upper unit maintains its position along whole production.
Introducing a box of different size with consequent machine jam the same stop after 10 seconds with activation of the''cycle time out'' warning light on the control board.

-Automatic (selector switch **10** on **2** pos.): the machine acknowledges the box size whenever a new box are placed on the infeed conveyor belt.

-Transit only (selector switch **10** on **3** pos.): upper taping unit out of operation; the box is sealed only on the bottom side.
Removing the bottom taping unit the boxes can be simply moved inside-outside; a useful condition when the sealing machine is placed in a automatic packaging line.

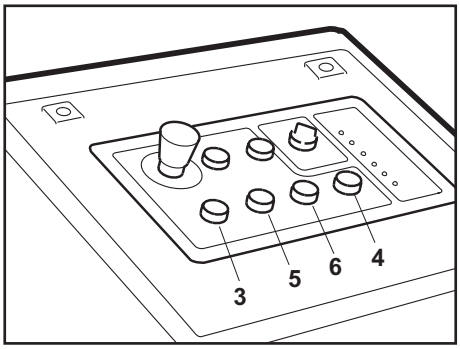

9.4. STOP METHODS

9.4.1. NORMAL STOP

STOP push button **6** on control board panel: the push-button must be pressed at the working cycle end.
To restart press RESET **4** then START **5**.

9.4.2. EMERGENCY STOP

Lockable E-stops pressed or safety guard open. They stop the machine at any point of the cycle; also pneumatic circuit are disconnected.
To restart release the E-stops and close the sfatey guards as necessary and then:
-press AUXILIARIES **3** push-button
-press RESET **4** push-button,
-press START **5** push-button.

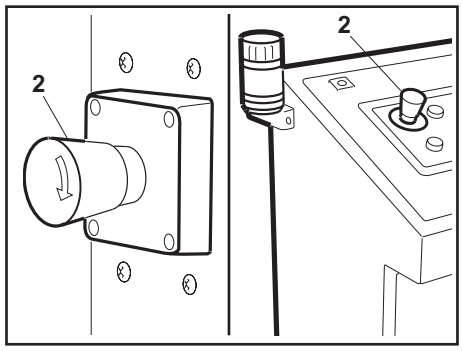

9.5 ALARMS

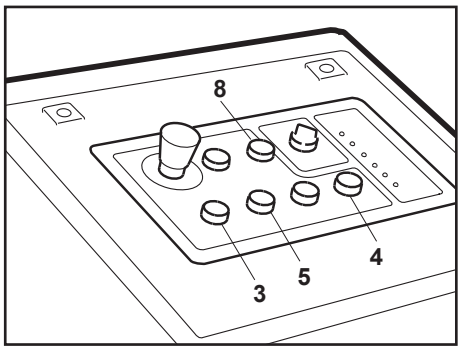

Warning light **8 :** thermal switch activation (motor overload)
-The machine cannot be started; machine stops if its running
-To restart press **3**, after **4** , then 6 push-buttons.

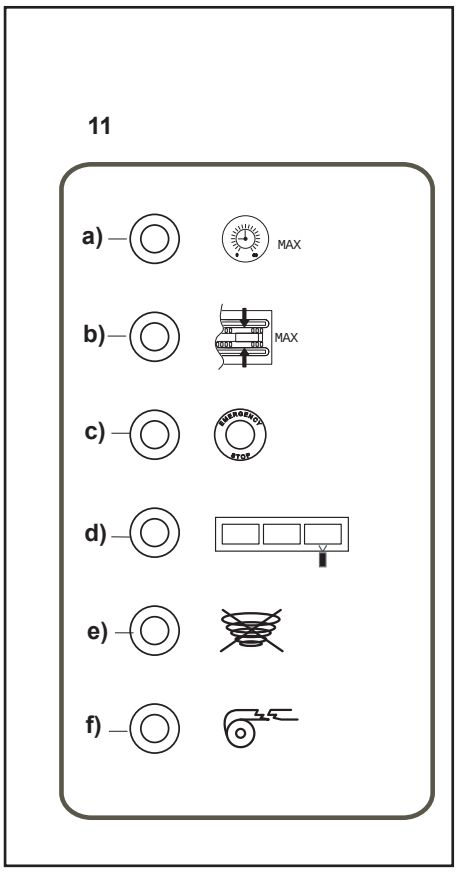

Warning light **11a**: time out cycle (the machine will stop when the cycle taping boxes is not done just in time as preselected; 10 seconds approximately).
-machine stop.
-to restart press **4**, **5** push-buttons; if has been necessary open a safety guard to eliminate a jam, press **3**, **4**, **5** push-buttons.

Warning light **11b**: minimum gap between side belts (box size below allowed mimimum dimensions or no box)
-machine stop.
-to restart press **4**, **5** push-buttons; if has been necessary open a safety guard to eliminate a jam, press **3**, **4**, **5** push-buttons.

Warning light **11c**: emergency (emergency push button pressed or safety guard opened).
- -machine stop, pneumatic circuit disconnected.
-to restart press **3**, **4**, **5** push-buttons.

Warning light **11d**: full taping line
-Temporary stop of the machine, the outside line photocell is obscured; the cycle restart just when the box is removed and so the above mentioned photocell is reactivated.

Warning light **11e**
1) low air pressure -min. 6 bar or no air.
-the machine cannot be started, machine stops if it is running;
-to restarts press **4**, **5** push-buttons
2) Insufficient brake of the cylinders controlling the top taping head frame.
-start of the machine prohibited or stop if working;
-proceed to adjust the braking system on the cylinders; see section 13 "Maintenance"
-to start push subsequently buttoms **4** and **5**

Warning light **11f**: tape end/breakage
-the machine cannot be started, machine stops if it is running;
-to restarts press **3**, **4**, **5** push-buttons

10-SAFETY DEVICES OF THE MACHINE

10.1 SAFETY GUARD

It limts the access to the machine, protecting the operator from the moving parts.

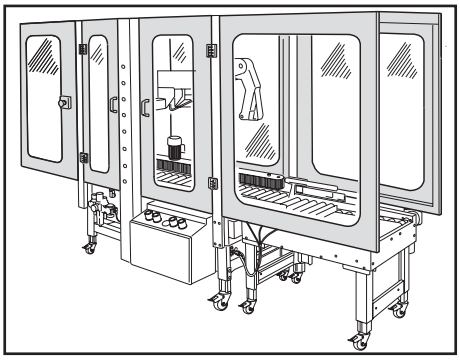

10.2 BLADE GUARDS

Both the top and bottom taping units have a blade guard.

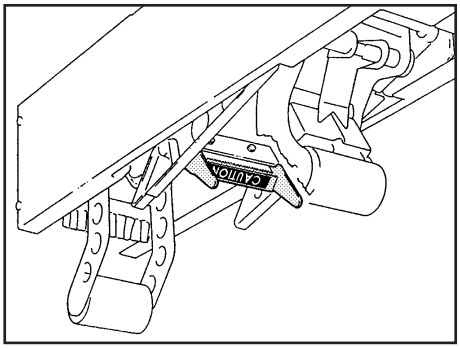

10.3 BELT GUARDS

The drive belts are protected by safety covers on their external sides and by rigid elements on the exit side. These protections must be immediately replaced if damaged.

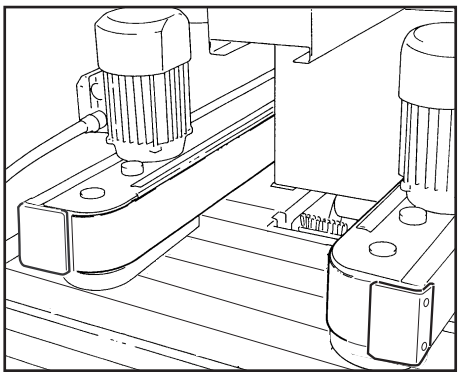

10.4 EMERGENCY STOP BUTTONS

The lockable emergency stop buttons are placed in handy position, on control board and on the safty guards.

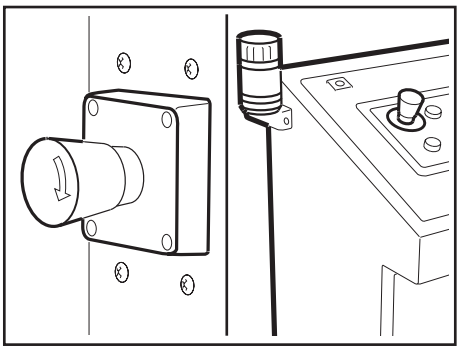

10.5 ELECTRIC SYSTEM

The electric system is protected by a ground wire whose continuity has been tested during the final inspection. The system is also subject to insulation and dielectric strength tests.

11.0 SECURITY

ll the operations to prepare and adjust the machine must be made with the E-stop locked.

11.1. TAPE LOADING ON THE TOP UNIT

Insert a tape roll on the drum and push it fully forward.

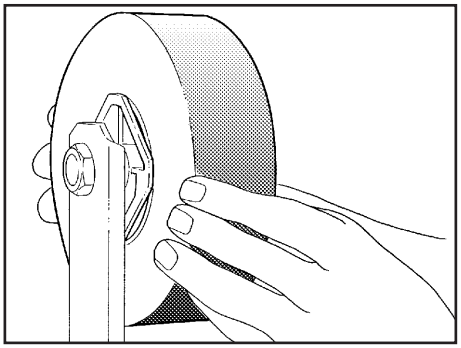

Attach the tape leg to the threading tool (supplied with the tools kit).

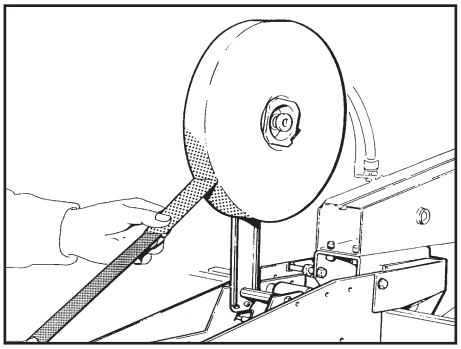

Insert the plastic threading leader through the taping unit. Take care to keep hands away from the tape cutting blades. (see section 3.11-b)

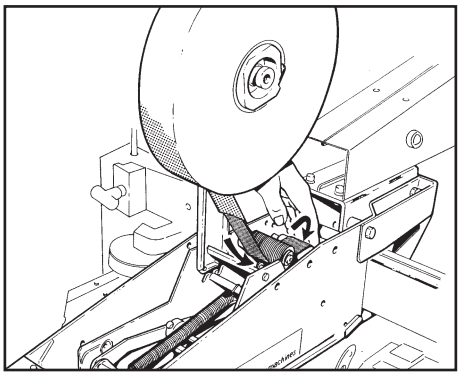

Follow the path through the unit as shown on picture and make sure that the adhesive side is placed on the correct side.

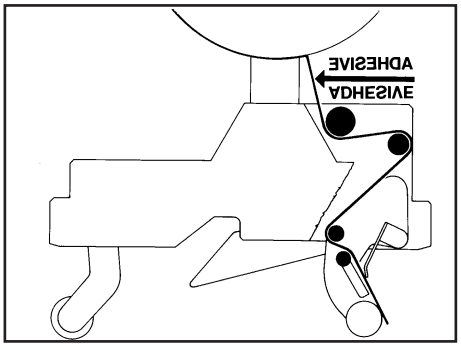

Pull and cut off the excess tape using a pair of scissors as shown.

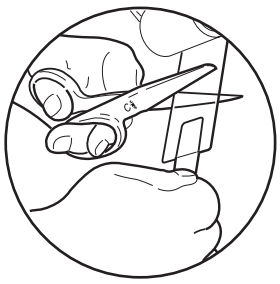

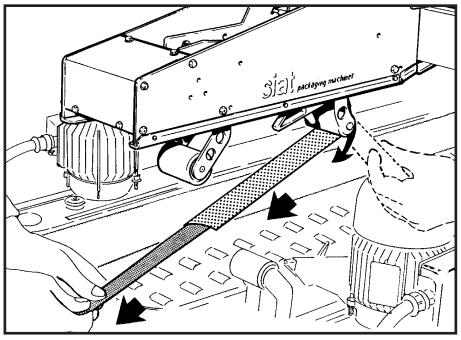

11.2 TAPE LOADING ON THE BOTTOM UNIT

Remove the bottom taping unit from its housing and put it on a working bench;

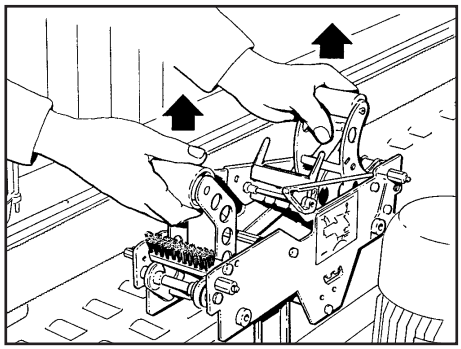

-Put a tape roll on the drum and thread the tape through the unit as shown on the label in the same manner as for the top unit;

-Put the bottom unit back into its housing.

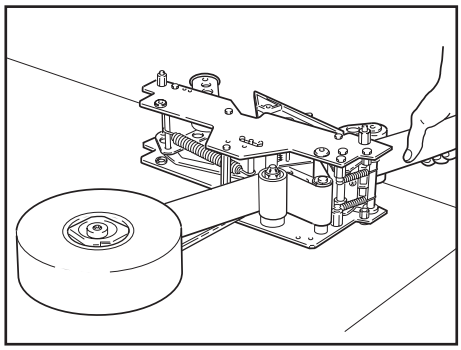

11.3 TAPE DRUM ALIGNMENT

☞ Check the centering of the tape on the rollers of the taping unit.

If necessary unscrew the nut **1** and adjust the screw **2**.

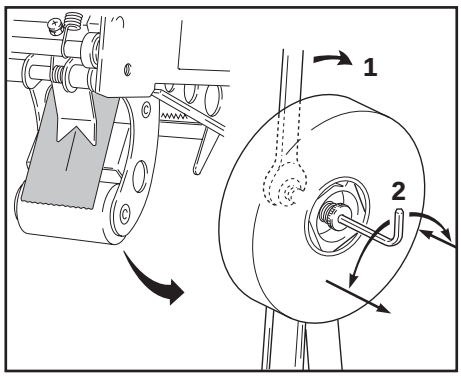

11.4 TAPE DRUM FRICTION BRAKE ADJUSTMENT

☞ Check the tape tension:
- with PVC the tape drum must be free
- with OPP the tape drum must be slightly frictioned

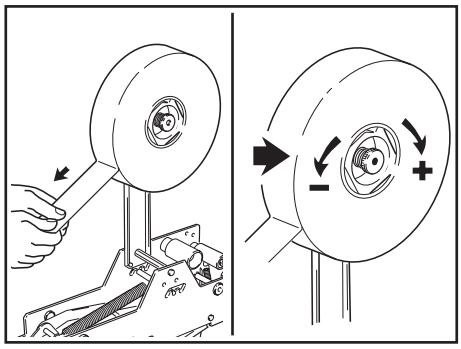

11.5 ADJUSTMENT OF TAPING UNITS ACCORDING TO THE TYPE OF BOXES

☞ Adjust the main spring:
- decrease the spring load for light boxes;
- increase the spring load for heavy boxes.

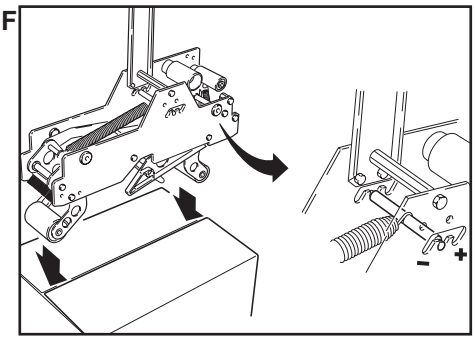

11.6 MAIN PRESSURE REGULATOR

A) it adjusts the entry working pressure
B) gauge to read the entry air pressure
Optimal working pressure: 6 BAR
Feeding tube diameter: 10 mm

N.B.: in case the working pressure is below 6 BAR or the feeding tube has a small diameter, some malfunctions can happen! (es: the upper group comes down, the rear flap folder works but the machine stops)

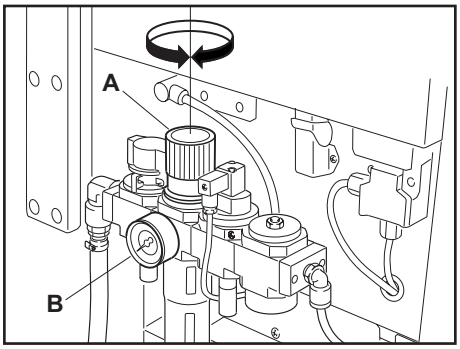

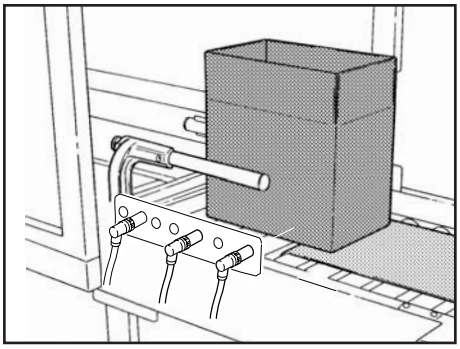

11.7 CENTERING GUIDES PRESSURE

1) Pressure regolator with built-in pressure gauge.

The pressure regulator **1** located on the front junction box adjusts the pressure of the centering guides of the infeed conveyor.

Working pressure: **2,5÷3,5** bar
(entry pressure: 6 bar)

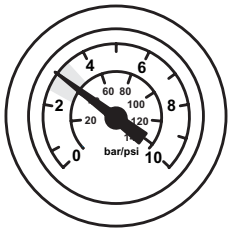

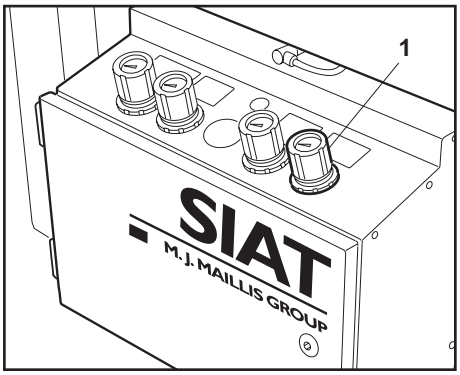

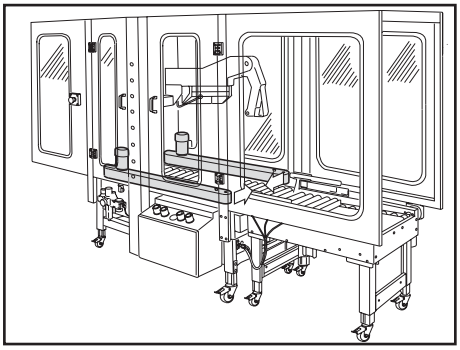

11.8 SIDE DRIVES PRESSURE ADJUSTMENT

2) Pressure regulator with built-in pressure gauge.

The pressure regulator **2** located on the front junction box adjusts the pressure of the side drives against the box.
-Increase for strong or heavy boxes.
-Decrease for light boxes.

Working pressure: **2,5÷3,5** bar
(entry pressure: 6 bar)

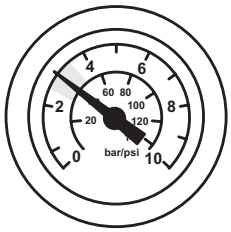

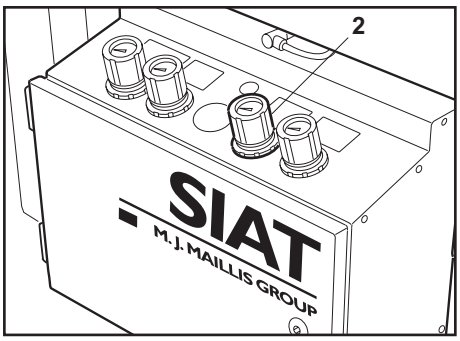

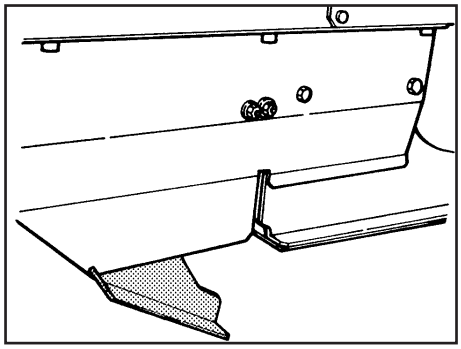

11.9 BOX HEIGHT PICK-UP

3) Pressure regulator with built-in pressure gauge.

The pressure regulator 3 adjusts the pressure according to the board strength.
-Decrease in case of light boxes.
-Increase in case of strong boxes.
-Minimum pressure must be adjusted so that the paddle returns automatically in position once the box is passed.

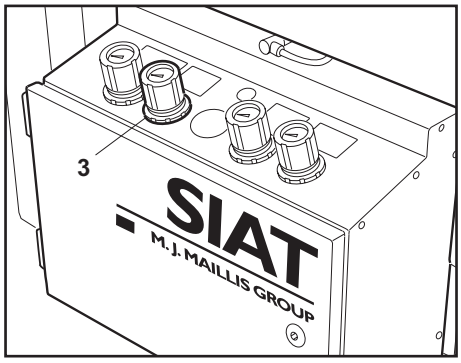

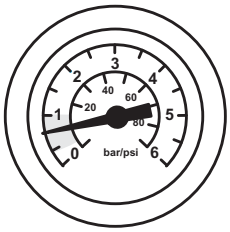

Working pressure: **0,5÷1,0** bar
(entry pressure:6 bar)

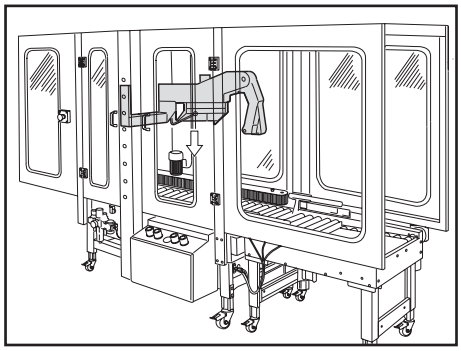

11.10 UPPER UNIT DESCENT PRESSURE REGULATOR

4) Pressure regulator with built-in pressure gauge.

The pressure regulator **4** adjusts the pressure according to the board strength.
-Decrease in case of light boxes.
-Increase in case of strong boxes.

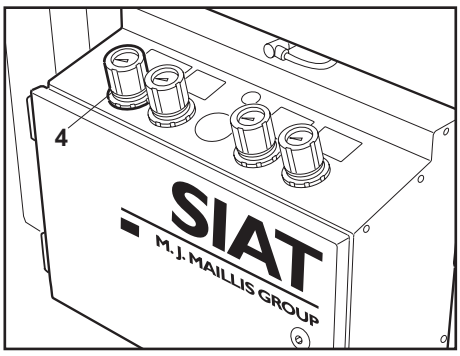

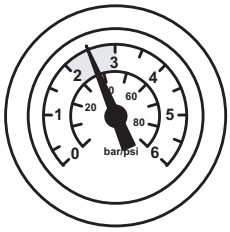

Working pressure: **2÷3** bar
(entry pressure: 6 bar)

11.11 PNEUMATIC SPEED REGULATORS

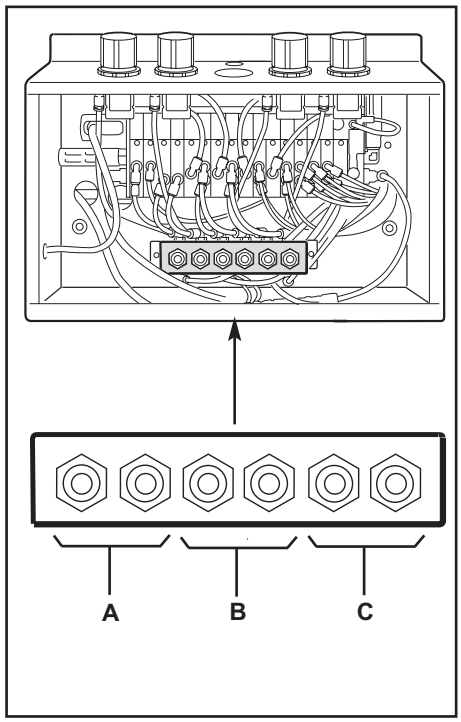

A) Side belts opening-closing speed regulators

B) Centering gudes (infeed conveyor) speed regulators

C) Upper unit ascent-descent speed regulators

Side belts opening-closing speed regulators
These are not common operations. They have to be made only when it has been necessary to work on the pneumatic cylinder.
To change the speed, do as follows:
1)unscrew the locking nut 1
2)turn the knob **2** clockwise to reduce the belts closing speed; anticlockwise to increase the belts closing speed.
3)unscrew the locking nut **3**
4)turn the knob **4** clockwise to reduce the belts opening speed, unticlockwise to increase the belts opening speed.

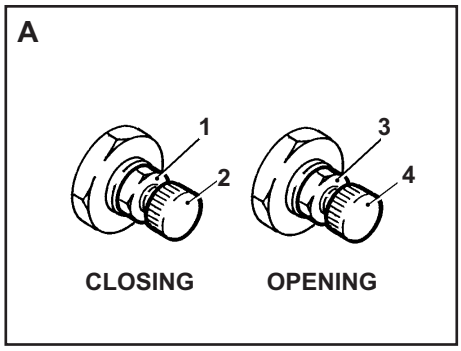

Centering guides opening-closing speed regulators
These are not common operations. They have to be made only when it has been necessary to work on the pneumatic cylinder.
To change the speed, do as follows:
1)unscrew the locking nut 1
2)turn the knob **2** clockwise to reduce opening speed; anticlockwise to increase opening speed.
3)unscrew the locking nut **3**
4)turn the knob **4** clockwise to reduce closing speed, unticlockwise to increase closing speed.

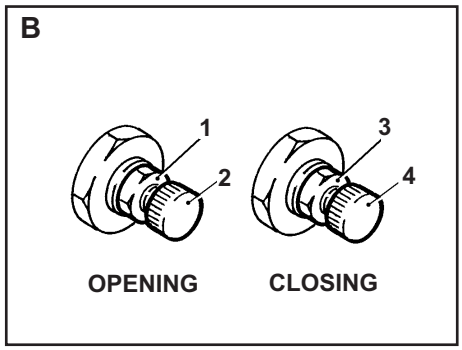

Upper unit ascent-descent speed regulators
These are not common operations. They have to be made only when it has been necessary to work on the pneumatic cylinder.
To change the speed, do as follows:
1)unscrew the locking nut 1
2)turn the knob **2** clockwise to reduce the descent speed; anticlockwise to increase the descent speed.
3)unscrew the locking nut **3**
4)turn the knob **4** clockwise to reduce the ascent speed, unticlockwise to increase the ascent speed.

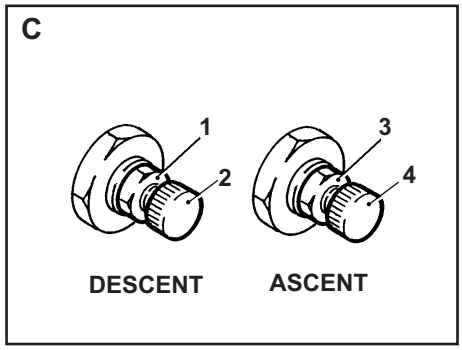

11.12 SPEED REGULATORS OF THE REAR FLAP FOLDER

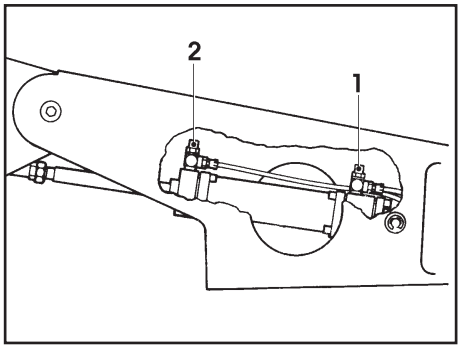

These are not common operations. They have to be made only when it has been necessary to work on the pneumatic cylinder.
To change the speed, do as follows:
The speed of the rear flap folder unit can be akjusted by the flow regulators mounted on the pneumatic cylinders.. It is necessary to introduce a screwdriver into the hole corresponding to the regulator:

1) to adjust the descent speed of the arm.
2) to adjust the ascent speed of the arm.

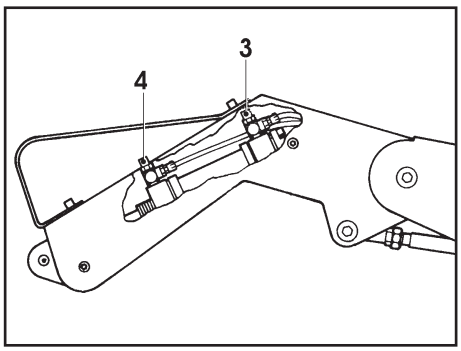

3) to adjust the descent speed of the flap folder.
4) to adjust the ascent speed of the flap folder.

11.13 ADJUSTMENT OF THE UPPER UNIT HEIGHT

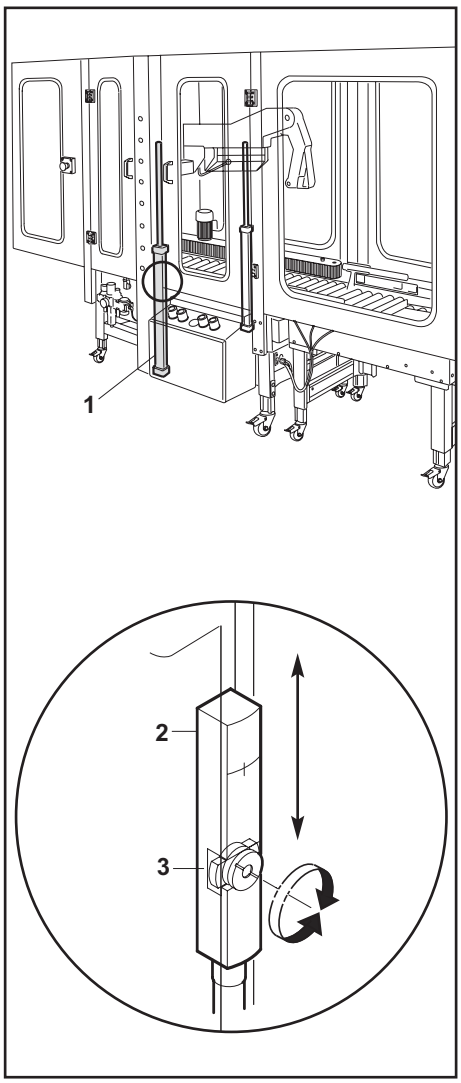

In case the height of the box to be sealed is not higher then 300 mm, it is possible to stop the ascent of the upper group so to reduce the time of the sealing cycle .

To limit the upper group ascent move down the magnetic sensor **2** located on the air cylinder **1**, machine side operator, after have removed the guard.
Turn the cam screw **3** to reposition the sensor.

Position the sensor so that the upper unit stops at 100 mm abopve the bopx height.

11.14 ADJUSTMENT OF THE SENSOR THAT STOPS THE DESCENT OF THE UPPER UNIT

The descent of the upper group is stopped when the senser 1 is activated (yellow led up).

The sensor is mounted on the cylinder **2** by the support **3**.

To change the intervention time of the sensor do as follows:

1) loosen, the screw **4** of the support;
2) move the support with the sensor along the cylinder;

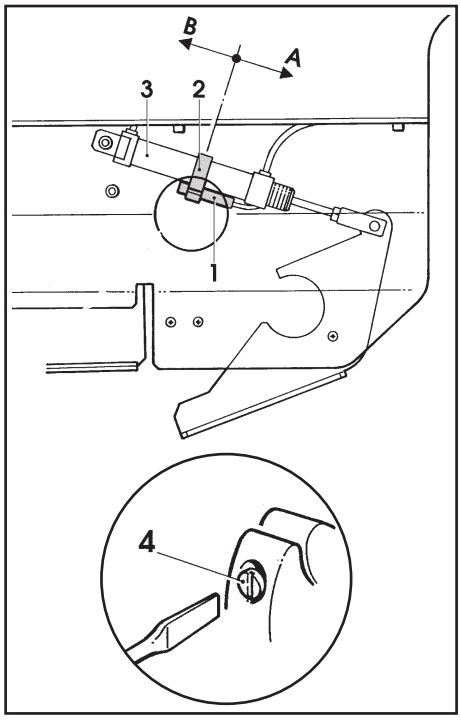

Towards **A** <u>to delay the braking.</u>

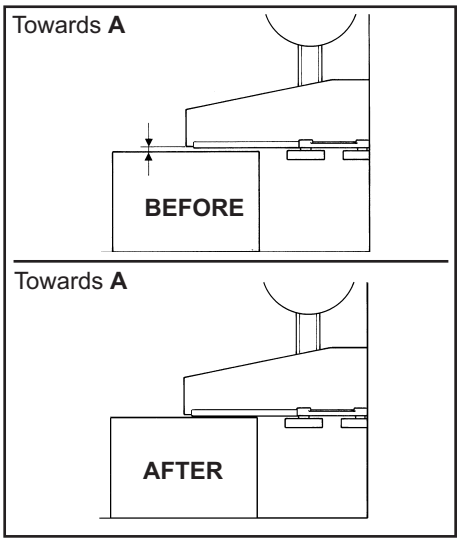

Towards **B** <u>to anticipate the braking.</u>

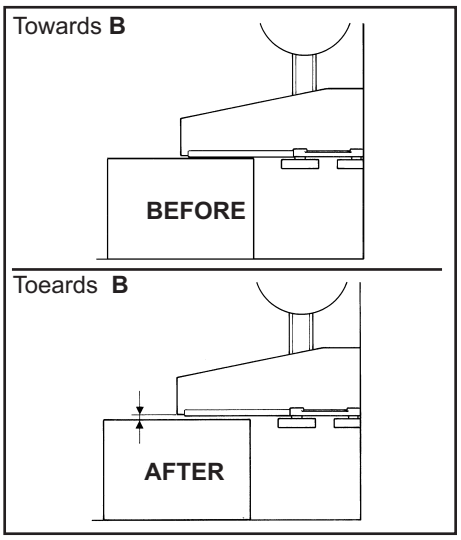

11.15 ADJUSTMENTS OF THE SIDE COMPRESSION ROLLERS

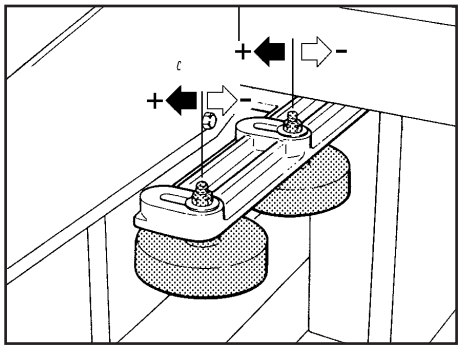

To increase or decrease the pressure of the side rollers on the box, do as follows:

-loosen the nuts;
-change the position of the rollers;
-lock the nuts.

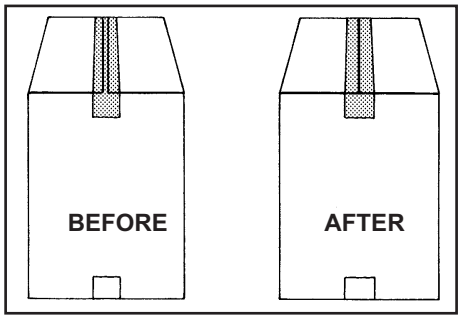

-increase the pressure when the upper flaps are not well closed after the sealing.

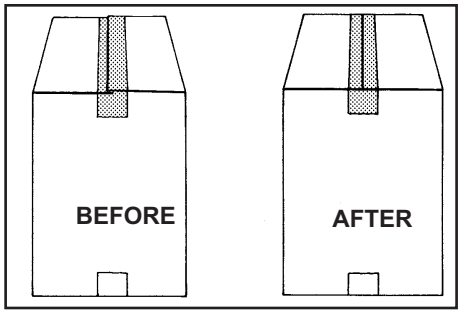

-decrease the pressure when the upper flaps are one upon the other.

11.16 ADJUSTMENT OF THE MAGNETIC LIMIT SWITCH ON SIDE DRIVES AIR CYLINDER

Tle limit switch **2** on the air cylinder body check maximum closure of the side drives avoiding that the compression rollers hit the upper unit.

Some little adjustments are possible by moving the limit switch longitudinally on the cylider body; to do this loose the cam screw **3**.

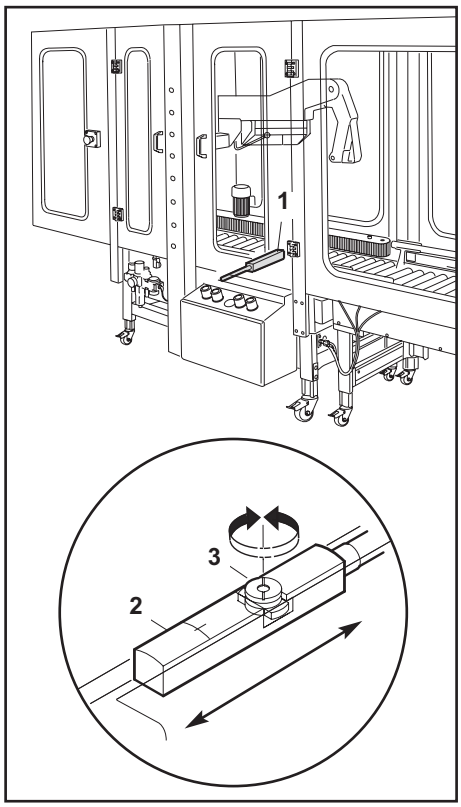

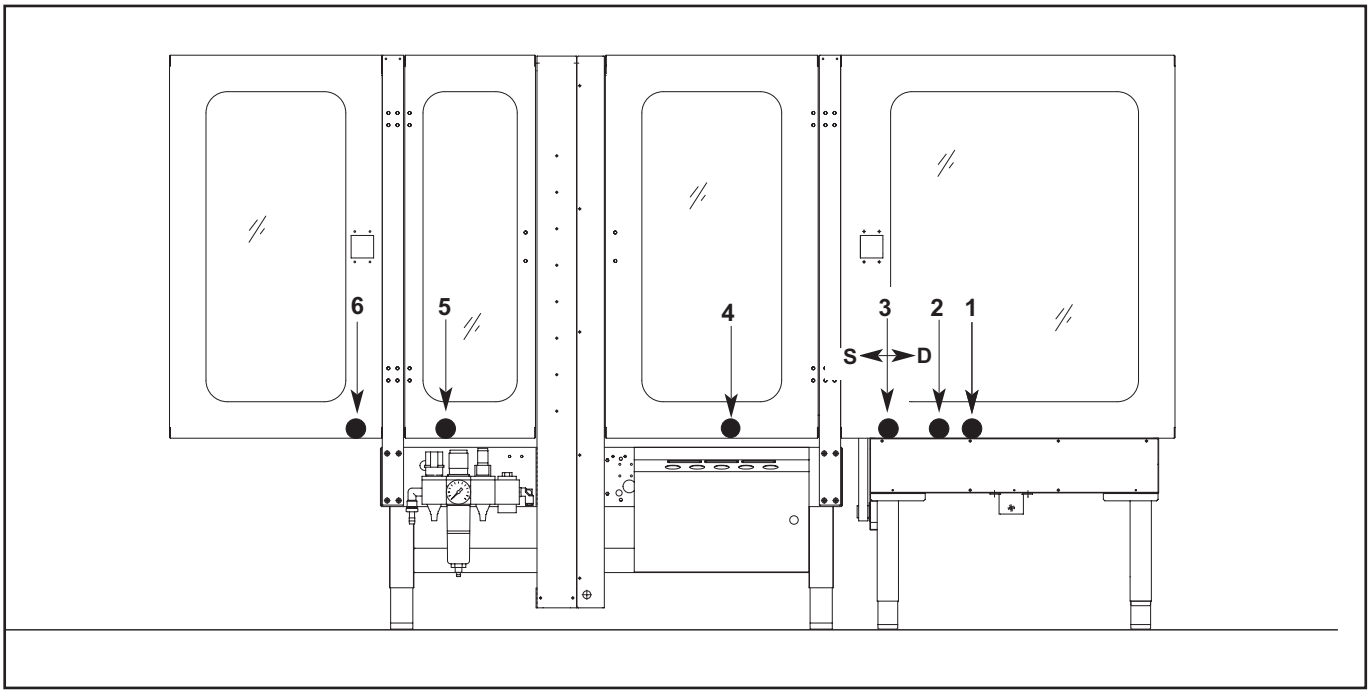

11.17 USE AND ADJUSTMENTS OF THE PHOTOCELLS

PHOTOCELL **1**
The photocell does not operate at the first machine starting ; when is obscured by the next box the motorized plane of the infeed conveyor stops.
No adjustment is necessary.

PHOTOCELL **2**
When is obscured by the box the motorized plane goes down and the side guides center the box.
No adjustment is necessary.

PHOTOCELL **3**
It controls the closure of the side drives and and the descent of the rear flap folder.
The position can be changed according to box lengty; move the photocell towards **D** for long boxes, towards **S** for short boxes.

PHOTOCELL **4**
It stops the side drives and control the upper unit descent.
No adjustment is necessary.

PHOTOCELL **5**
When the box is passed it controls the machine reset for a new working cycle.
No adjustment is necessary.

PHOTOCELL **6**
When is obscured stops the machine and activates the ‘full line’ warning light on the control board.
It’s a temporary stop; he machine restarts just when the box is removed an so the photocell is rearmed.
No adjustment is necessary.

12-SET -UP AND ADJUSTMENTS

12.1 OPERATOR CORRECT WORKING POSITION

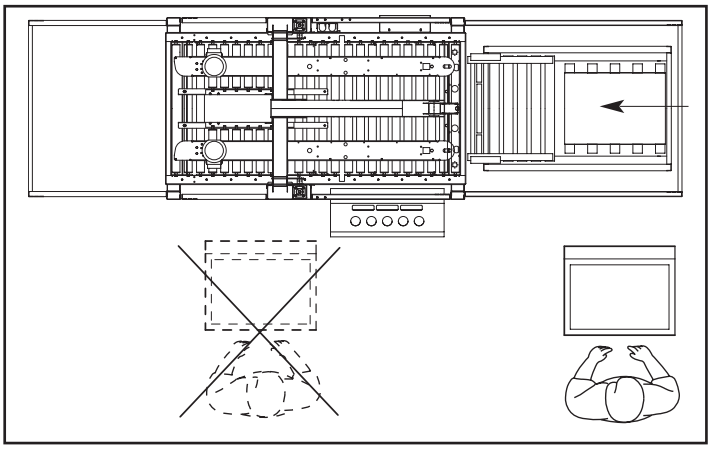

12.2 MACHINE STARTING

- Close the side safety guards
- Release the E-stops
- Give air to the circuit
- Turn the main switch in ON position
- Press the AUXILIARIES button
- Press the RESET button
- Press the START button

12.3 PRODUCTION STARTING

- Before starting, check the main functions of the machine.

1 Entry air pressure 6 BAR, if pressure is below 5,5 the machine functions are not safe.
2 Centering device pressure: 2,5÷3,5 BAR
3 Side drive belts pressure: 2,3÷3,5 BAR
4 Box height pick up pressure: suggested working pressure: 0,5÷1 BAR
5 Upper unit descent pressure: 2÷3 BAR
6 Press the START button and check that E-stops are working properly.
7 Press the START button and check that machine stops if side guards are opened.

12.4 TAPE REPLACEMENT

Operator skill **1**
Each time it is necessary to replace the tape roll, do as follows:
- Press the E-stop;
- Set the main switch in OFF position;
- Open the safety guard
- Do all the operations under points **11.1** and **11.2**

Pay attention to the cutting blades.

12.5 CLEANING

fore carrying out any cleaning or maintenance operation stop the machine by pressing the OFF button on the main switch.

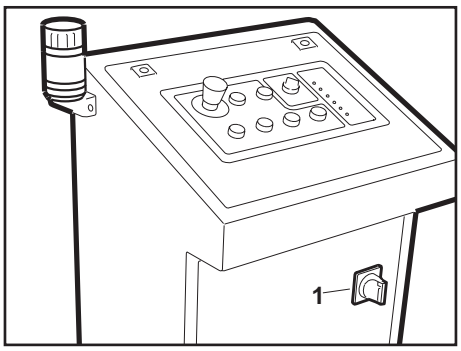

Disconnect the electric power and disconnect pneumatic circuit through valve **A**.

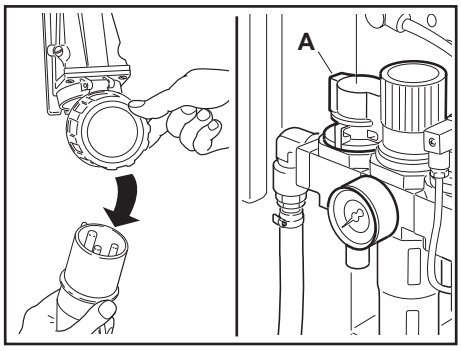

CLEANING - Skill **1** operator
Use dry clothes or light detergents.

Do not use solvents or water jets.

12.6 ADJUSTMENTS

OPERATIONS	OPERATOR'S SJKILL	CHAPTER
Tape replacement	**1**	**11.1**
Tape alignment	**1**	**11.2**
Cheout of the safety devices	**1**	**12.7**
Adjustment of the tape drum friction brake	**1**	**11.3**
Working bed heght adjustment	**2**	**7.4**
Photocells adjustment	**2**	**11.17**
Side compressione rollers adjustment	**2**	**11.15**
Taping heads adjustments	**2**	**11.2**

12.7 SAFETY DEVICES CHECKOUT

1 Taping units blade guard;
2 Lockable emergency stop button;
3 Rigid protection plates mounted on the side drives;
4 Safety guards;

12.8 TROUBLE SHOOTING

TROUBLE	CAUSE	SOLUTION
Tape is not centered on the box.	The side belts are not correctly positioned.	Check the position.
	The box flaps are not centered.	Check the flaps dimensions; the flaps must be equals.
	Tape is not positioned in the center of the taping head.	Adjust the tape position.
The length of the front tape leg on the box is not constat.	Tape path through the heads is not correct.	Check.
	Type unwind tension too loose.	Adjust the tension.
	Knurled roller friction too loose.	Adjust.
	Taping head idler rollers.	Clean and lubricate the rollers
The blade does not cut properly.	Blade dirty of adhesive.	Clean.
	Tape tension not enough.	Increase the friction on the core-holder.
	Springs on cutting lever not strong enough.	Replace.
	Blade damaged (brooken teeth).	Replace the blade.
The tape is not well applied on the rear of the box.	Blade does not cut properly.	Replace/Clean.
	Main spring is not tensioned.	Adjust the spring tension.
	Adhesive residues on the head rollers.	Clean and lubricate the rollers.
The head comes down and crash the box.	The box does not stop properly against the gate (stop device) on the machine rollers.	Check the photocell position (4, paragraph 11.17).
	The box height pick-up is not correctly positioned.	Check the pressure value (0.5-1.0 bar). Check for jams (inside frictions)
	The magnetic limit switch on the the box height pick-up cylinder is not correctly positioned or is not working.	Check position of the magnetic limit switch. Check magnetic limit switch operation.

TROUBLE	CAUSE	SOLUTION
The box is not dragged under the head.	The box is too full load; box side flaps are opened.	Check.
	Driving pulley rings on motorizing side units are wornout.	Replace as necessary.
	Motorizing side units low pressure.	Check pressure value (working pressure 1.5-2.5 bar).
	The head is not correctly positioned; it is too down.	Check the magnetic limit switch position on the box height pick-up cylinder.

13-MAINTENANCE AND REPAIRS

13.0 SAFETY MEASURES

(See section 3)
Carrying out maintenance and repairs may require to work in dangerous situations. This machine has been designed making reference to the standards EN292 and EN292/2.

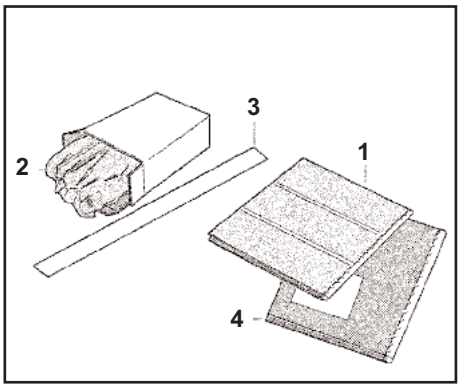

13.1 Tools kit and SPARE parts SUPPLIED WITH THE MACHINE

1 N.1 blade (spare blade for taping unit;
N.1 lower head spring
N.1 upper head spring
N.2 cutter spring
2 Tape threading tool (to feed the tape through the taping unit)
3 Instructions manual of the machine (SMB00055K)
4 Instructions manual of the taping unit

13.2 NATURE AND FREQUENCY OF MAINTENANCE OPERATIONS

OPERATIONS	FREQUENCY	OPERATORS' SKILL	CHAPTER
Lubrications	Quarterly	2	13.5-6-7
Top taping head frame inspection brakes	Every two weeks	2	13.2
Blades cleaning	Weekly	2	13.8
Machine cleaning	Wekly	1	12.5
Checkout of safety devices	Daily	1	13.4
Blades replacement	as needed	2	13.9
Belts replacement	as needed	2	13.10

13.3 CHECKOUT TO BE PERFORMED BEFORE AND AFTER EVERY MAINTENANCE OPERATION

Always set the main switch on '0' (Off) position;

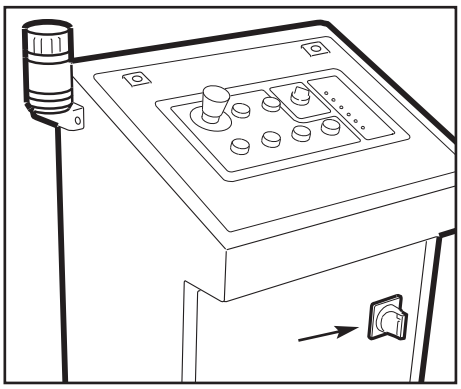

Disconnect the plug from the mains.

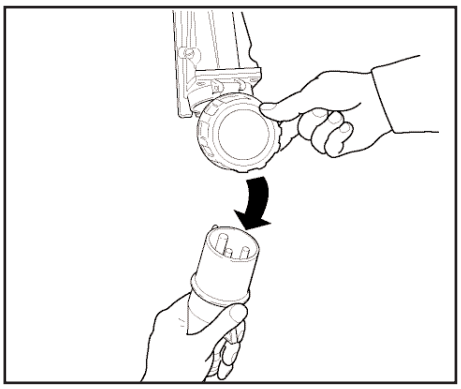

During the maintenace operations only the operator performing the maintenance must work on the machine.
At the end of every maintenance operation check that all securities and the safety guards are working properly.

13.4 SECURITIES CH ECK-UP

1 Tape units blade guards;
2 Lockable emergency stop push-buttons;
3 Rigid protection plate mounted on the side drives;
4 Safety guards;

13.5 MACHINE LUBRICATION

Lubricate **quarterly** with grease/Metal/metal (see paragraph **13.6**):

1 Slide cross bar ball guides for side drives (grease nipples on the blocks) ;

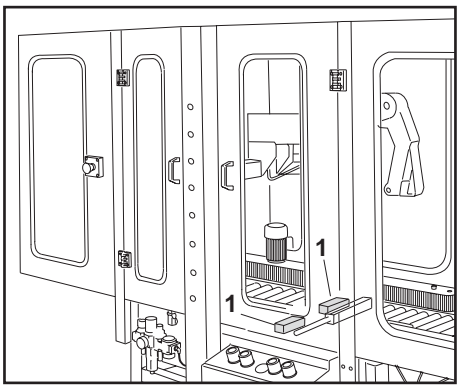

2 Columns-upper unit cross bar ball guides (grease nipples on the blocks);

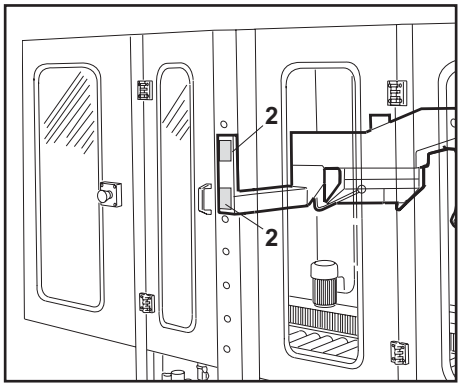

3 Side compression rollers ball guides (grease nipples on the blocks).

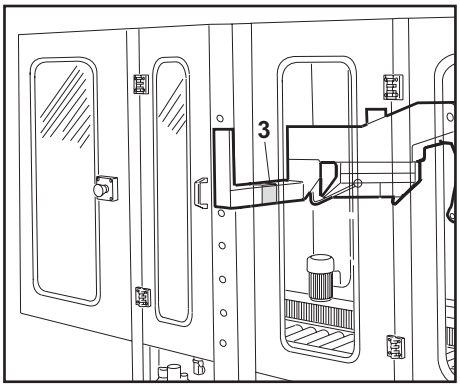

13.6 SUGGESTED PRODUCTS FOR LUBRICATION

GREASE TYPE:
METAL/METAL: B.C.190 HEAVY DUTY (otherwise grease for chains and bearings)
METAL/PLASTIC: PLATE MASTER M+L (molybdenum grease and PTFE for plastic and metallic materials)
OIL TYPE:
regular lubricating oil or general purpose spray lubricant.

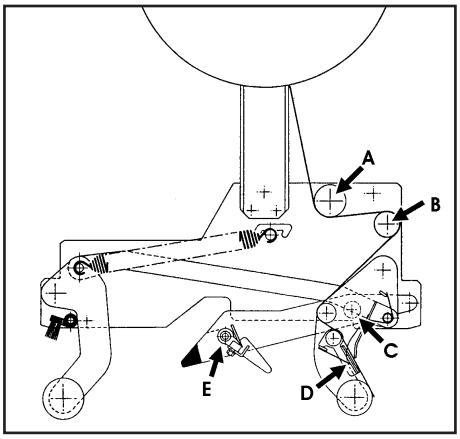

13.7 LUBRICATION OF THE TAPING UNIT

Lubricate monthly with oil the points shown on Picture.

A spring holder pin
B spring tension pin
C roller shaft
D cutter hinge
E blade guard pin

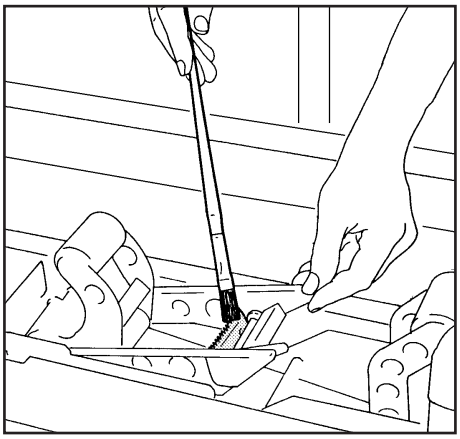

13.8 BLADE CLEANING

Skill ***2*** operator
Lift the blade guard and clean the blade by using a brush (with a long handle) and some oil. The oil prevents the adhesive clotting.

13.9 BLADE REPLACEMENT

Skill **2** operator
- Lift the blade guard as shown in Picture
- Release the screws.
- Remove the blade.

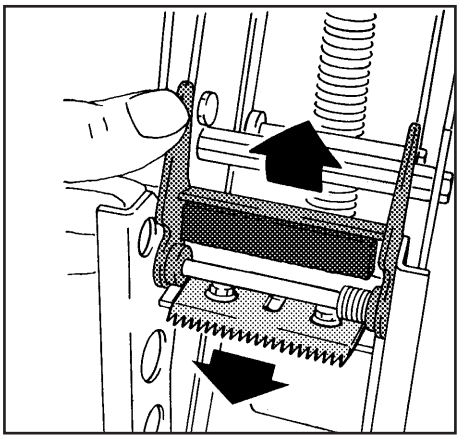

WARNING!
Very sharp blade.
Any error may lead to bad injuries.

- Insert the new blade paying attention to the position of its sharp side.
- Fix the screws.
- Release the guard..

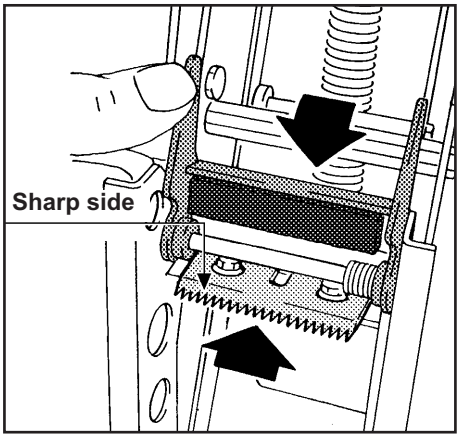

13.10 SIDE DRIVE BELTS REPLACEMENT

Skull **2** operator**.**

Notice: in order to convey teh case correctly, it is necessary that both belts have the same level of wear.

Remove the plug from the mains and take the air off the circuit.

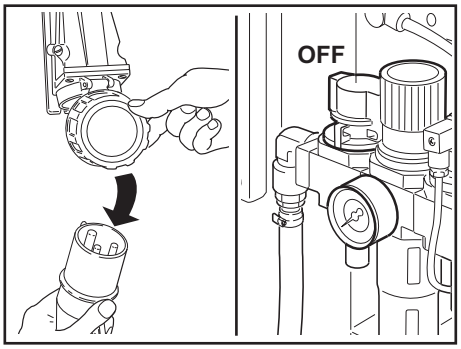

Disconnect the Klingel plug from the socket.

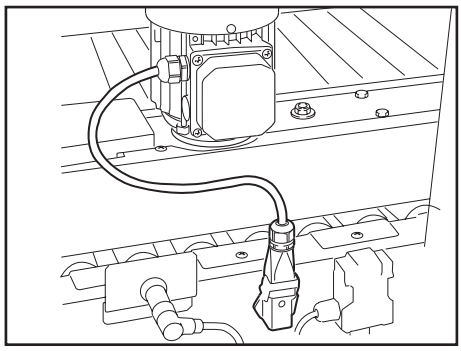

Losse and remove the bolts that fix the connecting rod to the side flap folder.

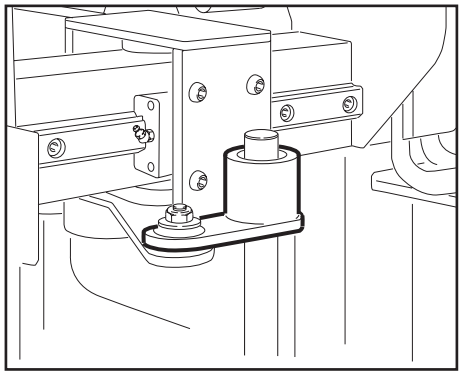

Remove the side drives locking screws.

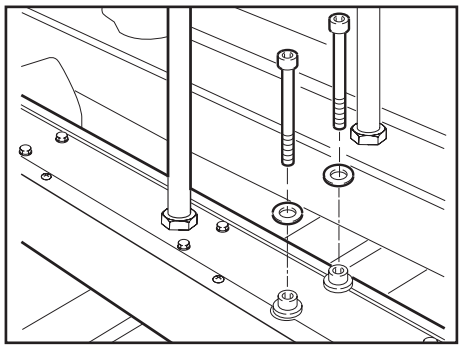

Remove the side drive and place it on a working table.

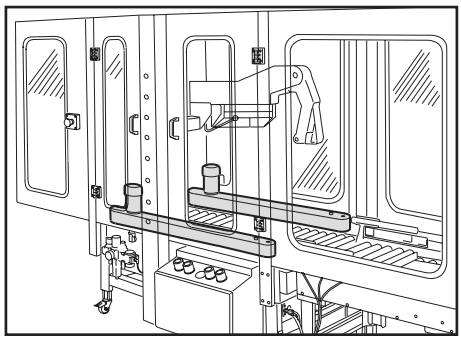

Remove the lockung screws and the protection covers.

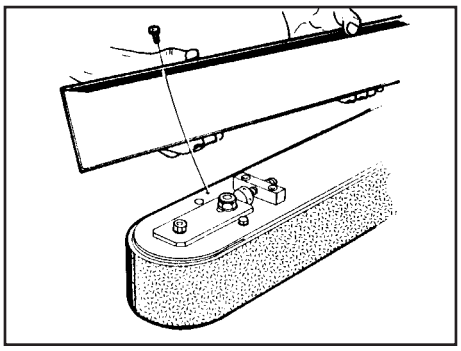

Loosen the tensioning screws.

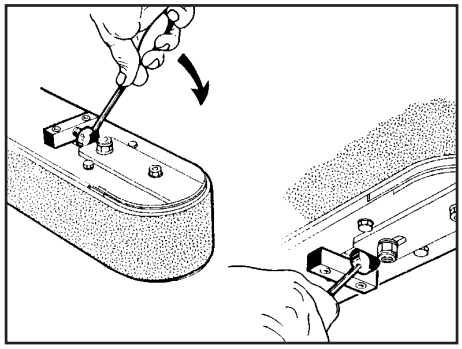

Release the nut of the tensioning plate.

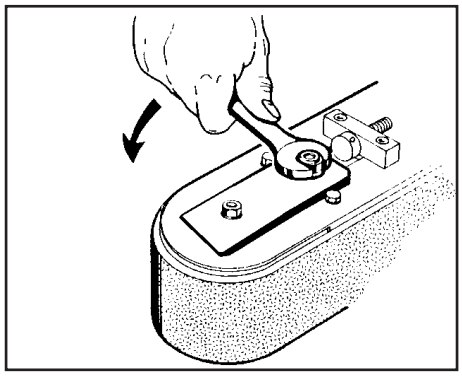

Remove and replace the drive belt.

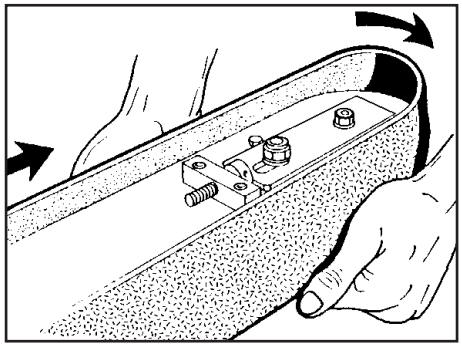

WARNING!
Before setting the new belt, check the wear of the orange plastic rings on the drive pulleys: replace them if they are worn out.

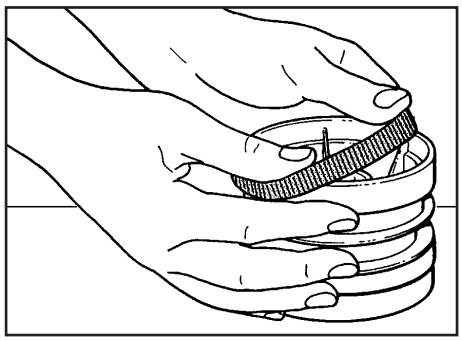

13.11 ADJUSTMENT OF THE BELTS TENSION

Check the tension of the belt by pulling it outwards in the middle.
A force of 3,5 kg should produce a gap of 25 mm (1 inch) between the belt and the frame.

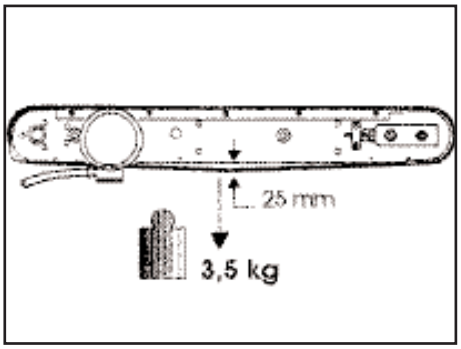

13.12 ADJUSTMENT OF THE UPPER ASSEMBLY DESCENT BRAKE

The brake adjustment must be done when the upper group does not stay in position and tends to come down further.

With the machine working push the stop emergency buttom or open the safety guarding; check that the top taping head frame remains in the correct position; eventually proceed to an adjustment as it follows.

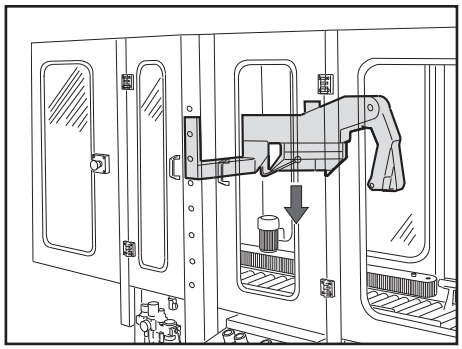

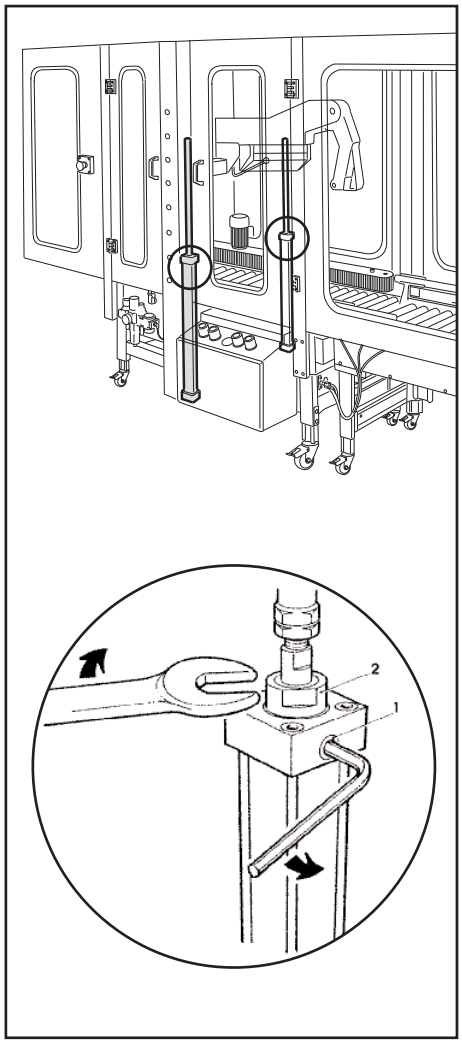

-Loosen the screw **1**;
-Turn the ring nut 2 clockwise ;
-Tighten the screw **1**.

Note: for additional informations check the documentation of the manufacturer attached to the present manual.

<u>Do this operation on both cylinders.</u>

Reset the machine for normal operation and re-check.

LIST OF THE MAINTENANCE OPERATIONS CARRIED OUT ON THE MACHINE

Date	Description of operation

14-ADDITIONAL INSTRUCTIONS

14.1 INSTRUCTIONS FOR SCRAPPING AND DISPOSAL OF THE MACHINE

The machine is made of the following materials:
- steel frame
- nylon conveyor rollers
- PVC drive belts
- nylon pulleys

In order to dispose of the above materials please comply with the law in force in your country.

14.2 INSTRUCTIONS ON EMERGENCY SITUATIONS

In case of danger/fire:
disconnect the electric power.

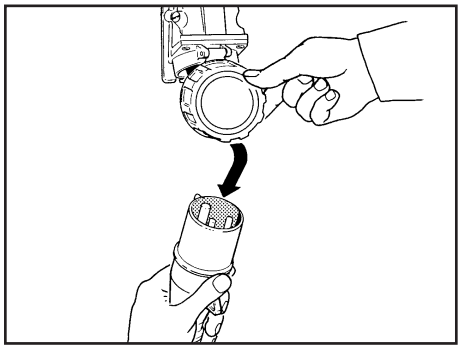

FIRE
In case of fire use an extinguisher containing CO2.

DO NOT use water.

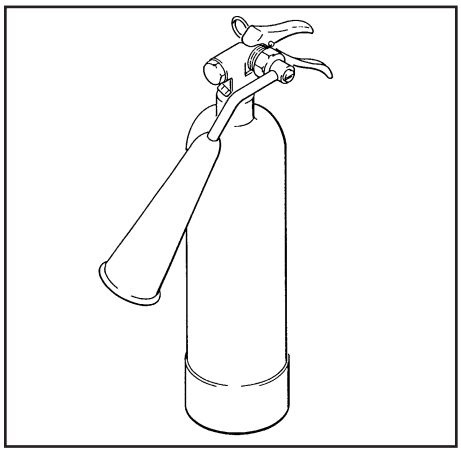

15-ENCLOSURES

15.1 STATEMENT OF CONFORMITY

to the Directives on Machinery EEC 98/37, 91/368, 93/44 and 93/68.

15.2 SAFETY LABELS

The safety labels are important for the correct use of the machine.
In case any label is damaged or removed, it is responsibily of the user to replace it immediately.

15.3 EMISSIONS OF RADIATIONS, GAS, VAPOURS AND DUST

Nothing to report

15.4 ELECTRIC TESTS

Electric tests:
1 - Continuity of the ground circuit
2 - Insulation resistance
3 - High voltage insulation
Reference: EN 60204-1 Section 20.2, 20.3, 20.4

16-DRAWINGS AND DIAGRAMS

16.1 PNEUMATIC SYSTEM DIAGRAM

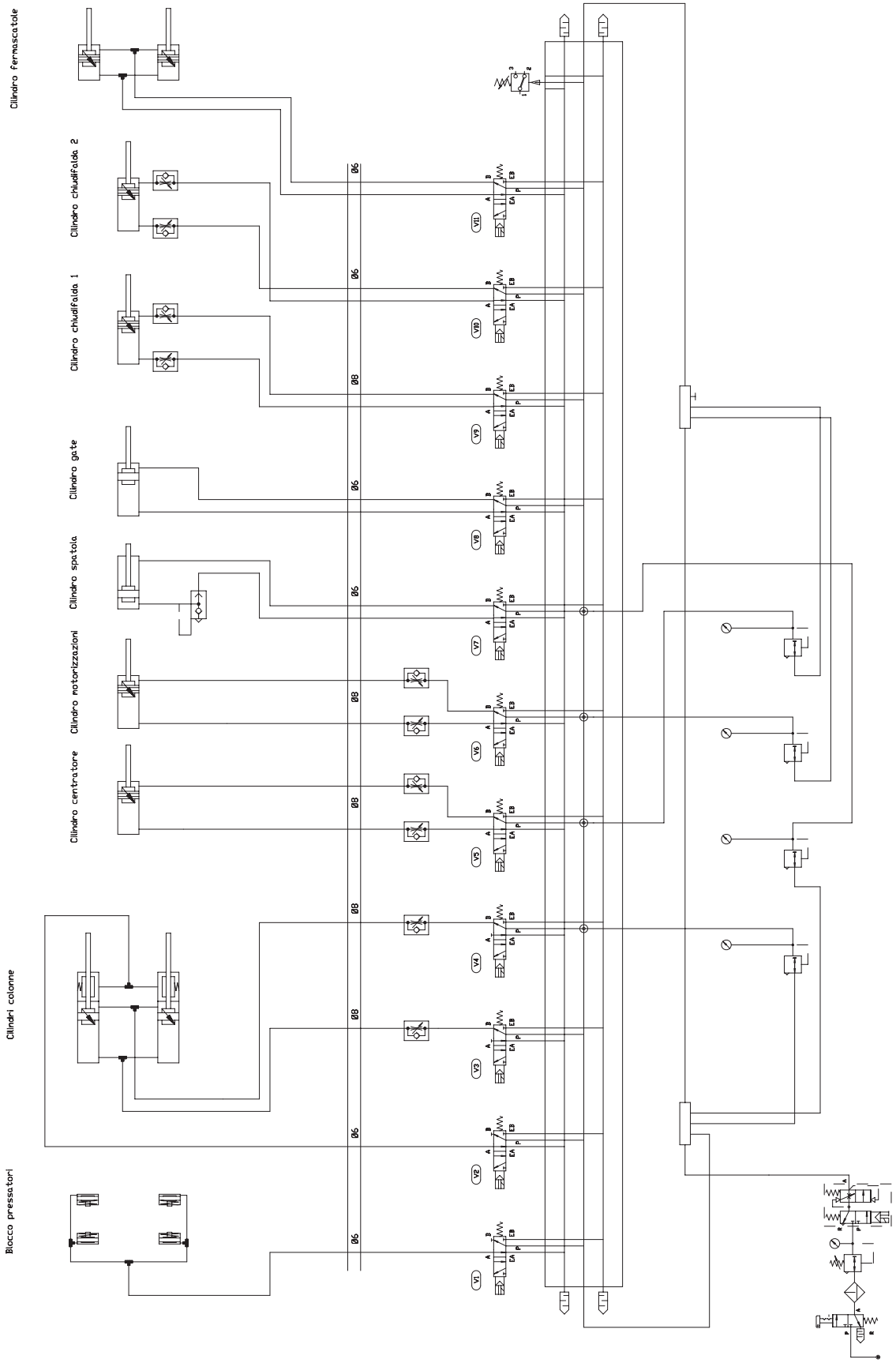

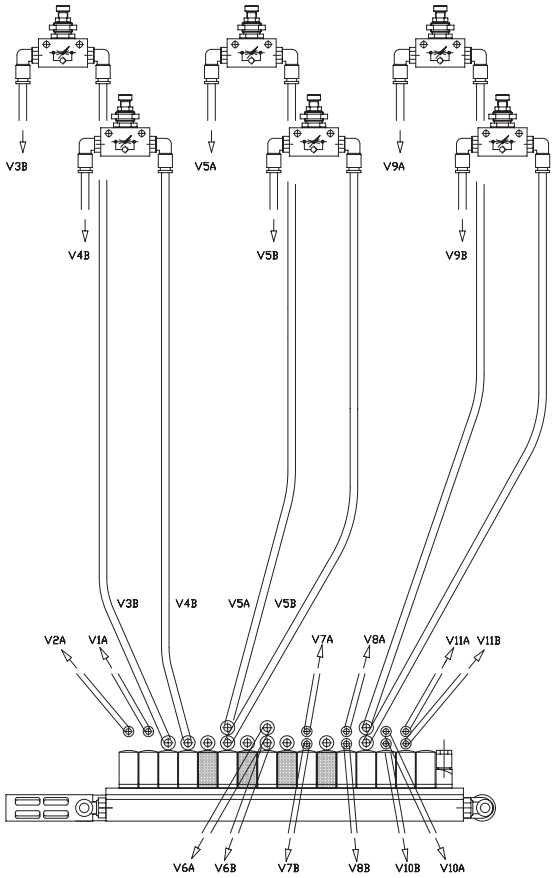
V3B
V5A
V9A
V4B
V5B
V9B
V3B
V4B
V5A
V5B
V2A
V1A
V7A
V8A
V11A
V11B
V6A
V6B
V7B
V8B
V10B
V10A

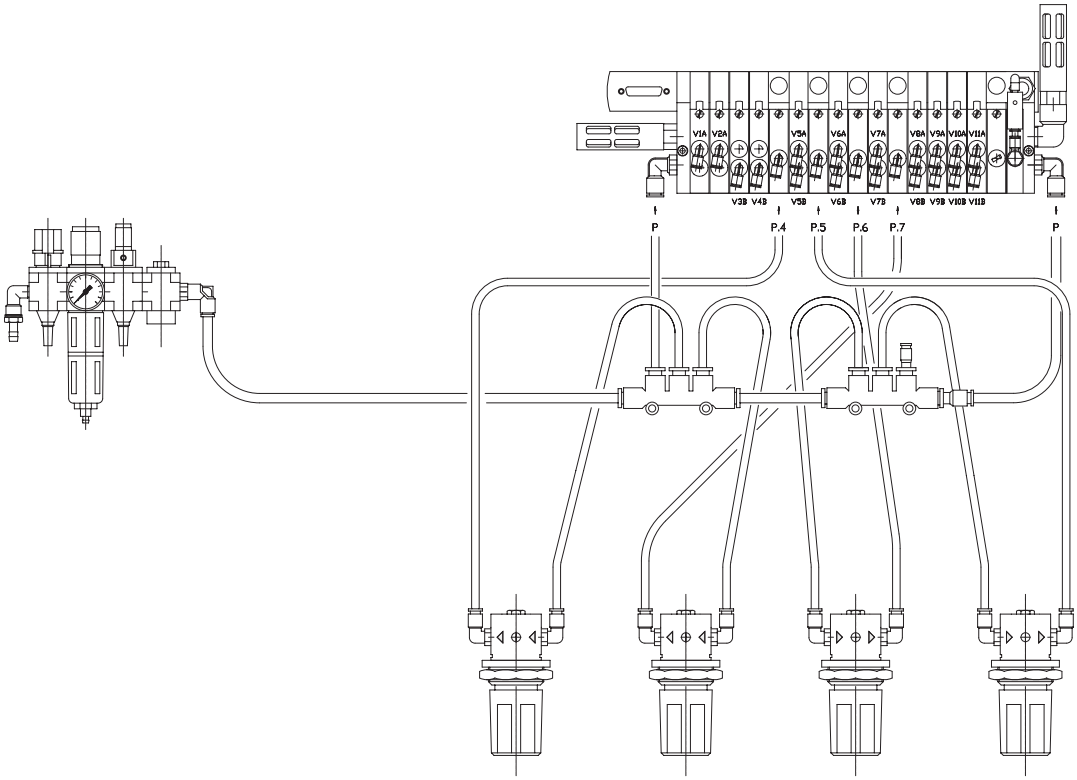
V1A
V2A
V3A
V6A
V7A
V8A
V9A
V10A
V11A
V3B
V4B
V5B
V6B
V7B
V8B
V9B
V10B
V11B
P
P.4
P.5
P.6
P.7
P

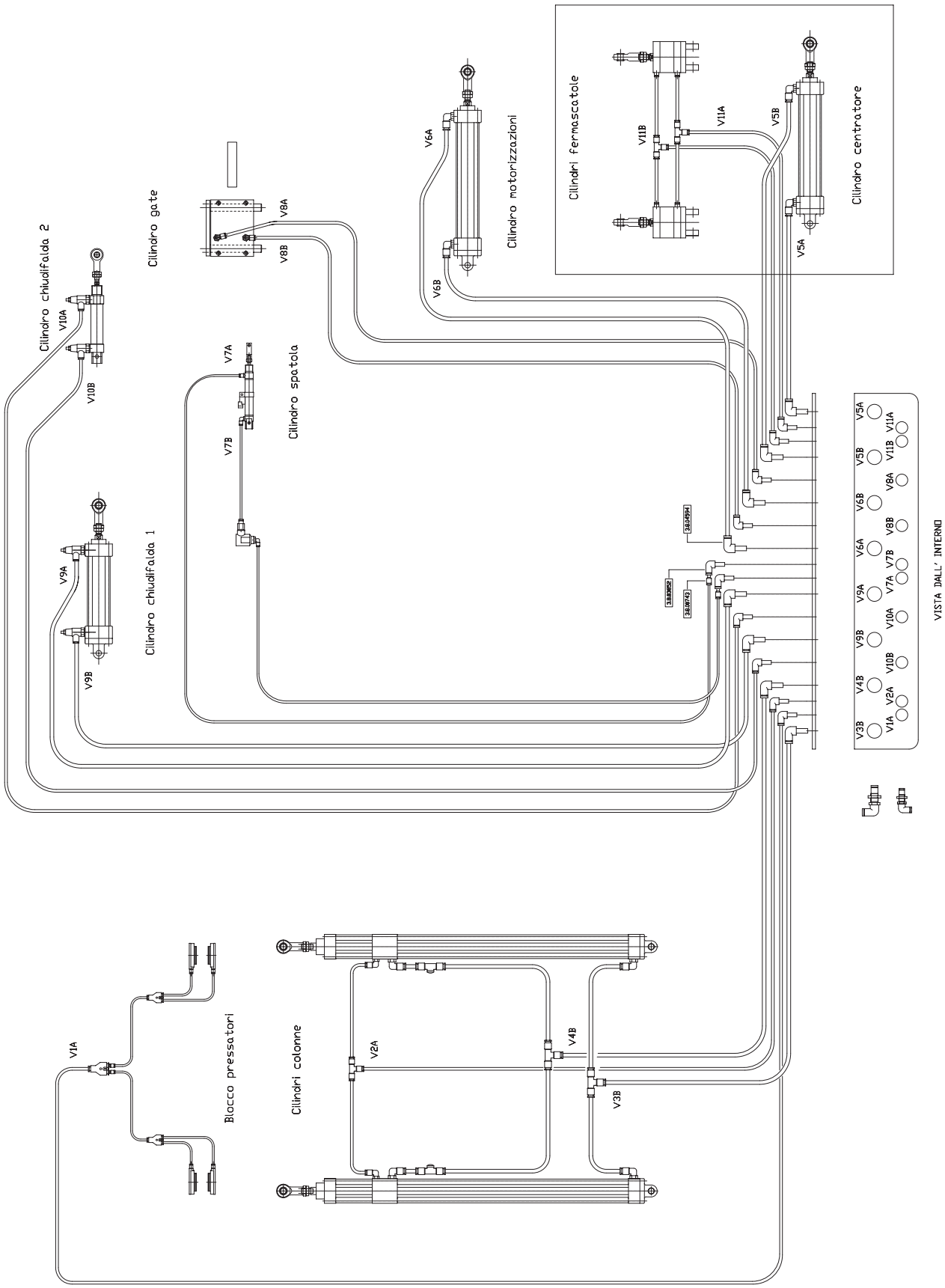
Cilindro chiudifalda 2
V10A
V10B
Cilindro gate
V8A
V8B
V6A
V6B
Cilindro motorizzazioni
Cilindri fermascatole
V11B
V11A
V5B
V5A
Cilindro centratore
V7A
V7B
Cilindro spatola
V9A
V9B
Cilindro chiudifalda 1
V1A
Blocco pressatori
Cilindri colonne
V2A
V4B
V3B
VISTA DALL' INTERNO

CATALOGO PEZZI DI RICAMBIO
COME ORDINARE

Per ordinare i pezzi di ricambio si prega di indicare nell'ordine:
MODELLO ESATTO DELLA MACCHINA/NUMERO DI MATRICOLA DELLA MACCHINA/NUMERO DELLA FIGURA DEL CATALOGO RICAMBI IN CUI COMPARE IL PEZZO RICHIESTO/NUMERO DI POSIZIONE DEL PEZZO RICHIESTO NELLA FIGURA/NUMERO DI CODICE DEL PEZZO/DESCRIZIONE DEL PEZZO/QUANTITÁ DESIDERATA

ATTENZIONE: LA MACCHINA VIENE COSTANTEMENTE MIGLIORATA DAI PROGETTISTI, E IL CATALOGO DEI RICAMBI SUBISCE PERIODICI AGGIORNAMENTI. É INDISPENSABILE CHE OGNI ORDINE DI PARTI DI RICAMBIO MENZIONI IL NUMERO DI MATRICOLA DELLA MACCHINA, LEGGIBILE SULLA TARGHETTA METALLICA DI IDENTIFICAZIONE DELLA MACCHINA.
Il costruttore si riserva la facoltà di apportare modifiche alle macchine senza preavviso.

SPARE PARTS CATALOGUE
HOW TO ORDER

When ordering spare parts, please define each part as follows:
MODEL OF MACHINE/SERIAL NUMBER OF MACHINE/NUMBER OF THE FIGURE IN THE SPARE PARTSCATALOGUE IN WHICH THE REQUESTED PARTS APPEARS/NUMBER OF POSITION OF THE REQUESTED PART IN THE FIGURE/PART NUMBER/DESCRIPTION/ DESIRED QUANTITY

WARNING: THE MACHINE IS CONSTANTLY REVISED AND IMPROVED BY OUR DESIGNERS. THE SPARE PARTS CATALOGUE IS ALSO PERIODICALLY UPDATED. IT IS VERY IMPORTANT THAT ALL THE ORDERS OF SPARE PARTS MAKE REFERENCE TO THE SERIAL NUMBER OF THE MACHINE, WHICH IS PUNCHED ON THE METAL NAME PLATE ON THE MACHINE.
The manufacturer reserves the right to modify the machine at any time without notice.

CATALOGUE PIECES DETACHEES
COMMENT COMMANDER

Pour commander les pièces de rechange, il est nécessaire d'indiquer dans l'ordre:
MODELE EXACTE DE LA MACHINE/NUMÉRO D'IDENTIFICATION DE LA MACHIN/NUMÉRO DU TABLEAU DANS LE CATALOGUE PIECES DE RECHANGE DANS LEQUEL FIGURE LA PIECE DEMANDÉE/NUMÉRO DE POSITION DANS LE CATALOGUE DE LA PIECE DEMANDÉE CODE DE LA PIECE/DESCRIPTION/QUANTITÉ DÉSIRÉE

ATTENTION;:La machine est améliorée constamment par des projetteurs, et le catalogue des pièces de rechange subit périodiquement des mises à jour. Il est donc indispensable, que chaque commande de pièces de rechange mentionne le numéro d'identification de la machine, lisible sur la plaque métallique d'identification de la machine.
Le constructeur se réserve le droit d'apporter des modifications aux machines sans préavis aucun.

ERSATZTEILE-KATALOG
ERSATZTEIL-BESTELLUNG

Für die Bestellung der Ersatzteile , müssen folgende Informationen mitgeteilt werden
GENAUES MASCHINENMODELL/
MATRIKELNUMMER DER MASCHINE/BILDNUMMER DES ERSATZTEILEKATALOGES, AUF DEM DAS GEFRAGTE TEIL BGEBILDET IST/ POSITIONSNUMMER DES GEFRAGTEN TEILES AUF DEM BILD/BESTELLNUMMER DES ERSATZTEILE/BESCHREIBUNG DES ERSATZTEILES/ GEWÜNSCHTE MENGE

ACHTUNG: DIE QUALITÄT UND SICHERHEIT DER MASCHINE WIRD VON DER ENTWICKLUNGSARBEIT STÄNDIG VERBESSERT. DER ERSATTEILE KATALOG WIRD PERIODISCH AKTUALISIERT. ES IST DAHER NOTWENDIG, DAß ALLE ERSATZTEIL-BESTELLUNGEN IMMER DIE MATRIKELNUMMER ERWÄHNEN, DIE AUF DEM METALLSCHILD DER MASCHINE STEHT.
Der Hersteller behält sich die Möglichkeit vor, eventuelle Änderungen an der Maschine ohne Vorabinformation durchzuführen.

CATALOGO PIEZAS DE RECAMBIO
COMO PEDIR

Para pedir las piezas de recambio se ruega indicar en el pedido:
MODELO EXACTO DE LA MÁQUINA/ NÚMERO DE MATRÍCULA DE LA MÁQUINA/NÚMERO DE LA FIGURA DEL CATÁLOGO RECAMBIOS EN LOS QUE APARECE LA PIEZA PEDIDA/ NÚMERO DE POSICIÓN DE LA PIEZA SOLICITADA EN LA FIGURA/ NÚMERO DE CÓDIGO DE LA PIEZA/ DESCRIPCIÓN DE LA PIEZA/CANTIDAD DESEADA

ATENCIÓN!: LA MÁQUINA ES CONSTANTEMENTE MEJORADA POR LOS PROYECTISTAS, POR LO QUE EL CATÁLOGO DE RECABIOS ES ACTUALIZADO PERIÓDICAMENTE. ES INDISPENSABLE QUE TODOS LOS PEDIDOS DE PIEZAS DE RECAMBIO HAGAN MENCI DEL NÚMERO DE MATRÍCULA DE LA MÁQUINA, LEGIBLE EN LA PLACA METÁLICA DE IDENTIFICACIÓN DE LA MÁQUINA.
El fabricante se reserva la facultad de aplicar modificaciones a las máquinas sin previo aviso.

SIAT S.p.A. - Via Puecher, 22 - 22078 TURATE (CO) ITALY - P.O. BOX 1
Tel. 02-964951 - Telefax 02-9689727
http://www.siat.com - E-Mail: siat@siat.com

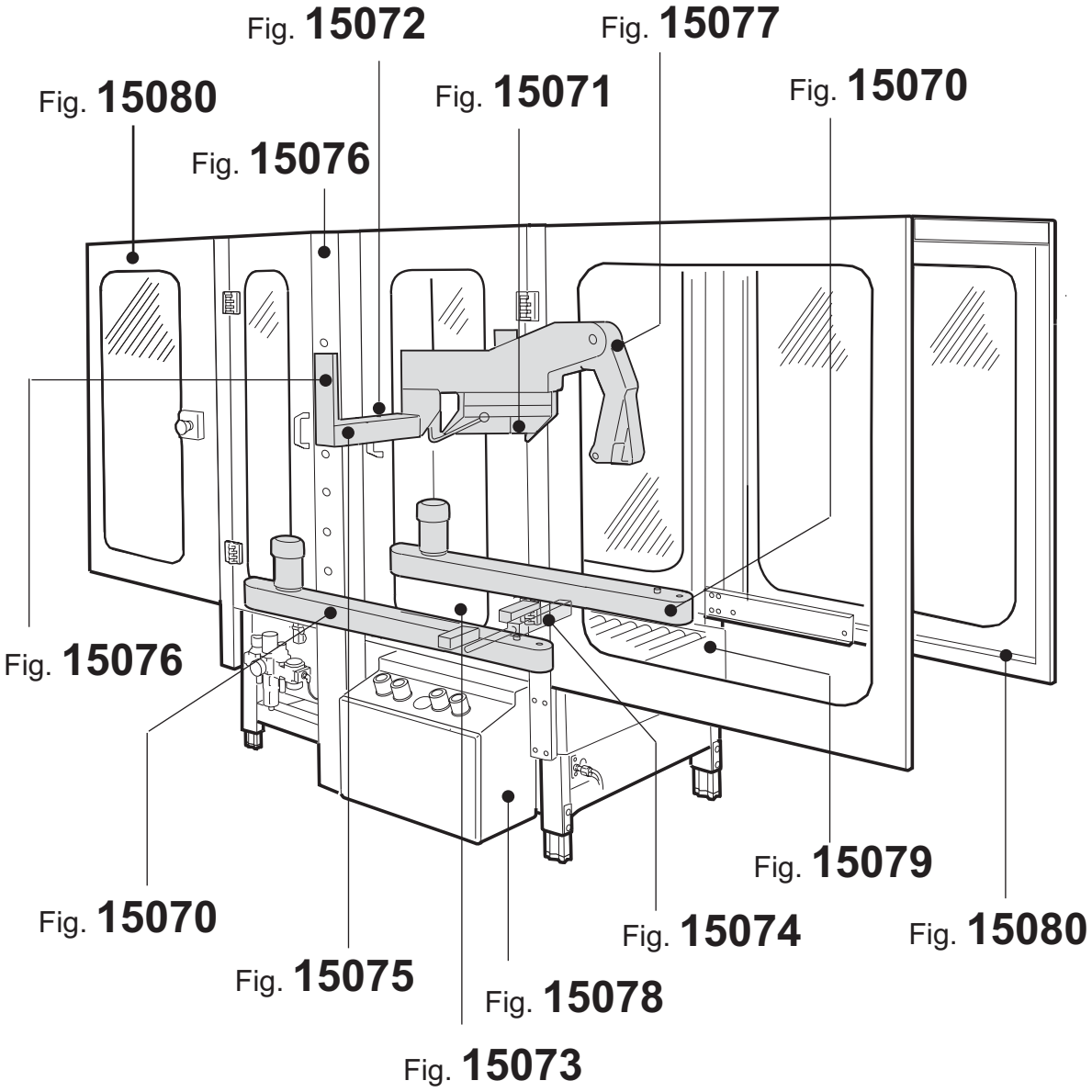
Fig. 15072
Fig. 15077
Fig. 15080
Fig. 15071
Fig. 15070
Fig. 15076
Fig. 15076
Fig. 15079
Fig. 15070
Fig. 15074
Fig. 15080
Fig. 15075
Fig. 15078
Fig. 15073

Fig. 15070 MOTORIZZAZIONI S7810000300A SM44 HD NASTRATRICE

Pos.	Q.tà	Codice	Descrizione
1	1	S4710004200A	MOTORIZZAZIONE DX 220/240-380/415 V 50 Hz
2	1	S4510005447A	GUIDA INFERIORE DX MOTOR. ASS.
3	1	S4510005247A	GUIDA SUPERIORE DX MOTOR. ASS.
4	6	S330596093Z	DISTANZIALE ESAGONALE 10x81 SM11 ZINC.
5	17	S340002193Z	VITE TE M6x12 ZINCATA
6	16	S340017593Z	RONDELLA PIANA PER VITE M6 ZINC.
7	4	S330627893Z	VITE SPECIALE M6
8	1	SBA0001152	PULEGGIA MOTRICE POST. ASS. H=75
9	1	SBA0001154	PULEGGIA MOTRICE ASS. C/ANELLI
10	2	S310054048Z	ANELLO PER PULEGGIA
11	4	S4603370ZZZ	FLANGIA COMPL. DI CUSCIN.
12	1	S3400281ZZZ	LINGUETTA 5x5x12
13	2	S340051693Z	VITE M5x12
14	2	S330595193Z	RONDELLA 5,5X/20X4
15	1	SBA0001151	PULEGGIA MOTRICE DENTATA ASS. H=75
16	1	S330595193Z	RONDELLA 5,5X/20X4
17	1	S340051693Z	VITE M5x12
21	1	S3400741ZZZ	LINGUETTA 4x4x10
22	1	S331092092Z	PIGNONE 3/8" Z=13 x MOTORIZZAZ. SM11/XL
23	1	S460425600A	PULEGGIA PD30-L075F ASSEMBLATA
24	1	S4704051ZZZ	GALOPPINO ASS. AM11 12AF XL
25	1	S330906792Z	GALOPPINO TENDICINGHIA
26	1	S330906892Z	PERNO PER GALOPPINO
27	1	S3400017ZZZ	CUSCINETTO 60042RS NTN SKF
28	1	S340006892Z	ANELLO DI ARRESTO PER ALBERO 20 BR.
29	1	S340044592Z	ANELLO DI ARRESTO PER FORO 42 BR.
30	2	S340028393Z	DADO AUTOBLOCCANTE M8 ZINCATO
31	2	S340065593Z	RONDELLA TRIPLA x VITE M8 ZINC.
32	1	S4704052ZZZ	PULEGGIA DOPPIA ASS. AM11-48
33	1	S4503371ZZZ	PULEGGIA DI RINVIO SM11
34	1	S3400193ZZZ	CUSCINETTO 6000 2RS
35	1	S3400095A	CUSCINETTO 6203 2RS
36	1	S330596292Z	PERNO PER PULEGGIA DI RINVIO
37	1	S340018792Z	ANELLO DI ARRESTO 10 DIN 471 BRUN.
38	1	S340002693Z	VITE TE M6x16 ZINCATA
39	3	S340003393Z	RONDELLA TRIPLA PER VITE M6 ZINCATA
40	1	S3402679ZZZ	CINGHIA DENTATA 240L075
41	1	S3401009ZZZ	CINGHIA TRASCIN. 75x2956+-3,5
42	1	S4704053ZZZ	PULEGGIA FOLLE ASS. SM11-48
43	1	S4601730ZZZ	PULEGGIA FOLLE COMPL.
44	1	S330596492B	PERNO PER PULEGGIA FOLLE
45	1	S340010492Z	ANELLO ARRESTO PER ALBERO /25 DIN 471
46	2	S320428047Z	PIASTRA TENDICINGH. MOTORIZZAZ. SM
47	2	S340032193Z	VITE TE M10x20
48	2	S340021993Z	RONDELLA PIANA PER VITE M10 ZINC.
49	1	S3311650ZZZ	BLOCCHETTO PER MOTORIZZ. F144
50	4	S340016093Z	VITE TCEI M6x20 ZINCATA
51	2	S331163893Z	VITE SPEC. PER TENSIONAMENTO F144
52	1	S3101491ZZZ	DISTANZIALE x MOTORI SM/XL/3M
53	4	S340005593Z	VITE TSVEI M5x20 ZINCATA
54	4	S350050693Z	RONDELLA FISSAGGIO MOTORI
55	1	S330962392Z	PULEGGIA DENTATA
56	1	S340038892Z	GRANO EIPP M5x6 BRUN.
57	1	S3401593ZZZ	CINGHIA DENTATA 160XL050

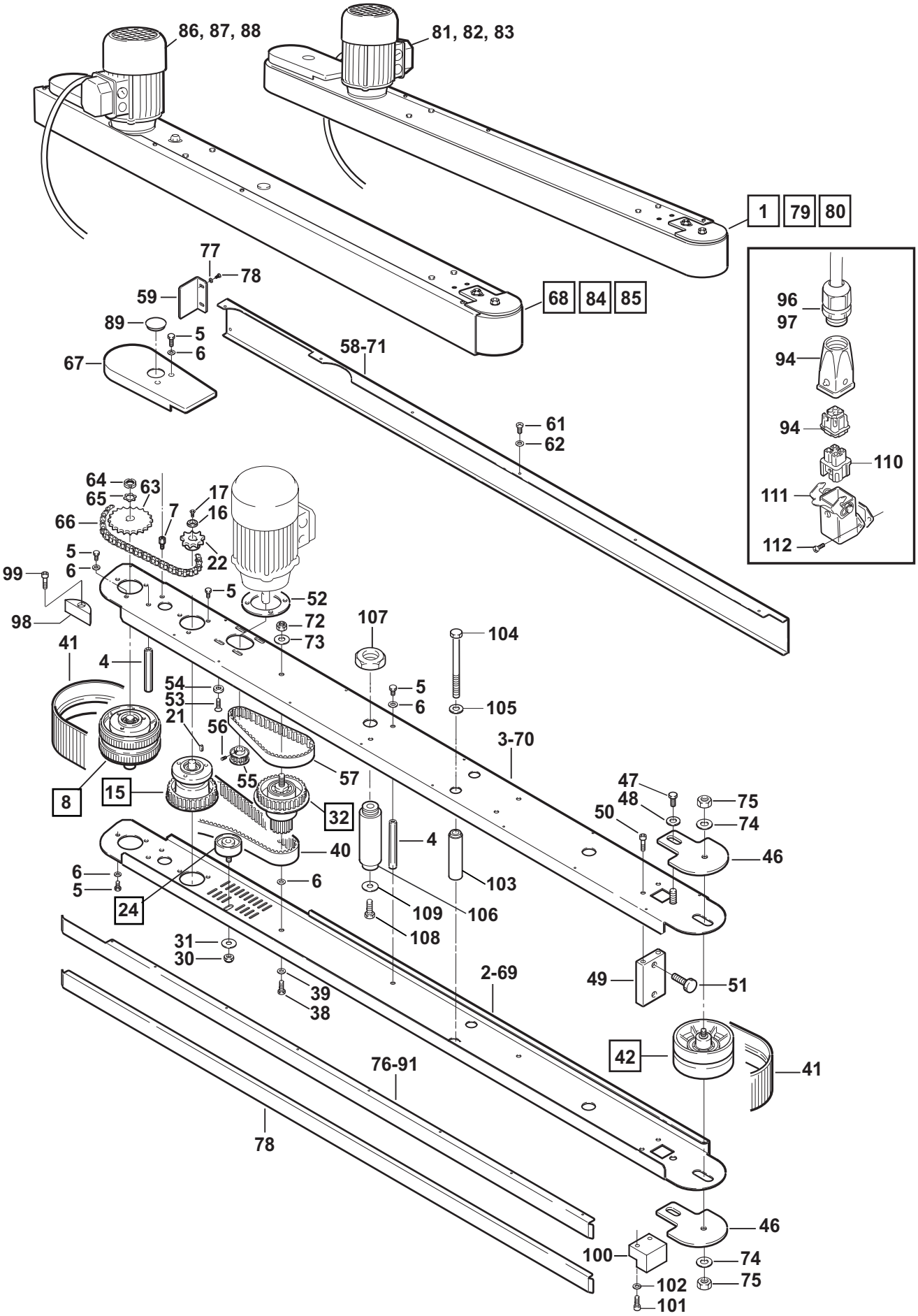

SM44 HD

Set. 2007

Fig. **15070**

Fig. 15070 MOTORIZZAZIONI S7810000300A SM44 HD NASTRATRICE

Pos.	Q.tà	Codice	Descrizione
58	1	S4510004340A	CARTER PER MOTORIZZAZIONE DX
59	2	S321628440A	PROTEZIONE POS. MOTORIZZAZIONI
61	2	S340022893Z	VITE TCBCR AUTOF. 8Px13 ZINCATA
62	16	S340004393Z	RONDELLA PIANA PER VITE M4 ZINC.
63	1	S330655192Z	PIGNONE P=3/8" Z=28 SM BR.
64	1	S3400094ZZZ	GHIERA KM2
65	1	S3400913ZZZ	ROSETTA DI SICUREZZA MB2
66	1	S3401851ZZZ	CAT RING CHIUSO 3/8" 52 PASSI COMP. GIU.
67	1	S310068905Z	CARTER CATENA
68	1	S4710004300A	MOTORIZZAZIONE SX 220/240-380/415 V 50 Hz
69	1	S4510005547A	GUIDA INFERIORE SX MOTORIZZ. AS.
70	1	S4510005347A	GUIDA SUP. SX MOTORIZZAZIONI
71	1	S4510004440A	CARTER PER MOTORIZZAZIONE SX
72	2	S340028393Z	DADO AUTOBLOCCANTE M8 ZINCATO
73	2	S340065593Z	RONDELLA TRIPLA PER VITE M8 ZINCATA
74	2	S340012393Z	RONDELLA PIANA PER VITE M8 ZINCATA
75	2	S340000393Z	DADO M8 ZINCATO
76	1	S3210018300A	SCIVOLO SUPERIORE DX
77	4	S340006193Z	RONDELLA PIANA PER VITE M5 ZINCATA
78	1	S3210018200A	SCIVOLO INFERIORE
79	1	S4710004400A	MOTORIZZAZIONE DX 200 V 50/60 Hz-220 V 60 Hz 3PH
80	1	S4710004600A	MOTORIZZAZIONE DX 440 V 50 Hz 3PH
81	1	S3803441ZZZ	MOTORE DX H63A4 200V/240 V 380/415 50 Hz 0.13 kW
82	1	S3803443ZZZ	MOTORE DX H63A4 200V 50/60 Hz 200 V 60 Hz 3F 0.12 kW
83	1	S3801446ZZZ	MOTORE DX H63A4 260V/440 V 50 Hz 3F 0.13 kW
84	1	S4710004500A	MOTORIZZAZIONE SX 200 v 50/60 Hx - 220 V 60 Hz 3PH
85	1	S4710004700A	MOTORIZZAZIONE SX 440 V 50 Hz 3PH
86	1	S3803441ZZZ	MOTORE SX H63A4 200V/240 V 380/415 V 50 Hz 0.13 kW
87	1	S3803443ZZZ	MOTORE SX H63A4 200 V 50/60 Hz 220 V 60 Hz 3F 0.13 kW
88	1	S3801446ZZZ	MOTORE SX H63A4 260V/440 V 50 Hz 3F 0.13 kW
89	1	SCA0000213	TAPPO IN PLASTICA DP-1375
90	1	S321628098A	SCIVOLO GUIDA INF. MOTORIZZAZ.
91	1	S3210018400A	SCIVOLO SUPERIORE SX
94	1	S3801458ZZZ	CUSTODIA VOL. USCITA VERTI.PG11 105121
95	1	S3801455ZZZ	INSERTO MASCHIO 4 POLI 3P+T
96	2	S3802139ZZZ	BOCCHETTONE SKINTOP ST11
97	3,4 m	SCC0000518	CAVO OLFLEX-CLASSIC 400 P 4G 1.5 MMQ
98	2	SBC0003252	TENDICINGHIA SET AUMENTO VELOCITA'
99	2	S340014193Z	VITE TCEI M5x25 ZINCATA
100	2	S3110001100A	PATTINO SCORRIMENTO MOTORIZZAZIONI SM44
101	4	S340002093Z	VITE TCEI M6x30 ZINCATA
102	4	S340017593Z	RONDELLA PIANA PER VITE M6 ZINCATA
103	2	S3310004693A	DISTANZIALE FISSAGGIO MOTORIZZAZIONI
104	4	S340206393Z	VITE TE M10x110
105	4	S330039593Z	RONDELLA 10,5/26x4 ZINCATA
106	2	S330748593Z	CANNOTTO FILETTATO SM44/12RF
107	2	S331121093Z	DADO SPEC. FIL. /22x1,5 H=8 SM44/SM44-PLC/
108	2	S340032493Z	VITE TE M8x16
109	1	S340065593Z	RONDELLA TRIPLA x VITE M8
110	2	S3801456ZZZ	INSERTO FEMMINA 3P+T
111	2	S3801459ZZZ	CUSTODIA PANNELLO C/USCITA LAT 104235
112	4	S345001193Z	VITE TCBRC M3x10 ZINCATA

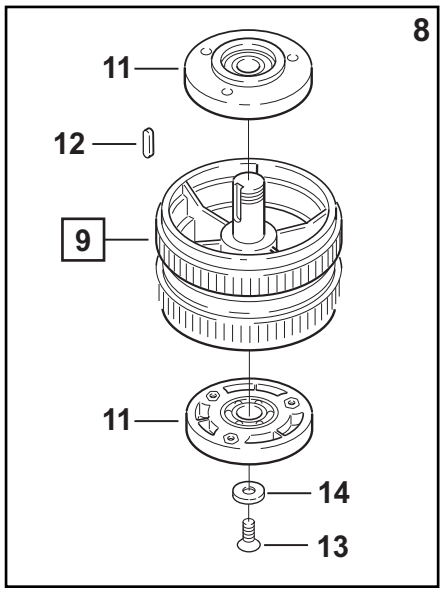
8
11
12
9
11
14
13

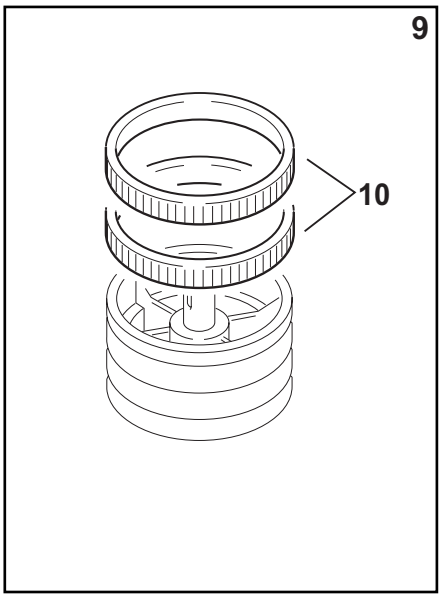
9
10

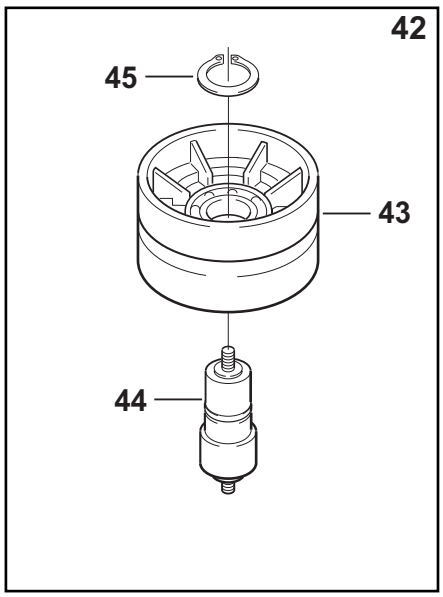
42
45
43
44

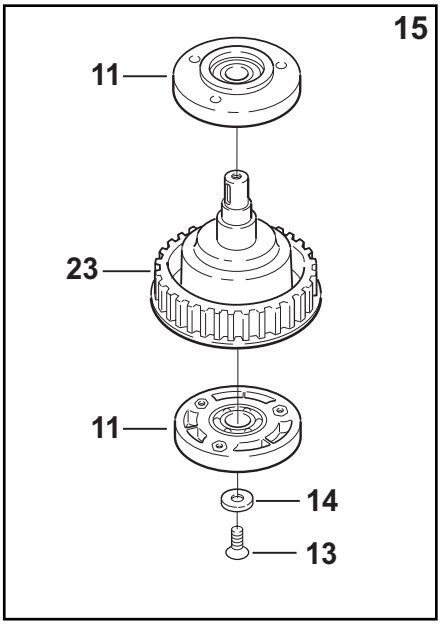
15
11
23
11
14
13

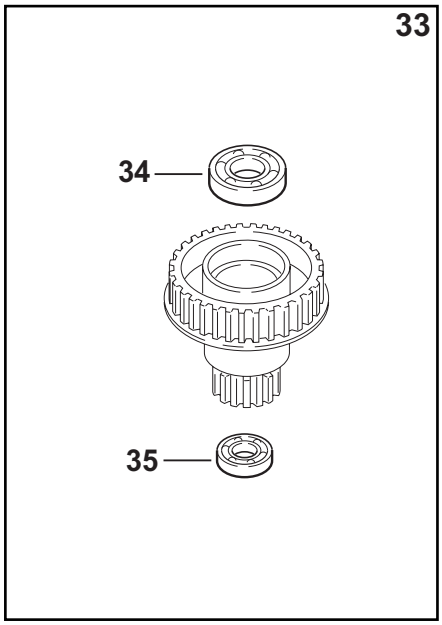
33
34
35

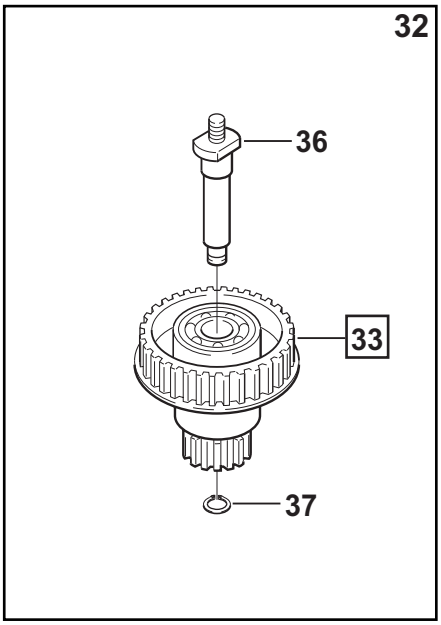
32
36
33
37

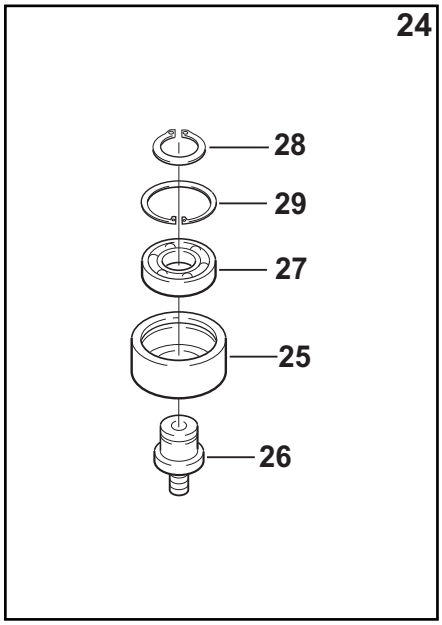
24
28
29
27
25
26

Fig. 15071 POSIZIONATORE ALTEZZA S7810000300A SM44 HD NASTRATRICE

Pos.	Q.tà	Codice	Descrizione
1	1	S440675198A	SUPPORTO GUIDA SCATOLE DX ASS. 800rf/3M MOD, 29700
2	1	S320812198A	SUPPORTO GUIDASCATOLA SX 800 rf/3M MOD. 29700
3	1	S450528798Z	POSIZIONATORE ALTEZZA CON CUSCINETTO
4	1	S3401147ZZZ	CUSCINETTO 618/9 SM44
5	1	S331035493Z	FORCELLA PER CILINDRO SM44/PLC
6	1	S330789293Z	PERNO PER FORCELLA 6/14 SM44 ZI.
7	2	S340083992Z	ANELLO DI ARRESTO 4 DIN 6799 BR.
8	2	S330789493Z	DISTANZIALE PER CILINDRO/16 SM44 ZI
9	1	S440292198Z	GUIDASCATOLE COMPL. INOX SM44
10	2	S330758593Z	DISTANZIALE PER RIB. GUID. SM44 ZI
11	2	S330758403Z	DISTANZIALE PER GUIDAS. SM44 ZIN.
12	2	S340064893Z	VITE TE M6x40 ZINCATA
13	2	S340025893Z	DADO AUTOBLOCCANTE BASSO M6
14	1	S331125493Z	VITE SPECIALE M5 x SM44/800rf
15	1	S340025993Z	DADO AUTOBLOCCANTE M5 ZINCATO
16	2	S320812498A	RONDELLA PER CUSCINETTO POSIZ. 800rf/3M MOD. 29700
17	3	S340002893Z	VITE TSVCR M4x8 ZINCATA
18	6	S340057793Z	VITE TCEI M6x16 ZINCATA
19	6	S340017593Z	RONDELLA PIANA PER VITE NM6 ZINCATA

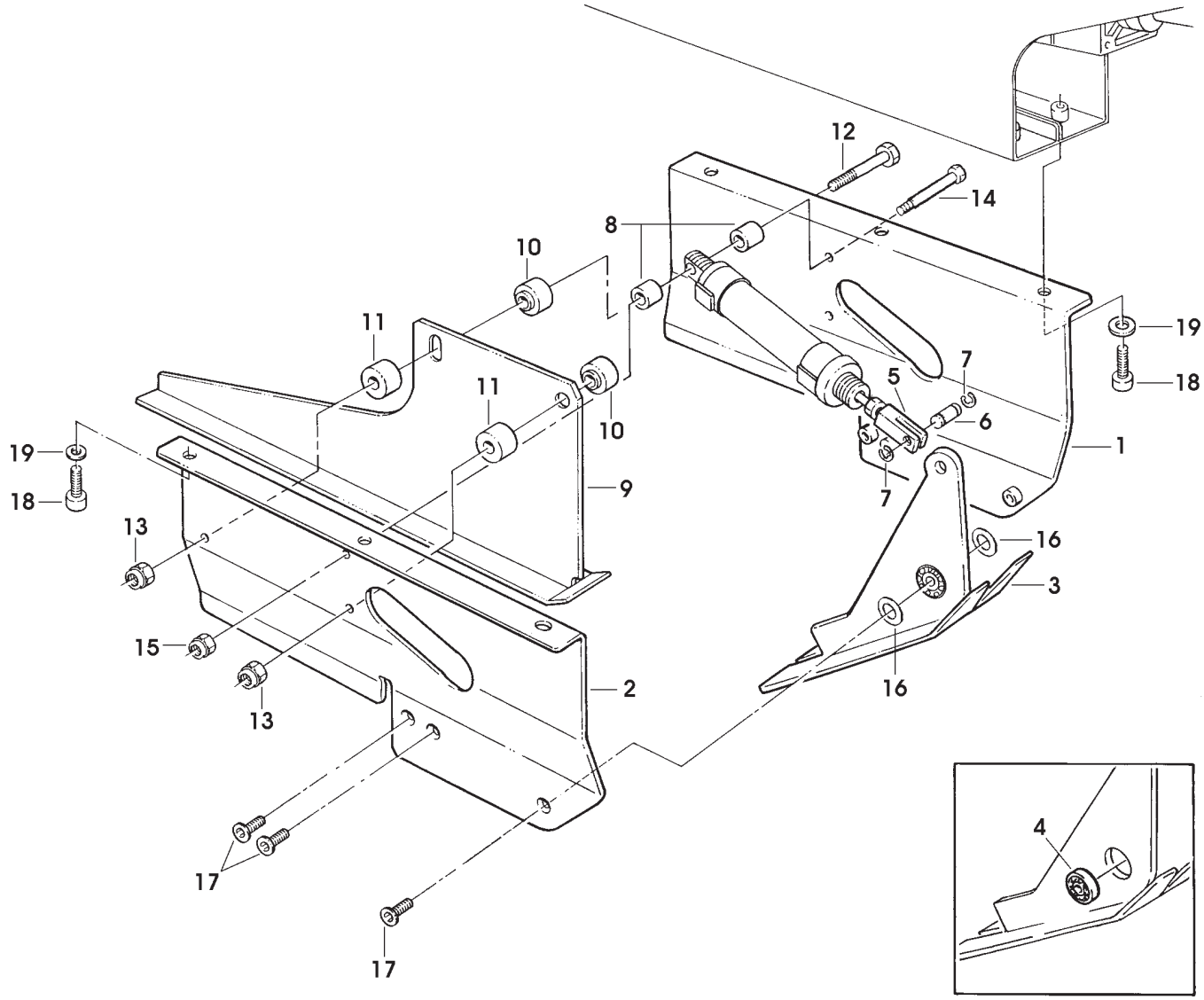
12
14
8
10
11
11
10
19
18
7
5
6
1
19
18
9
7
13
16
3
15
2
16
13
4
17
17

Fig. 15072 PORTAUNITA' SUPERIORE S7810000300A SM44 HD NASTRATRICE

Pos.	Q.tà	Codice	Descrizione
1	1	S4510004640A	SPALLA DESTRA PORTA UNITA' SUPERIORE C/INS.
2	1	S4510004740A	SPALLA SINISTRA PORTA UNITA' SUPERUIORE C/INS.
3	4	S340507793A	VITE TBEI M8x20 ZINCATA
4	4	S340012393Z	RONDELLA PIANA PER VITE M8 ZINCATA
5	4	S340028393Z	DADO AUTOBLOCCANTE M8 BASSO ZINCATO
6	2	S332586695A	BLOC DX FIX K13 TOP - 120af-3M
7	2	S332586795A	BLOC SX FIX K13 TOP - 120af-3M
8	12	S340037193Z	VITE TE M5 x 12 ZINCATA
9	12	S340006193Z	RONDELLA PIANA PER VITE M5 ZINCATA
10	1	S3403407ZZZ	MANOPOLA ZIGRINATA B.193/20 P-M6x25 (ELE.)
11	2	S330892993Z	DISTANZIALE 10x10x150
12	4	S340002193Z	VITE TE M6x12 ZINCATA
13	1	S321218647A	CARTER POST. PORTA UNITA' SUP. ASS117

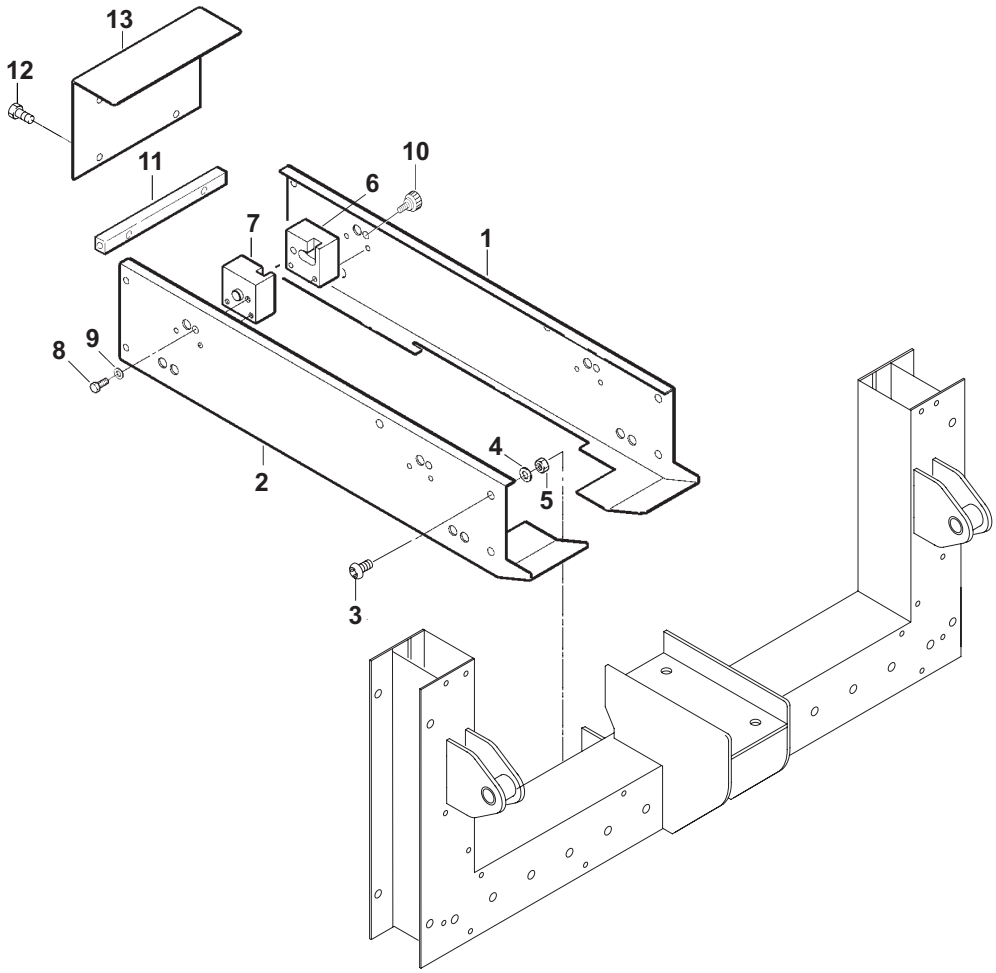
13
12
11
10
6
7
1
8
9
4
5
2
3

Fig. 15073 PORTAUNITA' INF. - GATE S7810000300A SM44 HD NASTRATRICE

Pos.	Q.tà	Codice	Descrizione
3	3	S330628493Z	DISTANZIALE 12x12x140 SM11 ZINC.
4	6	S340002193Z	VITE TE M6x12 ZINCATA
5	6	S340017593Z	RONDELLA PIANA PER VITE M6 ZINCATA
6	4	S340058493Z	VITE TCEI M8x16 ZINCATA
7	4	S340012393Z	RONDELLA PIANA PER VITE M8 ZINCATA
8	1	S4510003747A	SUPPORTO CILINDRO GATE C/INSERTI
9	6	S340012293Z	VITE TCEI M8x20 ZINCATA
10	6	S340012393Z	RONDELLA PIANA PER VITE M8 ZINCATA
11	4	S340018093Z	VITE TCEI M6x60 ZINCATA F144
12	2	S3800660A	RACCORDO GOMITO GIR. 31990610
13	1	S321010684A	PIASTRA BLOCCA SCATOLE C/LAVORAZIONE
14	4	S340057793Z	VITE TCEI M6x16 ZINCATA
15	4	S340017593Z	RONDELLA PIANA PER VITE M6 ZINCATA

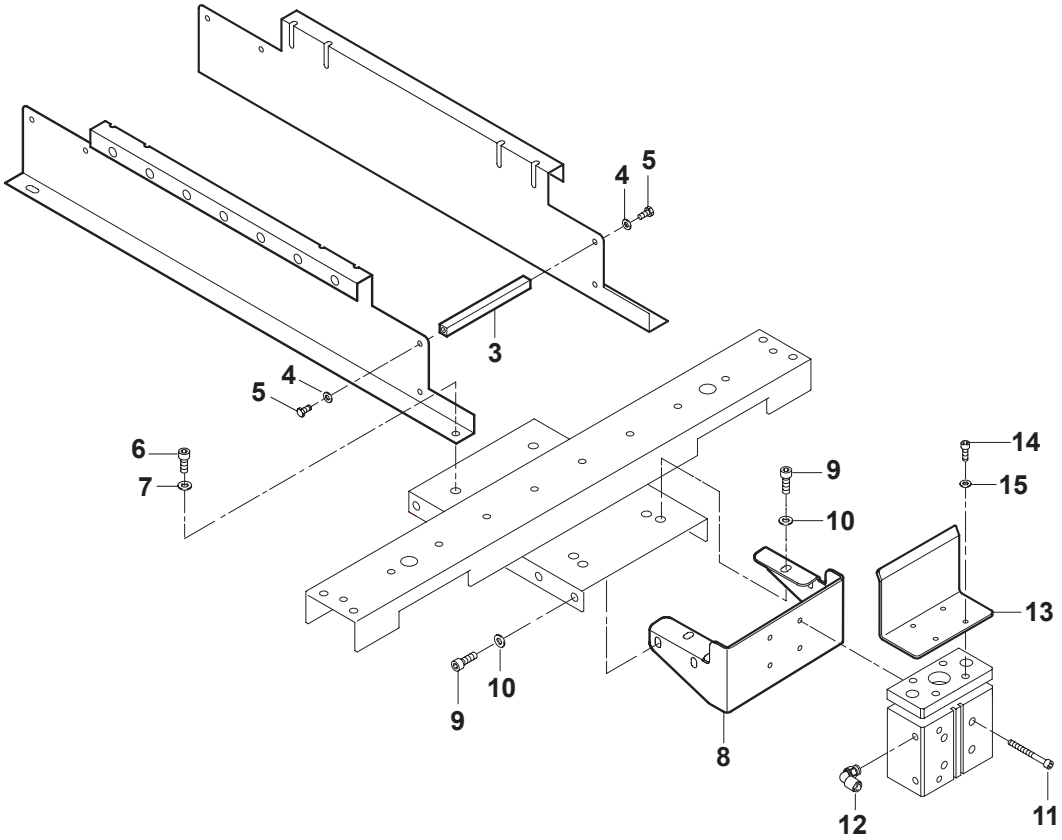
4
5
3
4
5
6
7
9
10
14
15
13
10
9
8
12
11

Figura	Descrizione figura	Magazzino	Prodotto	Descrizione
15797	kit upgrade guide mot.	SBA0014710	SM44-HD	

Posizione	Ricambio	Descrizione	Quantità	U.M.
1	SBC0024103T	blocchetto ant. Sup. mot.	2	pz
2	SCA0001705	carrello thk-hsr-20-a-1ss-c0	2	pz
3	SBC0024105	rotaia guida lineare mod. hsr20 320 lg	2	pz
4	SBC0024106V	traversa supp. Guide sm44	2	pz
5	SBC0023360T	piatto fiss. Mot.	2	pz
6	SBC0024108T	blocchetto vert. Sup. mot.	2	pz
7	SBA0014781	spalla dx porta unità inf. c\ins. Sm44	1	pz
8	SBA0014782	spalla sx porta unità inf. c\ins. Sm44	1	pz
9	S340016093Z	vite tcei m6x20 zinc.	12	pz
10	S340001593Z	vite tcei m6x25 zinc.	8	pz
11	SBC0024115T	piatto supp. Trav. Ant.	2	pz
12	SBC0024113V	piastra fiss. Supp. Guida	2	pz
13	S340010893Z	vite tcei m5x20 zinc.	12	pz
14	S340006193Z	rondella piana x vite m5 zinc.	12	pz
15	S340002393Z	dado m5 zinc.	12	pz
16	S340017593Z	rondella piana x vite m6 zinc.	24	pz
17	S340023593Z	dado m6 zinc. A bassa resist.	8	pz
18	S340057793Z	vite tcei m6x16 zinc.	16	pz
19	SBC0024114V	dima foratura sm44	1	pz

Data Lugl. 2013

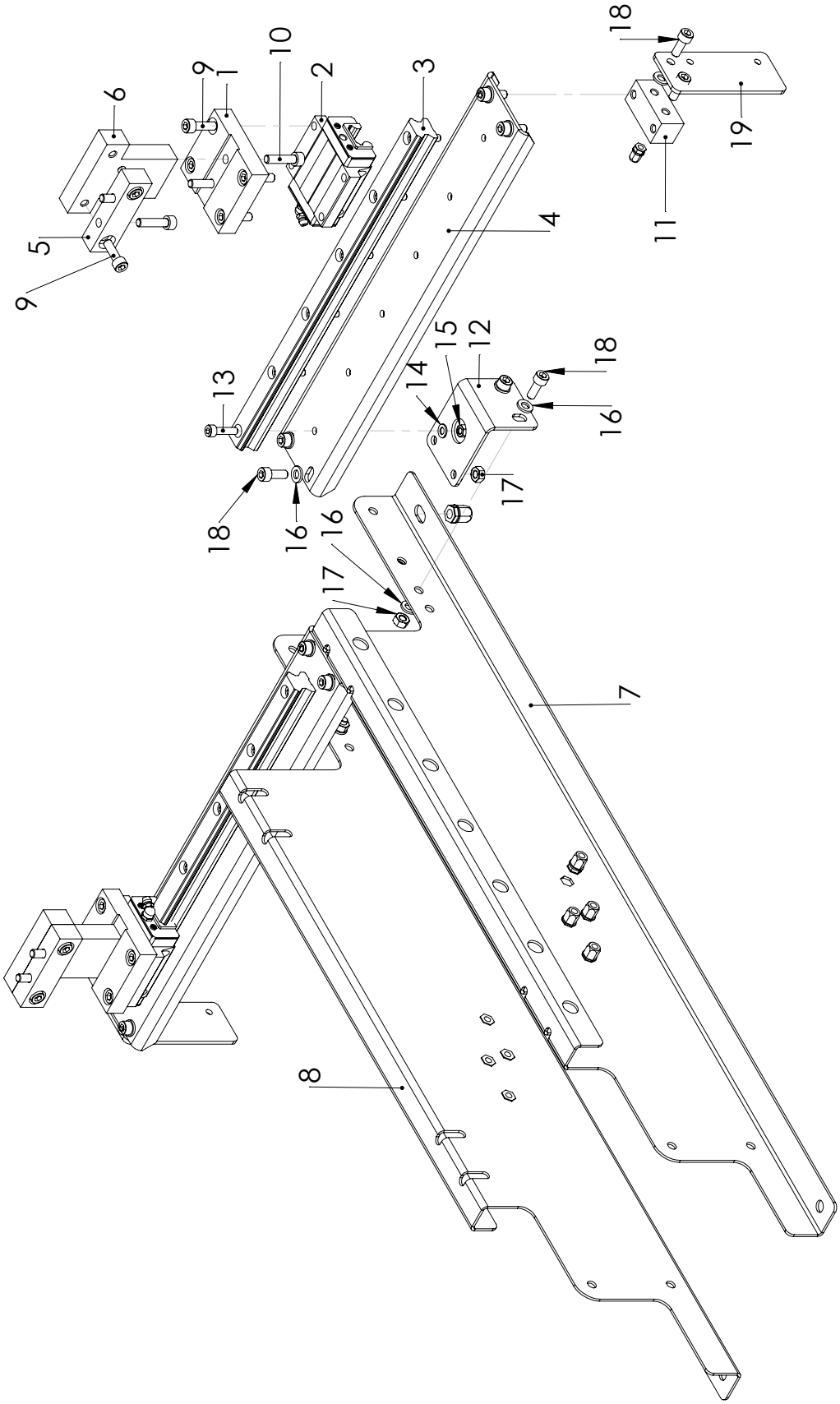
6
5
9
9
1
10
2
3
4
13
18
16
14
15
12
18
16
17
18
11
19
16
17
7
8

Fig. 15074 TRAVERSA MOTORIZZAZIONI S7810000300A SM44 HD NASTRATRICE

Pos.	Q.tà	Codice	Descrizione
1	1	S4510003147A	TRAVERSA GUIDA MOTORIZZAZIONI C/INSERTI
2	2	S4710003200A	PIGNONE 3/8" Z35 C/CUSCINETTO
3	2	S3310004292A	PIGNONE Z35 P=3/8"
4	2	S3400156A	CUSCINETTO 6005-2RS1 SKF NTN
5	2	S340019192Z	ANELLO DI ARRESTO PER FORO 47
6	2	S330491693Z	RONDELLA /6,5/30x5
7	2	S340002693Z	VITE TE M6x16 ZINCATA
8	1	SCA000775	ROTAIA GUIDA LINEARE MOD. HRS30-760LG
9	8	S340004793Z	VITE TCEI M8x30 ZINCATA
10	8	S340028393Z	DADO AUTOBLOCCANTE M8 BASSO ZINCATO
11	8	S340012393Z	RONDELLA PIANA x VITE M8 ZINC.
12	2	SCA0000776	PATTINO GUIDA LINEARE MOD. HRS30LASSG
13	2	S3310004993A	BLOCCHETTO INF. SUPPORTO MOTORIZZAZIONI
14	2	S3310005093A	BLOCCHETTO VERTICALE SUPPORTO MOTORIZZ.
15	12	S340020693Z	VITE TCEI M10x20 ZINCATA
16	2	S4410002147A	PIASTRA LATERALE GUIDA MOT. C/PERNO
17	6	S340002693Z	VITE TE M6x16 ZINCATA
18	6	S340017593Z	RONDELLA PIANA PER VITE M6 ZINCATA
19	2	S3310004593A	FORCELLA SINISTRORSA
20	2	S3310004493A	FORCELLA DESTRORSA
21	2	S3310004393A	GIUNTO CATENA
22	2	S330560293Z	VITE TENDICAT. DX/SX SM4/F-104
23	4	S340004593Z	VITE TE M5X20 ZINCATA
24	4	S340025993Z	DADO AUTOBLOCCANTTE M5 ZINCATO
25	4	S340006193Z	RONDELLA PIANA X VITE M5 ZINCATA
26	4	S3400278ZZZ	MAGLIA DI GIUNZIONE P=9,525
27	2	SCA0000362	SPEZZONE CATENA APERTO P=3/8" L=57 PASSI
28	4	S340058493Z	VITE TCEI M8X16 ZINCATA
29	4	S340012393Z	RONDELLA PIANA PER VITE M8 ZINCATA
30	1	SCB0000445	FLANGIA OSCILLANTE SNCL-40 "FESTO"
31	1	S3210009747A	PIASTRA FISSAGGIO CILINDRO
32	4	S340026793Z	VITE TE M6x30 ZINCATA
33	4	S340211493Z	DADO AUTOBLOCCANTE M6 ZINCATO
34	8	S340017593Z	RONDELLA PIANA X VITE M6 ZINC.
35	2	S3802289ZZZ	RACCORDO GOMITO 31990813
36	1	S340101693Z	TESTA A SNODO M12x1,25 ZINCATA
37	1	S3110000900A	TAMPONE CILINDRO MOTORIZZAZIONE
38	1	S320145093Z	RONDELLA SPECIALE /12/45,5X4
39	1	S340003393Z	RONDELLA TRIPLA X VITE M6 ZINC.
40	1	S340002193Z	VITE TE M6X12 ZINCATA
41	1	S380611400A	FINECORSA SME-8M-DS-24V-K-0,3-M8D

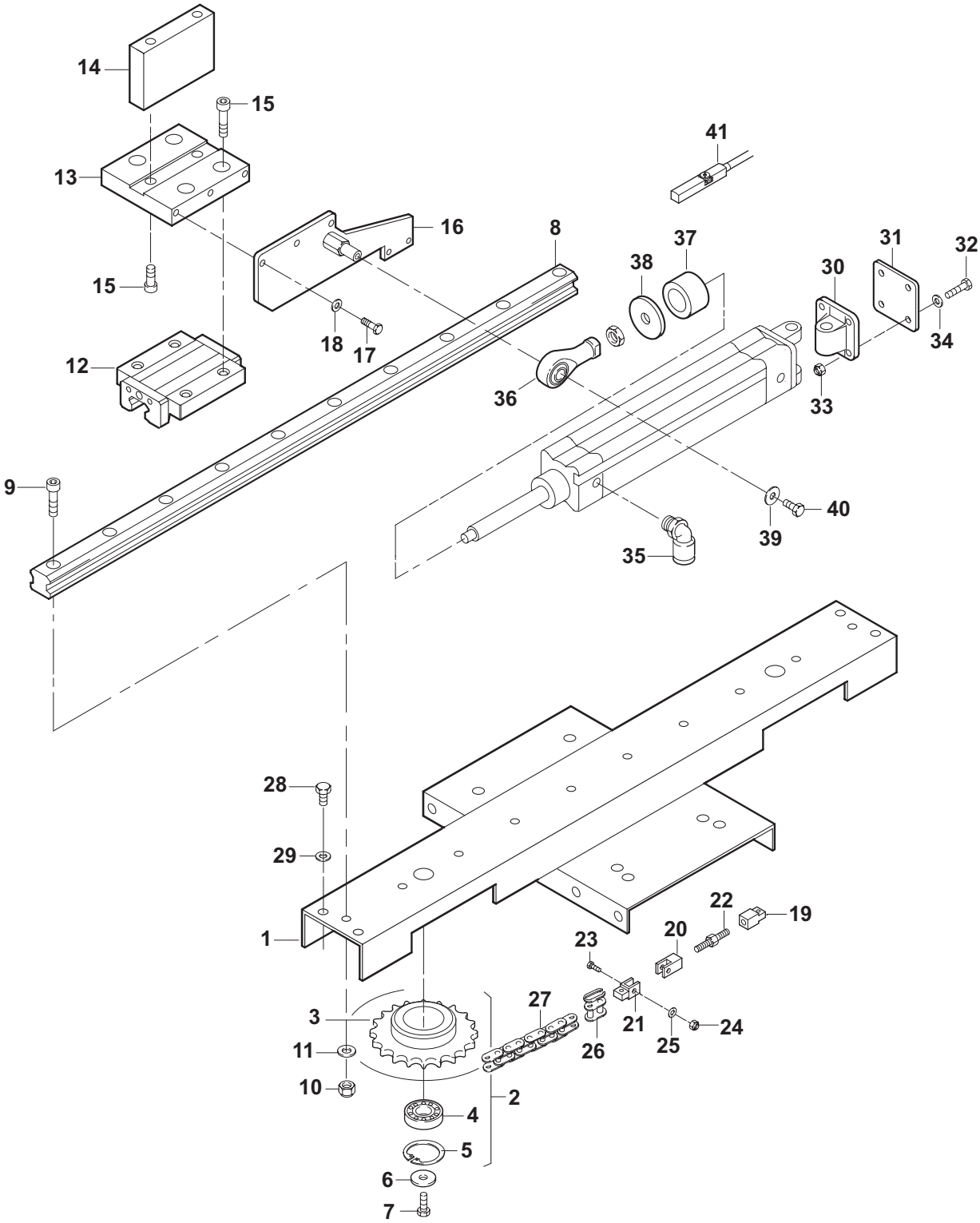
14
15
13
15
12
16
18
17
8
9
41
37
38
36
30
31
32
34
33
40
39
35
28
29
1
22
19
20
23
21
24
25
26
27
3
11
10
2
4
5
6
7

Fig. 15075 PRESSATORI LATERALI S7810000300A SM44 HD NASTRATRICE

Pos.	Q.tà	Codice	Descrizione
1	1	S3210014247A	PIASTRA INFERIORE DX PRESSATORI LATERALI
1	1	S3210014347A	PIASTRA INFERIORE SX PRESSATORI LATERALI
2	2	S3210014547A	PIASTRA SUP. PRESSATORI LATERALI
3	4	S3310004147A	BLOCCHETTO UNIONE PIASTRE
4	16	S340005393Z	VITE TSVEI M6x16 ZINCATA
5	8	S340040393Z	VITE TSVEI M5x16 ZINCATA
6	8	S340002393Z	DADO M5 ZINCATO
7	8	S340006193Z	RONDELLA PIANA PER VITE M5 ZINCATA
8	4	SCB0000415	RACCORDO QSM-M3-4-I "FESTO"
9	4	S310175300A	PRESSATORE LATERALE SM8-P 120a
10	4	S350207593Z	PERNO PER RULLI PRESSATORI 700A
11	8	S330535393Z	RONDELLA /8,5x25x4
12	4	S340028093Z	VITE TE M8x20 ZINCATA
13	4	S340065593Z	RONDELLA TRIPLA PER VITE M8 ZINCATA
14	2	S3801682A	RACCORDO Y FEMMINA LEGRIS 31400400
15	8	S340507793A	VITE TBEI M8x20 ZINCATA
16	2	S4310000100A	BIELLA C/CUSCINETTO E AMMORTIZZ.
17	2	S4410002747A	BIELLA ASS.
18	2	SCA0000861	PASSACAVO IN GOMMA SERIE "EZ" 15089
19	2	S3401215ZZZ	CUSCINETTO LBCR /20/32X45
20	2	S3310005193A	BUSSOLA PER AMMORTIZZATORE
21	2	S340017293Z	VITE TSVEI M8x30 ZINCATA
22	2	S340065593Z	RONDELLA TRIPLA PER VITE M8 ZINCATA
23	2	S340028393Z	DADO AUTOBLOCCANTE M8 BASSO
24	2	S3310005200A	ASTA GUIDA PRESSATORI
25	2	SCA0000769	PATTINO PER GUIDA LINEARE MOD. HRS25ASSG
26	4	S4210000000A	PIASTRA DI BLOCCAGGIO /TAMPONE

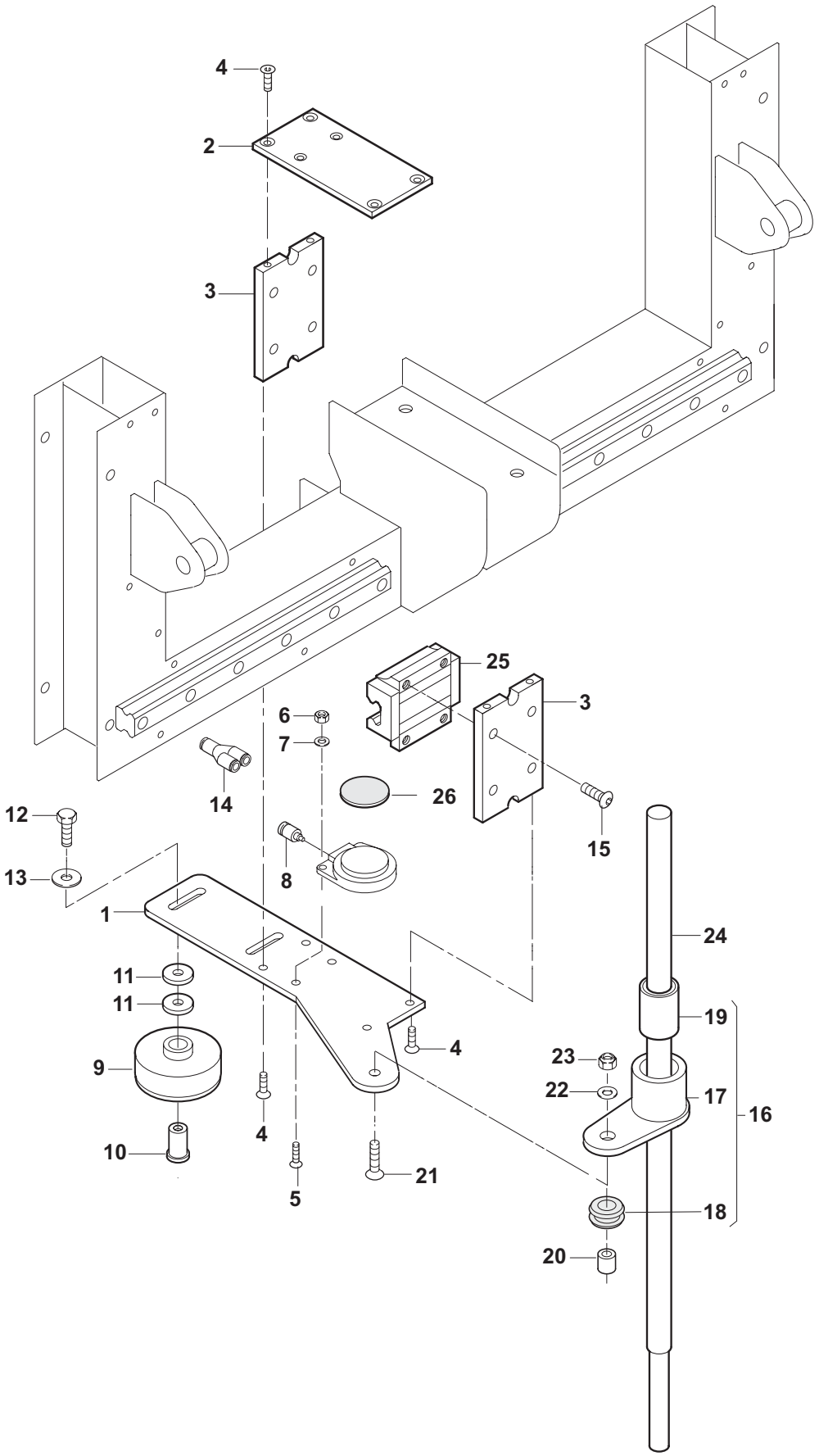

SM44 HD Set. 2007 Fig. **15075**

Fig. 15076 COLONNE - TRAVERSA SUP. S7810000300A SM44 HD NASTRATRICE

Pos.	Q.tà	Codice	Descrizione
1	1	S4510006547A	COLONNA FISSA DX C/RIVETTI
1	1	S4510006647A	COLONNA FISSA SX C/RIVETTI
2	8	S340012293Z	VITE TCEI M8X20 ZINCATA
3	2	SCA0000770	ROTAIA GUIDA LINEARE MOD. HRS25-880LG
4	16	S330973893Z	RONDELLA SPECIALE /6,5X24X4 ZINC.
5	16	S340003093Z	VITE TSVEI M6x25 ZINCATA
6	16	S340000293Z	DADO M6 ZINCATO
7	4	SCA0000769	PATTINO PER GUIDA LINEARE MOD. HRS25ASSG
8	2	S33100040000A	BLOCCHETTO FISSAGGIO TRAVERSA
9	16	S340048693Z	VITE TCEI M8x25 ZINCATA
10	16	S340006393Z	RONDELLA ELASTICA DIA. 8
11	1	S4510004247A	TRAVERSA CHIUDIFALDE SUPERIORE ASS.
12	2	SCA0000771	ROTAIA GUIDA LINEARE MOD. HRS25-320LG
13	12	S340001593Z	VITE TCEI M6x25 ZINCATA
14	2	S3310003992A	PERNO SUP. ATTACCO CILINDRO
15	2	S340205693Z	RONDELLA PIANA PER VITE M16
16	2	S340125893A	DADO AUTOBLOCCANTE M16 ZINCATO
17	8	S340059493Z	VITE TCEI M8x16 ZINCATA
18	16	S340012393Z	RONDELLA PIANA PER VITE M8 ZINCATA
20	2	S380606700A	FLANGIA OSCILL. SNCB-40 AS24-560 PNEUM.
21	2	S331019593Z	PERNO ATTACCO CIL./40 800rf/SM44 PLC
22	4	S340094592Z	ANELLO DI SICUREZZA 8 DIN 6799
23	4	S3802289ZZZ	RACCORDO GOMITO 31990813
24	2	S3800660A	RACCORDO GOMITO GIR. 31990610
25	2	S380611400A	FINECORSA SME-8M-DS-24V-K-0,3-M8D
26	2	S340101693Z	TESTA A SNODO M12x1,25 ZINCATA
27	2	S3310005593A	DISTANZIALE ATTACCO CILINDRO
28	2	S340173493Z	DADO BASSO M12x1,25 AS24
29	1	S4510003847A	CARTER DX PROTEZIONE CILINDRO C/INSERTI
29	1	S4510003947A	CARTER SX PROTEZIONE CILINDRO C/INSERTI
30	10	S340292193Z	VITE TESTA MEZZA TONDA CROCE M4x10
31	1	S3210012847A	TRAVERSA UNIONE COLONNE FISSE
32	8	S330535693Z	VITE TE M6x12 SPEC.
33	8	S340017593Z	RONDELLA PIANA x VITE M6 ZINCATA
34	2	S3804221ZZZ	SCARICO RAPIDO AQ340F-06-00 XL33 CERBER
35	2	S340073593Z	DADO M12 AUTOBLOCCANTE
36	2	S340006293Z	RONDELLA PIANA PER VITE M12 ZINC.
37	6	S340017693Z	VITE TE M4x12 ZIN.
38	6	S340004393Z	RONDELLA PIANA X VITE M4 ZINC.

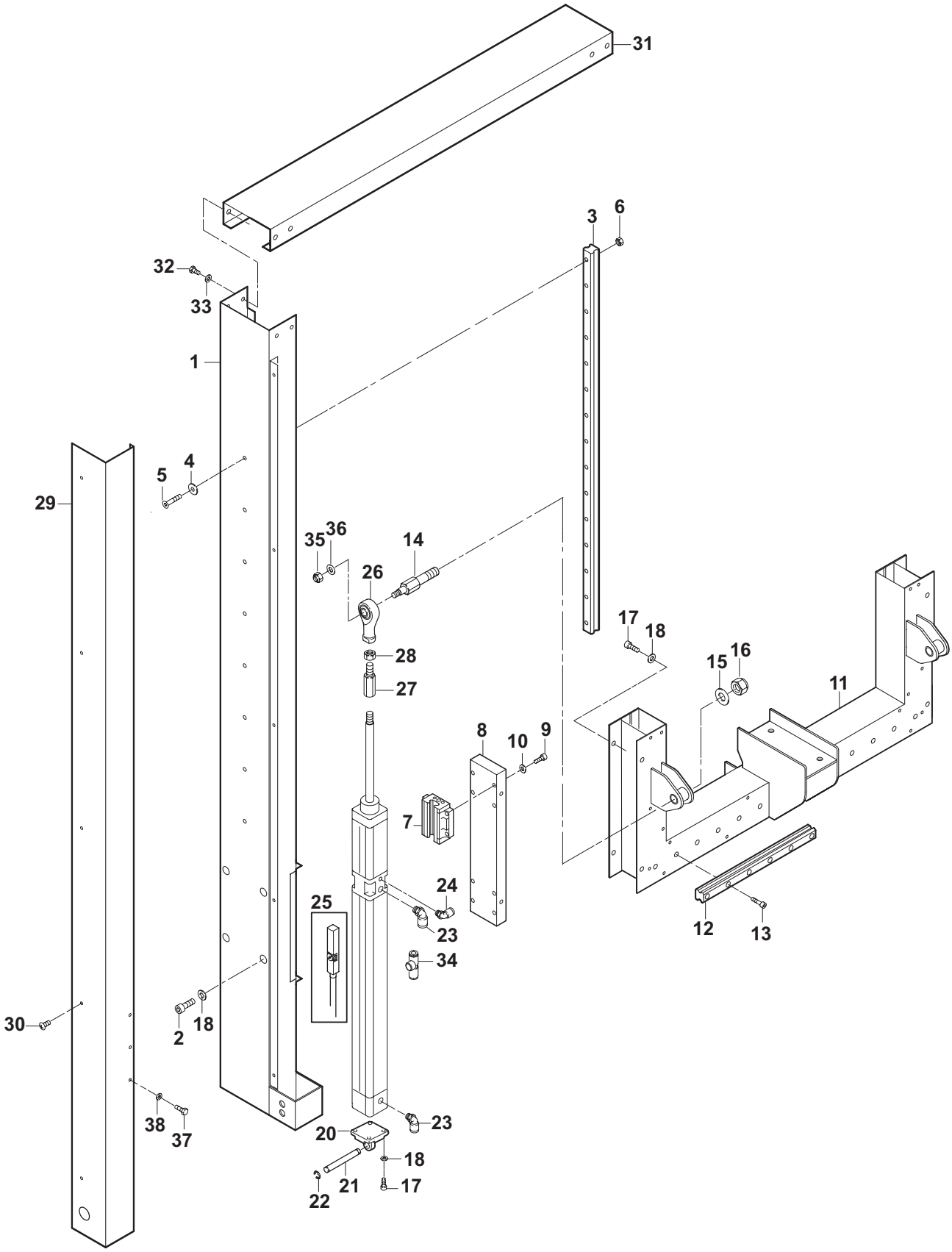

SM44 HD Set.. 2007 Fig. **15076**

Fig. 15077 CHIUDIFALDE POSTERIORE S7810000300A SM44 HD NASTRATRICE

Pos.	Q.tà	Codice	Descrizione
1	1	S4510004547A	SUPPORTO CHIUDIFALDE SUP. C/INSERTI
2	1	SBA0001109	BRACCIO CHIUDIFALDE CON INSERTI
3	2	S340403800A	SUPPORTO "NSK" UBPF 202 SM11-2000
4	1	S332478790A	DIST. PER ARM. CHIUDIF. SM11-2000
5	1	S471229100A	CHIUDIFALDA POST. ASS. 800rf/3M
6	1	S440750893A	CHIUDIFALDA ASS. 800rf/3M MOD. 39800 ZINC.
7	1	S331071092Z	PERNO ATTACCO CHIUDIFALDA
8	2	S3400193ZZZ	CUSCINETTO 6000 2RS
9	2	S331140793Z	DISTANZIALE PER CUSCINETTO SM11/XL33
10	1	S330634493A	PERNO /12x51 SM11 ZINCATO
11	1	S340101693Z	TESTA A SNODO M12z1,25 ZINCATA
12	2	SBC0000845T	DISTANZIALE SU BRACCIO CHIUDIFALDE
13	2	S310225800A	DISTANZIALE PER CILINDRO
14	1	S330634293Z	PERNO FORATO /5,25/8x51 ZINC.
15	1	S332304493A	PERNO PER CHIUDIFALDE POST. ZINC. 800rf/3M
16	2	SBC0000843T	DISTANZIALE CHIUDIFALDA POSTERIIORE
17	1	S340224593Z	VITE TCEI M5x65 ZINCATA
18	6	S330535693Z	VITE TE M6x12 SPEC.
19	6	S340000693Z	RONDELLA DENTELLATA PER VITE M6
20	2	S340006193Z	RONDELLA PIANA PER VITE M5 ZINC.
21	1	S340025993Z	DADO AUTOBLOCCANTE M5 ZINC.
22	2	S330535693Z	VITE TE M6x12 SPEC.
23	2	S340002193Z	VITE TE M6x12 ZIN.
24	1	S340101093Z	TESTA A SNODO M10x1,25 ZINCATA
25	1	S3210014447A	SQUADRETTA PER MOLLA A BANDELLA
26	1	S320157798B	PROLUNGA CHIUDIFALDA POST. SM44
27	4	S340002193Z	VITE TE M6x12 ZINCATA
28	12	S340072093Z	VITE TESTA MEZZA TONDA M5x12 CROCE ZINC.
29	1	SBA0001128	CARTER POST. BRACCIO CHIUDIF. C/INS.
30	1	S470947400A	CHIUDIFALDE LATERALE REGOLAB. ASS. SM/XL
31	2	S330943093D	CHIUDIFALDE LATERALI
32	1	S331620993B	FISS. CHIUDIFALDE LATERALE
33	1	S331621017B	PIASTRINA PER CHIUDIF. LATERALE SM11
34	2	S340012393Z	RONDELLA PIANA PER VITE M8 ZINCATA
35	2	S340004793Z	VITE T&CEI M8x30 ZINCATA
36	2	S340005193Z	VITE TCEI M6x12 ZINCATA
37	2	S340003393Z	RONDELLA TRIPLA PER VITE M6 ZINC.
38	2	S340022592Z	GRANO EIPP M6x20 BRUNITO
39	2	S460197903Z	POMOLO COMPL.
40	2	S340299793Z	VITE TCEI M8x100 ZINC.
41	2	S340012393Z	RONDELLA PIANA PER VITE M8 ZINCATA
42	2	S340028393Z	DADO AUTOBLOCCANTE M8 BASSO ZINCATO
43	2	S340017593Z	RONDELLA PIANA PER VITE M6
44	2	S340006792Z	ANELLO ELASTICO PER ALBERO D.15
45	1	S340299793Z	VITE TCEI M8x100 ZINCATA
46	2	S340065593Z	RONDELLA TRIPLA x VITE M8
47	1	S340028393Z	DADO AUTOBLOCCANTE M8 BASSO
48	2	S340028093Z	VITE TE M8x20 ZINC.
49	1	S340210792Z	ROND. DENT. ESTERNA x VITE M8
50	2	S340012393Z	RONDELLA PIANA PER VITE M8

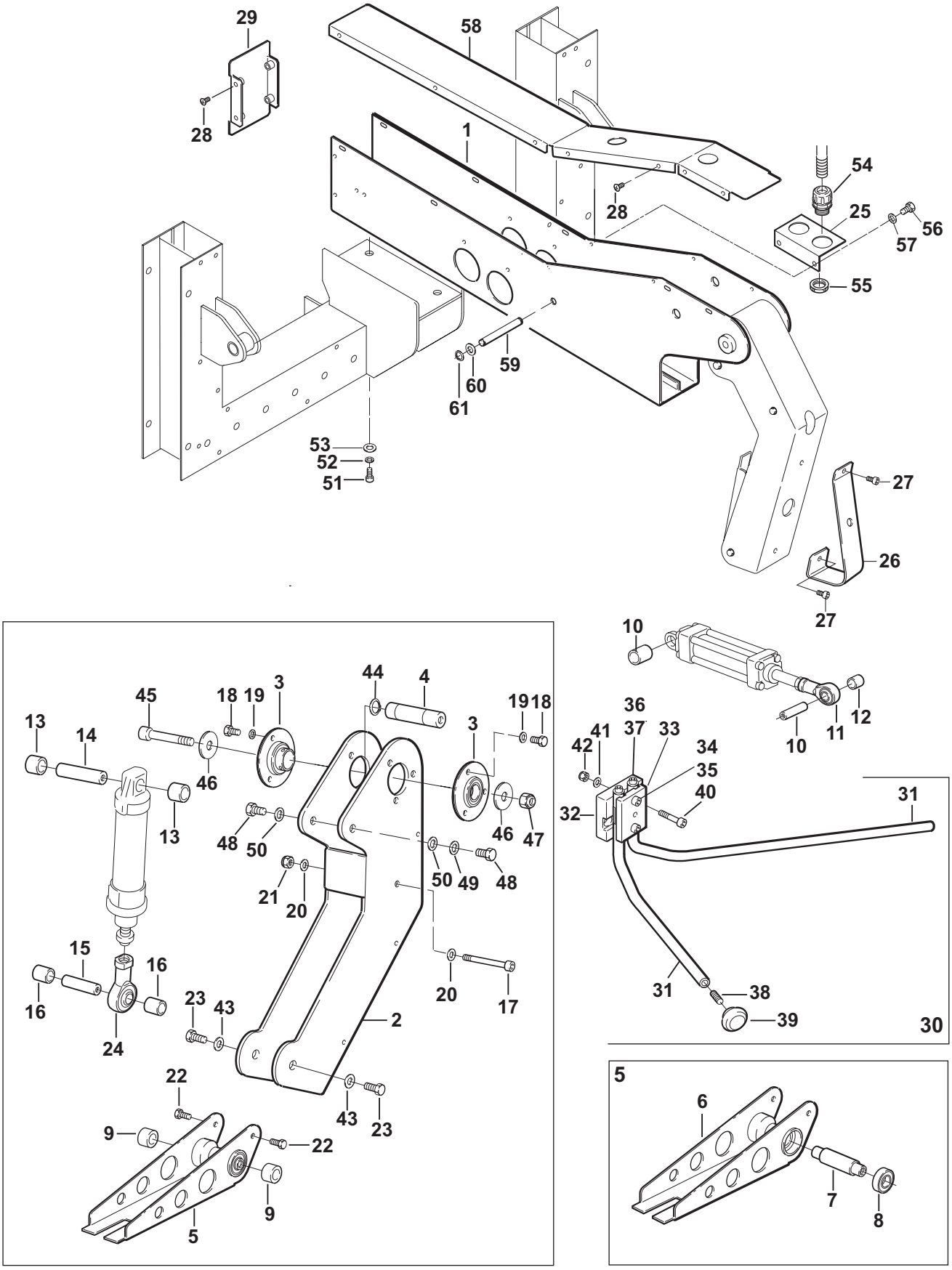
29
58
28
1
54
28
25
56
57
55
59
60
61
53
52
51
27
26
27
10
44
4
45
18
19
3
19
18
36
13
14
41
37
33
12
3
42
34
11
10
46
35
40
31
32
13
48
50
46
47
50
49
48
21
20
15
16
20
17
16
23
43
38
2
24
39
30
22
43
23
9
22
9
5
5
6
7
8

Fig. 15077 CHIUDIFALDE POSTERIORE S7810000300A SM44 HD NASTRATRICE

Pos.	Q.tà	Codice	Descrizione
51	4	S340012293Z	VITE TCEI M8x20 ZINC.
52	4	S340012393Z	RONDELLA PIANA x VITE M8 ZINC.
53	4	S340006392Z	ROND. ELASTICA DIN 7980 M8
54	2	S380605600A	RACCORDO DIRITTO "BVND-M207" T
55	2	S380594800A	DADO PER BOCCHETTONE M20x1,5G
56	2	S340032993Z	VITE TE M5x16 ZINC.
57	2	S340006193Z	RONDELLA PIANA x VITE M5 ZINCATA
58	1	SBA0001111	CARTER SUP. CHIUDIFALDE C/INSERTI
59	1	S330635193Z	PERNO /12x100 SM11 ZINCATO
60	2	S340006293Z	RONDELLA PIANA x VITE M12 ZINC.
61	2	S340094592Z	ANELLO DI SICUREZZA 8 DIN 6799

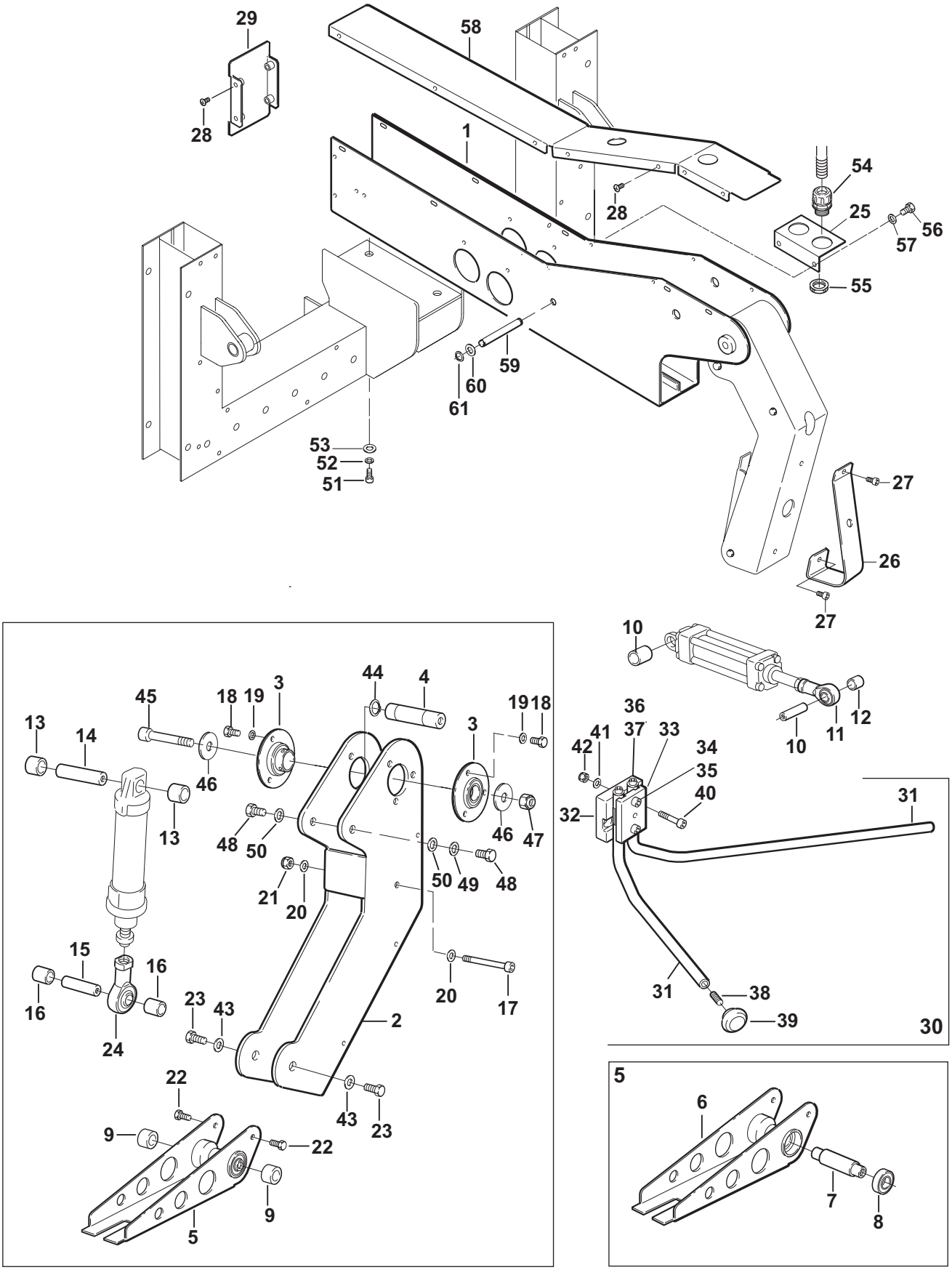
29
58
28
1
54
28
25
56
57
55
59
60
61
53
52
51
27
26
27
10
12
11
10
36
37
33
41
42
34
35
40
32
31
31
38
39
30
44
4
45
18
19
3
19
18
3
13
14
46
13
48
50
46
47
50
49
48
21
20
15
16
16
24
23
43
20
17
2
22
43
23
9
22
9
5
5
6
7
8

Fig. 15078 CASSETTA IMP. PNEUMATICO S7810000300A SM44 HD NASTRATRICE

Pos.	Q.tà	Codice	Descrizione
1	1	S3210011047A	STAFFA FISSAGGIO CASSETTA
2	2	S340065593Z	RONDELLA TRIPLA X VITE M8 ZINCATA
3	2	S340028093Z	VITE TE M8X20 ZINCATA
4	2	S3310003893A	DISTANZIALE FISSAGGIO CASSETTA
5	2	S340203293Z	VITE TCEI M8X12 ZINCATA
6	2	S340012393Z	RONDELLA PIANA X VITE M8 ZINCATA
7	1	S4510003547A	CASSETTA IMP. PNEUM. C/INSERTI
8	1	S4510003647A	SPORTELLO SCATOLA IMP. PNEUM. C/INSERTI
9	1	S3402920ZZZ	SERRATURA "SOUTHCO E5-2-015-111" WS3
10	1,8 m	S340215405Z	GOMMA SPUGNA F144
11	2	S4510003447A	PIASTRINA FISSAGGIO SPORTELLO C/INSERTI
12	2	S340398000A	CER. ELESA CFA.65 CH-6 COD. 422232 SM1
13	8	S340057793Z	VITE TCEI M6X16 ZINCATA
14	1	S3210010847A	SUPPORTO REGOLATORI DI FLUSSO
15	2	S340057793Z	VITE TCEI M6X16 ZINCATA
16	2	S340017593Z	RONDELLA PIANA X VITE M6 ZINC.
17	1	S3210011147A	PIASTRA CHIUSURA CASSETTA IMP. PNEUMATICO
18	1	S3210011447A	PIASTRA PER GUAINA CASSETTA IMP. PNEUMATICO
19	8	S340072093Z	VITE TESTA MEZZA TONDA M5X12 CROCE ZINC.
20	1	S3010001000A	EDICHETTA ADESIVA BOX PNEUMATICA
21	1	S340332705Z	TAPPO D50,8 700r/ks MOD. 29800
22	4	S340203293Z	VITE TCEI M8X12 ZINCATA

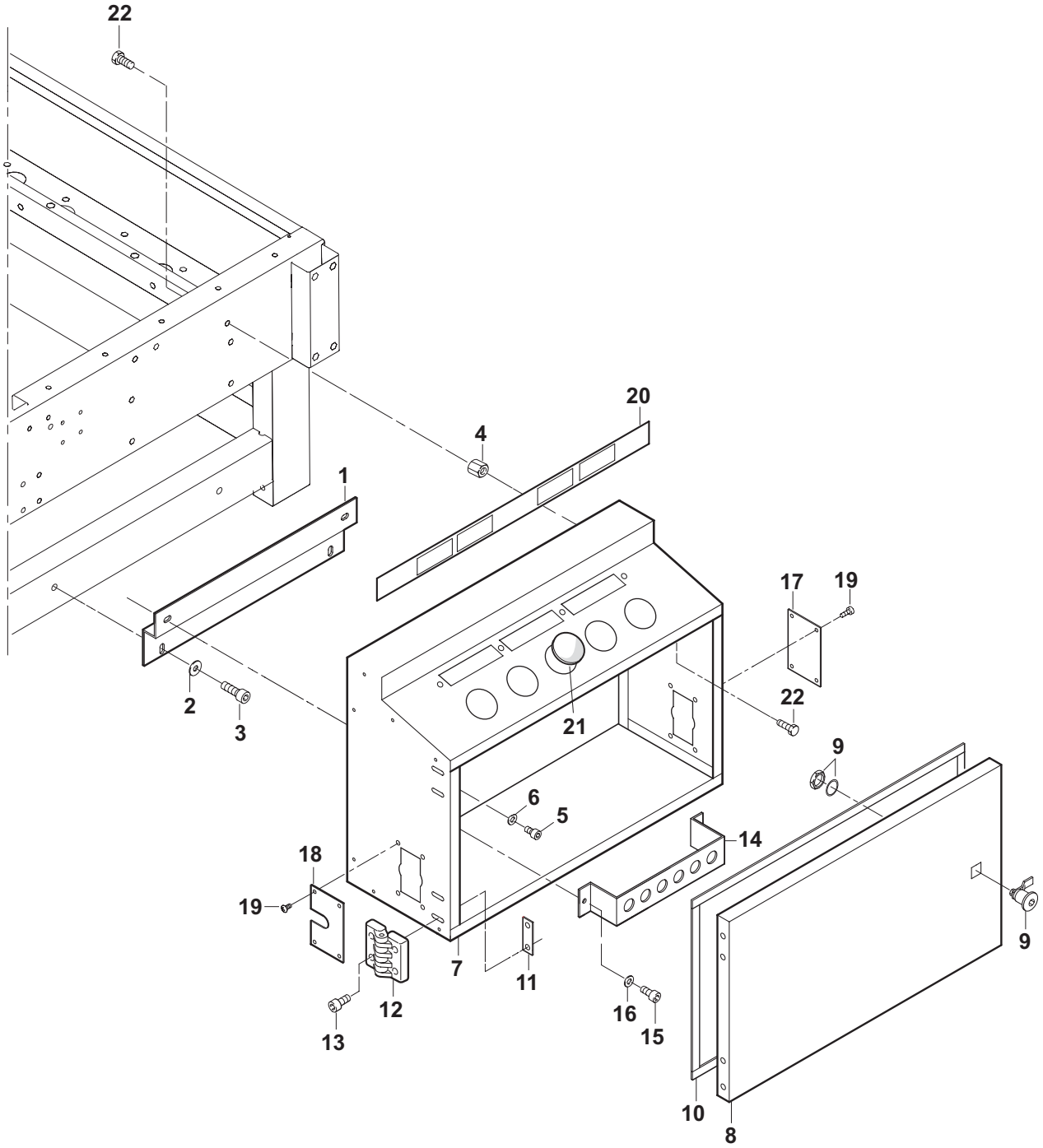
22
20
4
1
17
19
2
3
21
22
9
6
5
14
18
19
9
7
11
12
16
15
13
10
8

Fig. 15079 BANCALE S7810000300A SM44 HD NASTRATRICE

Pos.	Q.tà	Codice	Descrizione
1	1	S4510005647A	BANCALE C/INSERTI
2	4	S4304737ZZZ	GAMBA CON PIEDINO SA2 SR4
3	4	S4304788ZZZ	GAMBA CON PIEDINO AS80
4	1	S350259895A	GAMBA SCORREVOLE ESTRUSA SA2 SR4
5	1	S300098295A	RIGHELLA MILL. PER GAMBA H=440 SA2-SR4
6	1	S310149805Z	PIEDINO SERIE 2000 NERO
7	1	S350261500A	GAMBA SCORREVOLE L=600 AS80
8	1	S300105196A	ETICH. RIGHELLA MILLIM. H=600 x GAMBA S
9	4	S320567193A	PIASTRINA FISS. GAMBA
10	4	S320589893A	STAFFA PER GAMBE E TRAVERSE SIAT 2000
11	8	S340058493Z	VITE TCEI M8X16 ZINCATA
12	8	S340012393Z	RONDELLA PIANA X VITE M8 ZINCATA
13	2	S4510005047A	PROFILO FISSAGGIO CHIUSURA C/INSERTI
14	20	S340031893Z	VITE TCEI M5X12 ZINCATA
15	1	S3210018747A	CARTER ANT. SX CANALINA INF. BANCALE
16	1	S3210018547A	CARTER ANT. DX CANALINA INF. BANCALE
17	1	S3210018647A	CARTER POST. DX CANALINA INF. BANCALE
18	1	S3210025500A	CARTER CORTO CANALINA INF. BANCALE
19	21	S340072093Z	VITE TESTA MEZZA TONDA M5X12 CROCE ZINC.
20	2	S4510004947A	CANALINA INF. BANCALE C/INSERTI
21	1	S4510003247A	CARTER INFERIORE BANCALE C/INSERTI
22	3	S340057793Z	VITE TCEI M6X16 ZINCATA
23	3	S340017593Z	RONDELLA PIANA X VITE M6 ZINCATA
24	1	S3210009547A	PIASTRINA CARTER INF. BANCALE
25	2	S340072093Z	VITE TESTA MEZZA TONDA M5X12 CROCE ZINC.
26	1	S320804247A	STAFFA PER PASSALAMIERA SM44
27	3	S340057793Z	VITE TCEI M6X16 ZINCATA
28	3	S340003393Z	RONDELLA TRIPLA X VITE M6 ZINC.
29	2	S3210012747A	PROFILO FISSAGGIO CARTER SU BANCALE
30	4	S340057793Z	VITE TCEI M6X16 ZINCATA
31	4	S340017593Z	RONDELLA PIANA PER VITE M6 ZINC.
32	1	S4510004847A	CANALINA C/INSERTI
33	4	S340057793Z	VITE TCEI M6X16 ZINCATA
34	4	S340017593Z	RONDELLA PIANA X VITE M6 ZINC.
35	1	S3210014947A	COPERCHIO CANALINA
36	4	S340011293Z	VITE TCEI M5X16 ZINCATA
37	4	S340006193Z	RONDELLA PIANA X VITE M6 ZINC.
38	2	S4510005947A	SQUADRETTA FISSAGGIO CANALINA C/INSERTI
39	4	S340057793Z	VITE TCEI M6X16 ZINCATA
40	4	S340017593Z	RONDELLA PIANA X VITE M6 ZINC.
41	1	S4510006447A	CANALINA PASSAGGIO CAVI BANCALE C/INS.
42	4	S340057793Z	VITE TCEI M6X16 ZINCATA
43	4	S340017593Z	RONDELLA PIANA X VITE M6 ZINCATA
44	1	S3210010247A	COPERCHIO CANALINA BANCALE
45	6	S340072093Z	VITE TESTA MEZZA TONDA M5X12 CROCE ZINC.
46	2	S3310004700A	BLOCCHETTO SUPPORTO TRAVERSA
47	8	S340012293Z	VITE TCEI M8X20 ZINCATA
48	8	S340220592Z	RANELLA DI SAFETY "S" (SCHNORR)/8 F144
51	4	S3401501ZZZ	RUOTA/80 POLIDERNYL
52	4	S320245593Z	DISTANZIALE PER RUOTE SM481
53	4	S320724493A	ATTACCO RUOTA AS77
54	4	S340006293Z	RONDELLA PIANA X VITE M12 ZINC.
55	4	S340073593Z	DADO M12 AUTOBLOCCANTE
56	8	S340041592Z	GRANO EIPP M8X8 BR.
57	4	S780433700B	AS77 SET RUOTE /80 SIAT 2000

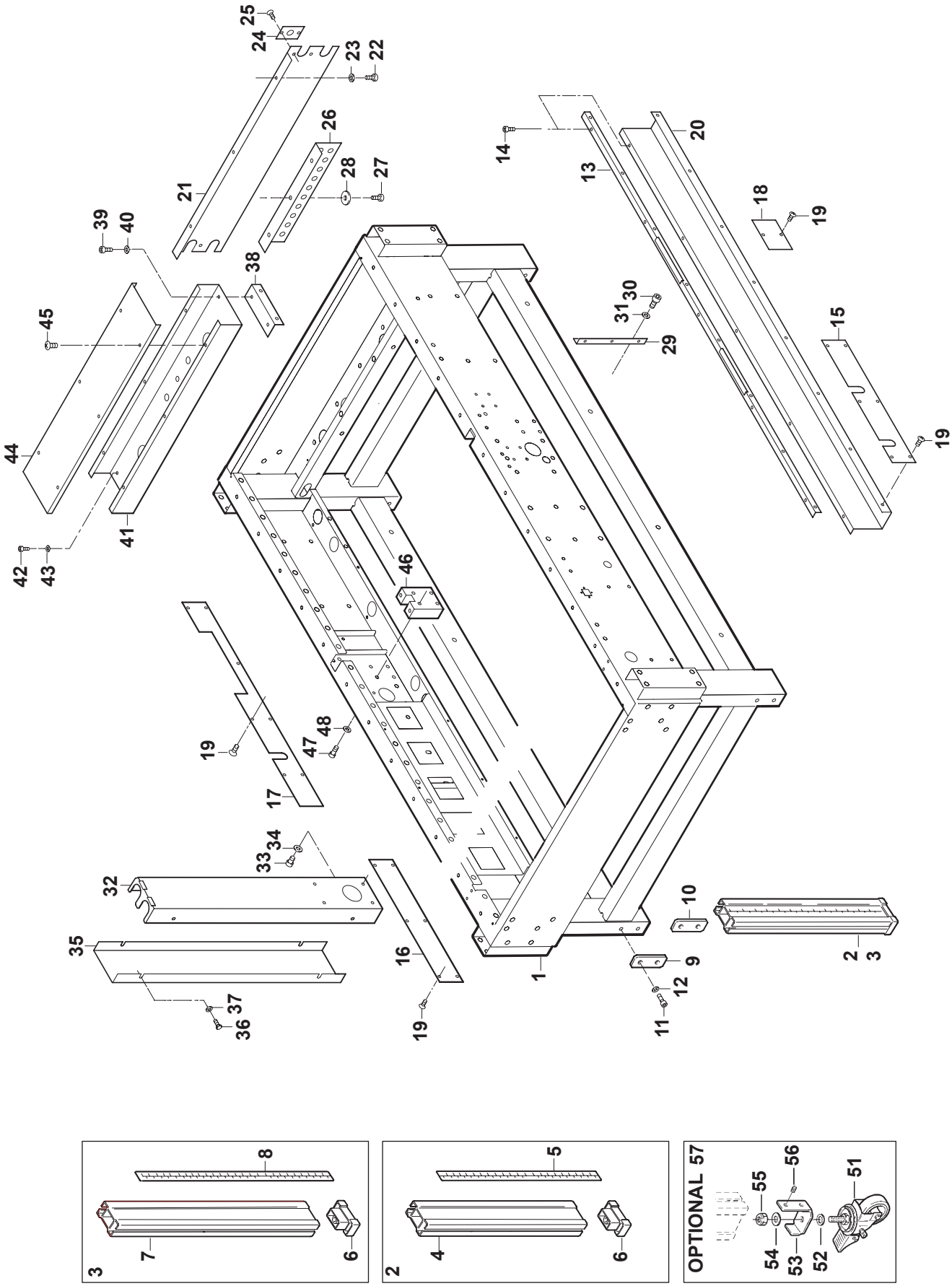
1
2
3
4
5
6
7
8
9
10
11
12
13
14
15
16
17
18
19
20
21
22
23
24
25
26
27
28
29
30
31
32
33
34
35
36
37
38
39
40
41
42
43
44
45
46
47
48
OPTIONAL 57
51
52
53
54
55
56

Fig. 15079/1 BANCALE S7810000300A SM44 HD NASTRATRICE

Pos.	Q.tà	Codice	Descrizione
1	1	S4510005147A	SUPPORTO PIASTRA CONNETTORI C/INSERTI
2	4	S340057793Z	VITE TCEI M6X16 ZINCATA
3	4	S340017593Z	RONDELLA PIANA X VITE M6 ZINCATA
4	1	S3210015147A	CARTER PROTEZIONE CONNETTORI
5	4	S340037193Z	VITE TE M5X12 ZINCATA
6	4	S340006193Z	RONDELLA PIANA X VITE M5 ZINCATA
7	1	SCC0000738	BOX M12 8 VIE 5p CALOTTA ESTRAIBILE
8	2	S340042093Z	VITE TCEI M4X16 ZINC.
9	2	S340004393Z	RONDELLA PIANA X VITE M4 ZINC.
10	3	S3210009847A	PIASTRINA FOTOCELLULA/CATADIOTTRO
11	1	S3210009647A	SQUADRA FOTOCELLULA LATO CASSETTA PNEUMATICA
12	8	S340057793Z	VITE TCEI M6X16 ZINCATA
13	8	S340003393Z	RONDELLA TRIPLA X VITE M6 ZINC.
14	2	S3802388ZZZ	FINECOR. DI SAFETY CON STAF. PER 800af
15	2	S3802139ZZZ	BOCCHETTONE SKINTOP ST11
16	4	S340011293Z	VITE TCEI M5X16 ZINCATA
17	4	S340006193Z	RONDELLA PIANA X VITE M5 ZINC.
18	17	S4710002700A	RULLO COMPLETO L=650 SM44
19	17	S4710002500A	RULLO ASSEMBLATO L=650
20	17	SBC0008965T	PERNO PER RULLO L=650 SM44S
21	62	S340102492Z	ANELLO DI ARRESTO 12 SP 220
22	14	S4710002600A	RULLO COMPLETO L=220 SM44
23	14	S4710002400A	RULLO ASSEMBLATO L=220
24	14	SBC0008964T	RULLO L=220 SM44S
25	15	S3210009447A	SQUADRETTA BLOCCAGGIO RULLI
26	1	S3210010747A	SQUADRETTA C/SCARICO BLOCCAGGIO RULLI
27	16	S340072093Z	VITE TESTA MEZZA TONDA M5X12 CROCE ZIN.
28	2	S3804198ZZZ	FOTOCELLULA E3F2-R2B4-P1-E SM/XL
29	2	S3802029ZZZ	CARTARINFRANGENTE E39-R1 SM44
30	4	S340029193Z	VITE CEI M3X10 ZINCATA
31	4	S340055893Z	RONDELLA PIANA X VITE M3 ZINCATA
32	4	S340101493Z	DADO AUTOBLOCCANTE M3 ZINCATO

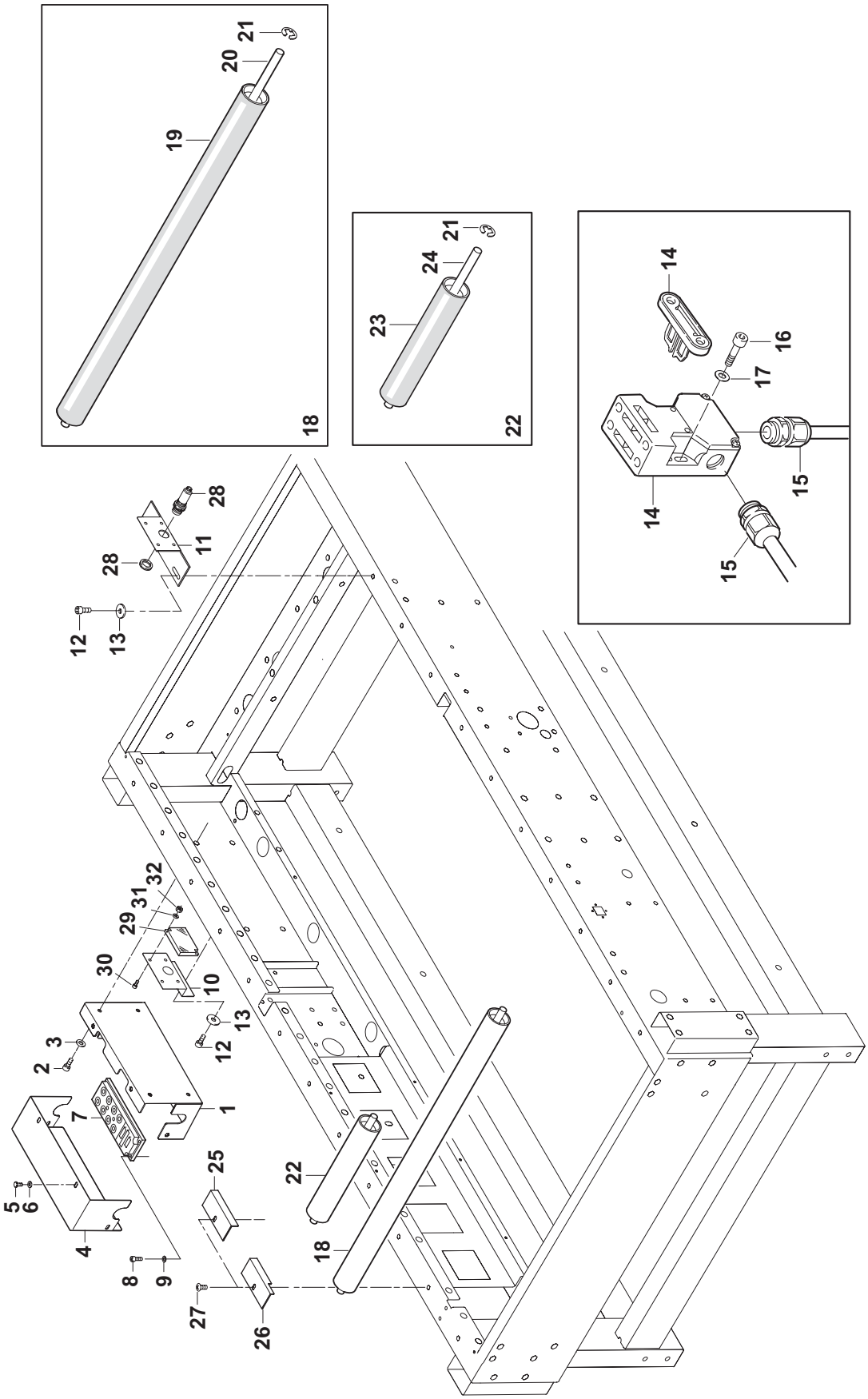
21
20
19
18
21
24
23
22
14
16
17
15
14
15
28
11
28
12
13
32
31
29
30
10
13
12
3
2
1
7
5
6
4
25
22
18
8
9
27
26

Fig. 15080 PROTEZIONI S7810000300A SM44 HD NASTRATRICE

Pos.	Q.tà	Codice	Descrizione
1	4	SBA0001112	MONTANTE C/INSERTI
2	2	S4710002800A	SPORTELLO PROTEZIONE L=430 ASSEMBLATO
2A	2	S4510006217A	SPORTELLO PROTEZIONE L=430 C/INSERTI
3	2	S3110002100A	PANNELLO PER PROTEZIONE 1010X220
4	4,6 m	S3410001300A	PROFILO IN GOMMA EPDM TIPO B. 325
5	2	S4710002900A	SPORTELLO PROTEZIONE L= 700 ASSEMBLATO
5A	2	S4510006117A	SPORTELLO PROTEZIONE L= 700 C/INSERTI
6	2	S3110001900A	PANNELLO PER PROTEZIONE 1010X450
7	5,6 m	S3410001300A	PROFILO IN GOMMA EPDM TIPO B. 325
8	2	S4710003000A	PANNELLO FISSO L=700 ASSEMBLATO
8A	2	S4510006317A	PANNELLO FISSO L= 700 C/INSERTI
9	2	S3110002000A	PANNELLO PER PROTEZIONE 1010X390
10	5,4 m	S3410001300A	PROFILO IN GOMMA EPDM TIPO B. 325
11	2	S4710003100A	PANNELLO FISSO L=1100 ASSEMBLATO
11A	2	S4510006017A	PANNELLO FISSO ENTRATA L=1100 C/INSERTI
12	2	S3110001800A	PANNELLO PER PROTEZIONE 1010X850
13	7,6 m	S3410001300A	PROFILO IN GOMMA EPDM TIPO B. 325
14	8	S340398000A	CERN. ELESA-CFA.65 CH-6 COD. 422232 SM1
15	2	S3801095ZZZ	MANIGLIA M442/110
16	32	S340003393Z	RONDELLA TRIPLA X VITE M6 ZINC.
17	52	S340057793Z	VITE TCEI M6X16 ZINCATA
18	8	SBC0000724V	STAFFA FISSAGGIO PROTEZIONE
19	2	SBC0000888V	TRAVERSA UNIONE PROTEZIONI SM11S
20	1	S450480817Z	SUPPORTO INT. C/INSERTI HM11-T
21	2	S320580716A	PIASTRINA DI CHIUSURA HM11-T
22	8	S340072093Z	VITE TESTA MEZZA TONDA M5X12 CROCE ZINC.
23	8	S340002393Z	DADO M5 ZINCATO
24	8	S340006193Z	RONDELLA PIANA X VITE M5 ZINC.
25	2	S3210011547A	SQUADRETTA FISSAGGIO BLOCCO A SCATTO
26	2	S3210011347A	SQUADRETTA FISSAGGIO SPORTELLO
27	2	S3210011247A	SQUADRETTA INT. DI SICUREZZA
28	16	S340031893Z	VITE TCEI M5X12 ZINCATA
29	16	S340006193Z	RONDELLA PIANA PER VITE M5 ZINC.
30	2	S3401707ZZZ	AGGANCIO X BLOCCO A SCATTO T330
31	2	S3401601ZZZ	BLOCCO A SCATTO SPEC. F144
32	8	S340051693Z	VITE TSVEI M5X12 ZINCATA
33	4	S340025993Z	DADO AUTOBLOCCANTE M5 ZINC.
34	4	S340006193Z	RONDELLA PIANA X VITE M5 ZINC.
35	1	SBB0003815	Pulsante d'emergenza ass. Allen Bradley'
36	1	S3802110ZZZ	CUSTODIA PLAST. GIALLA 800E-1PY, E-STOP
37	1	S3805197ZZZ	CONTATTO NC 3SB3420-0C
38	1	SCC0003186	Pulsante d'emergenza monolitico 40MM1NC
39	1	S3802139ZZZ	BOCCHETTONE SKINTOP ST11
40	1	S3802144ZZZ	CONTRODADO GMP 13,5
41	16	S340058493Z	VITE M8X16 ZINCATA

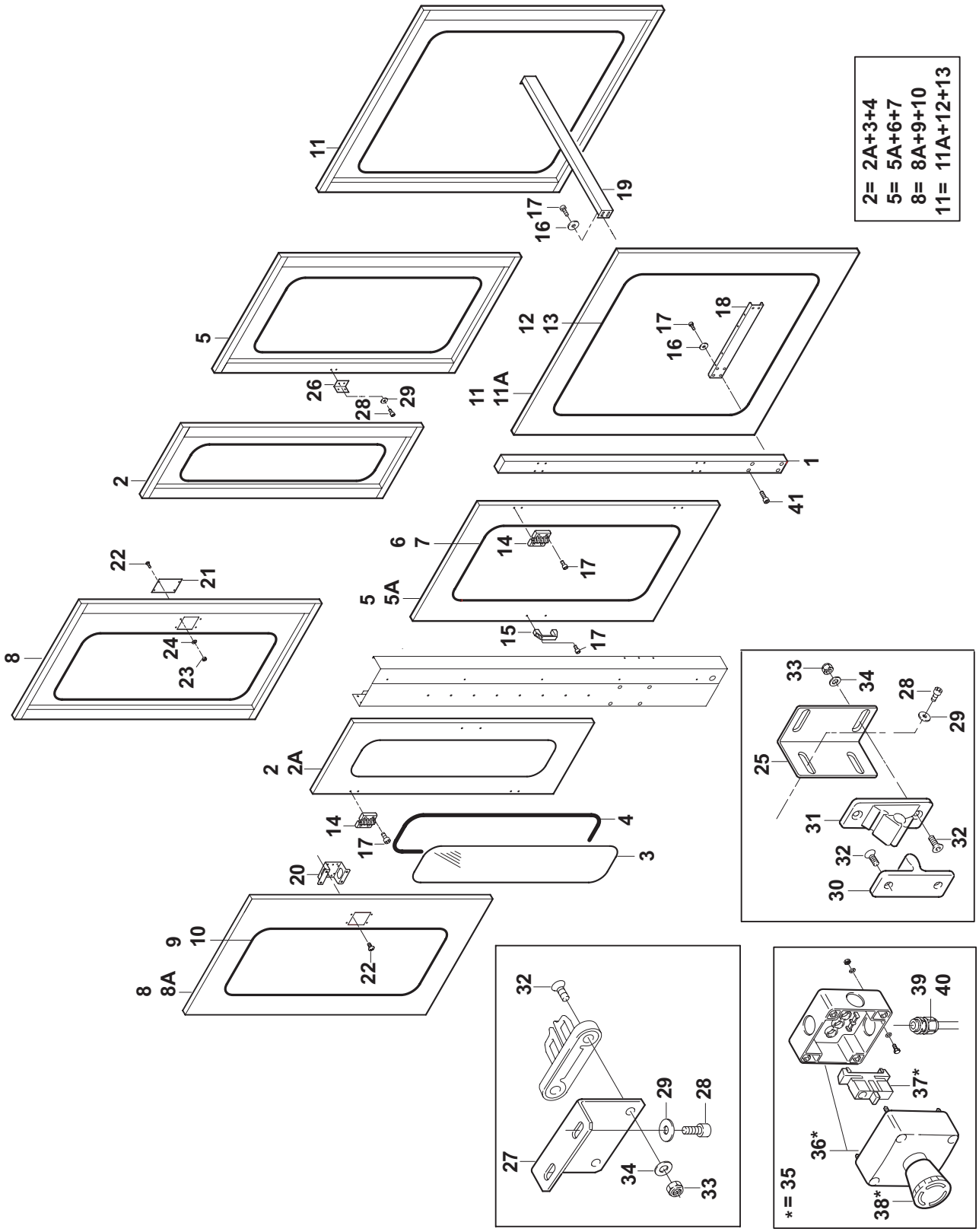
2= 2A+3+4
5= 5A+6+7
8= 8A+9+10
11= 11A+12+13
* = 35

Fig. 15082 IMPIANTO PNEUMATICO S7810000300A SM44 HD NASTRATRICE

Pos.	Q.tà	Codice	Descrizione
1	1	SCB0000436	UNITA' DI MANUTENZIONE 1/2" ITSY 103040
2	2	SCB0000477	REGOLATORE DI PRESSIONE 0-6 ASSEMBLATO
3	2	SCB0000478	REGOLATORE DI PRESSIONE 0-10 ASSEMBLATO
4	2	S3804614ZZZ	MULTY TE 33041008
5	1	S3801682A	RACCORDO Y FEMMINA LEGRIS 31400400
6	1	SCB0000421	ISOLA VALVOLE MULTIPOLARE IT-SY 103637
7	6	SCB0000473	REGOLATORE DI VELOCITA' ASSEMBLATO
8	2	SCB0000461	REGOLATORE C/MAN MS4-1/4-LR-D6-VS-DM2
9	4	S3802289ZZZ	RACCORDO A GOMITO 31990813
10	1	S3801137ZZZ	GHIERA PER GRM-3/8
11	2	SCB0000462	REGOLATORE C/MAN MS4-1/4-LR-D5-VS-DM2
12	1	SCB0000173	REGOLATORE DI PORTATA FESTO GR-3/8-B
13	2	S3804634ZZZ	RACCORDO GOMITO 31990817 COMPATTO

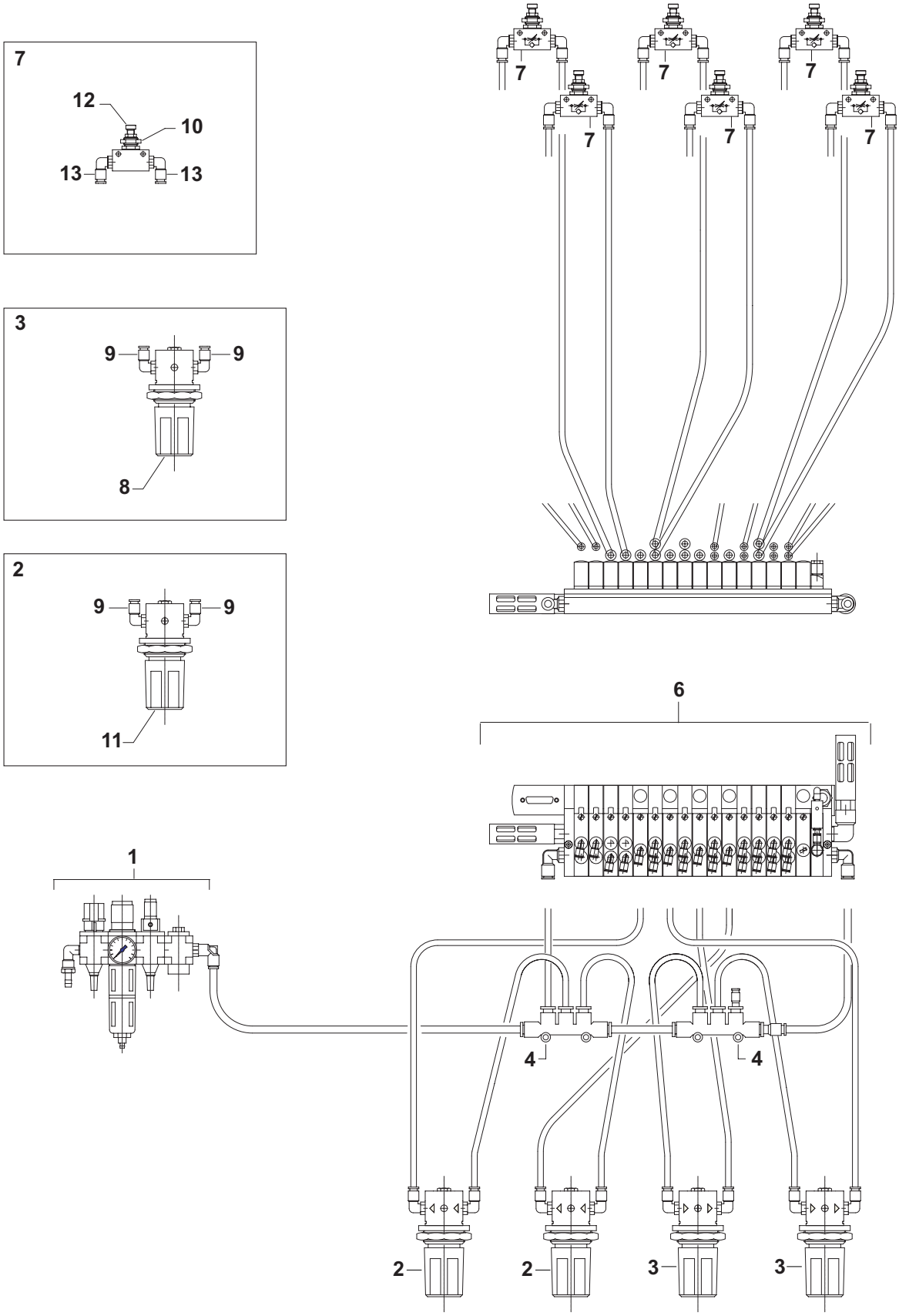
7
12
10
13
13
3
9
9
8
2
9
9
11
7
7
7
7
7
7
6
1
4
4
2
2
3
3

Fig. 15082 IMPIANTO PNEUMATICO S7810000300A SM44 HD NASTRATRICE

Pos.	Q.tà	Codice	Descrizione
14	2	SCB0000485	CILINDRO PER COLONNE ASSEMBLATO
15	2	S3803510ZZZ	RACCORDO TE PARI 31040800 800rks/3M
16	2	S3804221ZZZ	SCARICO RAPIDO AQ340F-06-00 XL33
17	1	S3800713ZZZ	RACCORDO T INTERM. 31040600
18	4	SCB0000474	MODULO DI BLOCCAGGIO ASSEMBLATO
19	2	S3801683ZZZ	RACCORDO Y FEMMINA LEGRIS 31400600
20	2	S3800743ZZZ	RIDUZIONE A CODA 31660406
21	2	S3800713ZZZ	RACCORDO T INTERM. 31040600
22	1	SCB0000482	CILINDRO D40-100 ASSEMBLATO
23	1	SCB000479	CILINDRO D25-60 ASSEMBLATO
24	1	S471123000A	SCARICO RAPIDO ASS. 800rf/3M MOD. 39800
25	1	SCB0000475	CILINDRO D16-50 ASSEMBLATO
26	2	SCB0000476	CILINDRO BARRIERA ASSEMBLATO
27	1	SCB0000480	CILINDROD40-200 ASSEMBLATO
28	2	SCB0000483	CILINDRO PER SOLLEVATORE ASSEMBLATO
29	1	SCB0000481	CILINDRO D40-170 ASSEMBLATO
30	8	S3804594ZZZ	RACCORDO GOMITO COMPATTO A CODA LISCIA 31820
31	10	S3803852ZZZ	RACCORDO GOMITO 31820600
32	2	S3800743ZZZ	RIDUZIONE A CODA 31660406
33	8	S3802781ZZZ	RACCORDO PASSALAMIERA 31390800 700r/3M
34	10	S3802078ZZZ	PASSALAMIERA A SQUADRA 31390600 800RF
35	1	S3800240ZZZ	VALVOLA SCARICO RAPIDO SEU-1/8"
36	1	S3800622ZZZ	RACCORDO GOMITO GIR. 31990410
37	1	S3801654ZZZ	RACCORDO DIR. FEMM. CIL. 31140410
38	4	SCB0000439	PIASTRA DI BLOCACCGIO EV-40 DP 'FESTO'
39	4	SCB0000415	RACCORDO QSM-M3-4-I 'FESTO'
40	4	SCB0000438	MODULO DI BLOCCAGGIO EV-40-5 'FESTO'
41	4	S3802289ZZZ	RACCORDO GOMITO 31990813
42	2	S3800660A	RACCORDO GOMITO GIR. 31990610
43	2	SCB0000413	CILINDRO DNCKE-40-450-PPV-A 'FESTO'
44	2	S380606700A	FLANGIA OSCILL. SNCB-40 AS24-560
45	2	S380660A	RACCORDO GOMITO GIR. 31990610
46	1	SCB0000447	UNITA' LINEARE DFM-40-B-P-A-KF FESTO
47	2	SCB0000463	REGOLATORE DI PORTATA GRLA-1/4-QS-8D
48	1	S380606700A	FLANGIA OSCILL. SNCB-40 AS24 560
49	1	S3801792ZZZ	CILINDRO A NORME DNCB-40-100-PPV-A
50	2	S3802289ZZZ	RACCORDO GOMITO 31990813
51	1	S380606600A	CILINDRO DNC-40-170-PPV-A AS24-560
52	1	S380606700A	FLANGIA OSCILL. SNCB-40 AS24-560
53	2	SCB0000418	CILINDRO COMPATTO ADNP-50-15-A-P-A-QS-6
54	2	S380630300A	FLANGIA OSCILLANTE SNCB-50 SM446 FESTO
55	2	SCB0000464	RAGOLATORE DI PORTATA GRLA-1/8-QS-6-D
56	1	S3801795ZZZ	CILINDRO DSNU-25-60-PPV-A
57	1	S380611400A	FINECORSA SME-8M-DS-24V-K-0,3-M8D
58	1	S3804397ZZZ	RACCORDO DIRITTO 31010419 F144
59	1	S3800739ZZZ	RACCORDO GOMITO GIR. 31990419
60	1	SCB0000419	KIT DI FISSAGGIO SMBR-8-16 'FESTO'
61	1	S3802292ZZZ	CILINDRO DSNU 16-50-PPV-A SM44
62	2	S3802289ZZZ	RACCORDO GOMITO 31990813
63	1	S380606700A	FLANGIA OSCILLANTE SNCB-40 AS24-560
64	1	SCB0000443	CILINDRO A NORME DNCB-40-200-PPV-A

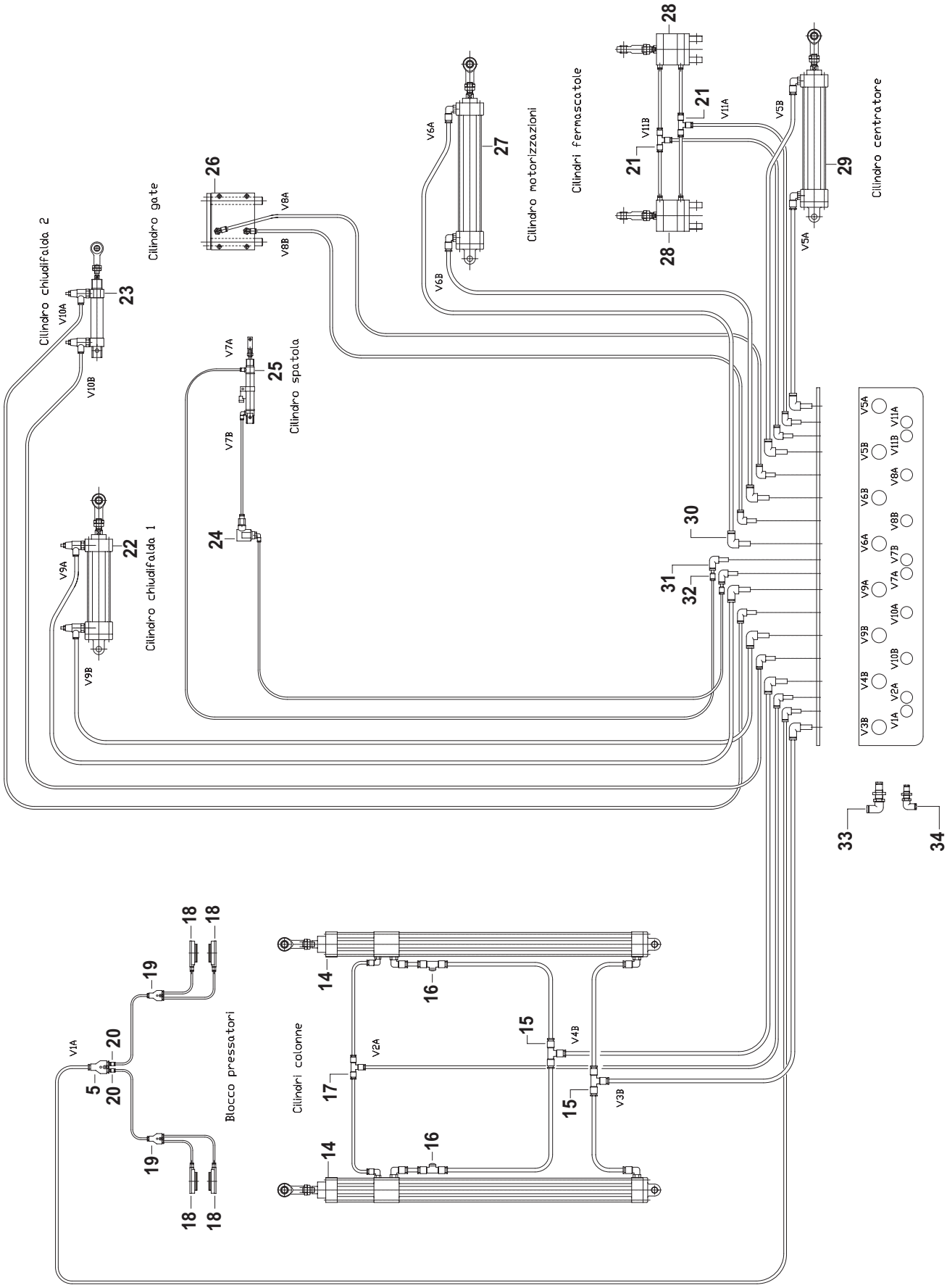
Cilindro chiudifalda 2
Cilindro gate
Cilindro motorizzazioni
Cilindri fermascatole
Cilindro centratore
Cilindro spatola
Cilindro chiudifalda 1
Blocco pressatori
Cilindri colonne
V1A
V2A
V3B
V4B
V5A
V5B
V6A
V6B
V7A
V7B
V8A
V8B
V9A
V9B
V10A
V10B
V11A
V11B

Fig. 15082 IMPIANTO PNEUMATICO S7810000300A SM44 HD NASTRATRICE

Pos.	Q.tà	Codice	Descrizione
14	2	SCB0000485	CILINDRO PER COLONNE ASSEMBLATO
15	2	S3803510ZZZ	RACCORDO TE PARI 31040800 800rks/3M
16	2	S3804221ZZZ	SCARICO RAPIDO AQ340F-06-00 XL33
17	1	S3800713ZZZ	RACCORDO T INTERM. 31040600
18	4	SCB0000474	MODULO DI BLOCCAGGIO ASSEMBLATO
19	2	S3801683ZZZ	RACCORDO Y FEMMINA LEGRIS 31400600
20	2	S3800743ZZZ	RIDUZIONE A CODA 31660406
21	2	S3800713ZZZ	RACCORDO T INTERM. 31040600
22	1	SCB0000482	CILINDRO D40-100 ASSEMBLATO
23	1	SCB000479	CILINDRO D25-60 ASSEMBLATO
24	1	S471123000A	SCARICO RAPIDO ASS. 800rf/3M MOD. 39800
25	1	SCB0000475	CILINDRO D16-50 ASSEMBLATO
26	2	SCB0000476	CILINDRO BARRIERA ASSEMBLATO
27	1	SCB0000480	CILINDROD40-200 ASSEMBLATO
28	2	SCB0000483	CILINDRO PER SOLLEVATORE ASSEMBLATO
29	1	SCB0000481	CILINDRO D40-170 ASSEMBLATO
30	8	S3804594ZZZ	RACCORDO GOMITO COMPATTO A CODA LISCIA 31820
31	10	S3803852ZZZ	RACCORDO GOMITO 31820600
32	2	S3800743ZZZ	RIDUZIONE A CODA 31660406
33	8	S3802781ZZZ	RACCORDO PASSALAMIERA 31390800 700r/3M
34	10	S3802078ZZZ	PASSALAMIERA A SQUADRA 31390600 800RF
35	1	S3800240ZZZ	VALVOLA SCARICO RAPIDO SEU-1/8"
36	1	S3800622ZZZ	RACCORDO GOMITO GIR. 31990410
37	1	S3801654ZZZ	RACCORDO DIR. FEMM. CIL. 31140410
38	4	SCB0000439	PIASTRA DI BLOCACCGIO EV-40 DP 'FESTO'
39	4	SCB0000415	RACCORDO QSM-M3-4-I 'FESTO'
40	4	SCB0000438	MODULO DI BLOCCAGGIO EV-40-5 'FESTO'
41	4	S3802289ZZZ	RACCORDO GOMITO 31990813
42	2	S3800660A	RACCORDO GOMITO GIR. 31990610
43	2	SCB0000413	CILINDRO DNCKE-40-450-PPV-A 'FESTO'
44	2	S380606700A	FLANGIA OSCILL. SNCB-40 AS24-560
45	2	S380660A	RACCORDO GOMITO GIR. 31990610
46	1	SCB0000447	UNITA' LINEARE DFM-40-B-P-A-KF FESTO
47	2	SCB0000463	REGOLATORE DI PORTATA GRLA-1/4-QS-8D
48	1	S380606700A	FLANGIA OSCILL. SNCB-40 AS24 560
49	1	S3801792ZZZ	CILINDRO A NORME DNCB-40-100-PPV-A
50	2	S3802289ZZZ	RACCORDO GOMITO 31990813
51	1	S380606600A	CILINDRO DNC-40-170-PPV-A AS24-560
52	1	S380606700A	FLANGIA OSCILL. SNCB-40 AS24-560
53	2	SCB0000418	CILINDRO COMPATTO ADNP-50-15-A-P-A-QS-6
54	2	S380630300A	FLANGIA OSCILLANTE SNCB-50 SM446 FESTO
55	2	SCB0000464	RAGOLATORE DI PORTATA GRLA-1/8-QS-6-D
56	1	S3801795ZZZ	CILINDRO DSNU-25-60-PPV-A
57	1	S380611400A	FINECORSA SME-8M-DS-24V-K-0,3-M8D
58	1	S3804397ZZZ	RACCORDO DIRITTO 31010419 F144
59	1	S3800739ZZZ	RACCORDO GOMITO GIR. 31990419
60	1	SCB0000419	KIT DI FISSAGGIO SMBR-8-16 'FESTO'
61	1	S3802292ZZZ	CILINDRO DSNU 16-50-PPV-A SM44
62	2	S3802289ZZZ	RACCORDO GOMITO 31990813
63	1	S380606700A	FLANGIA OSCILLANTE SNCB-40 AS24-560
64	1	SCB0000443	CILINDRO A NORME DNCB-40-200-PPV-A

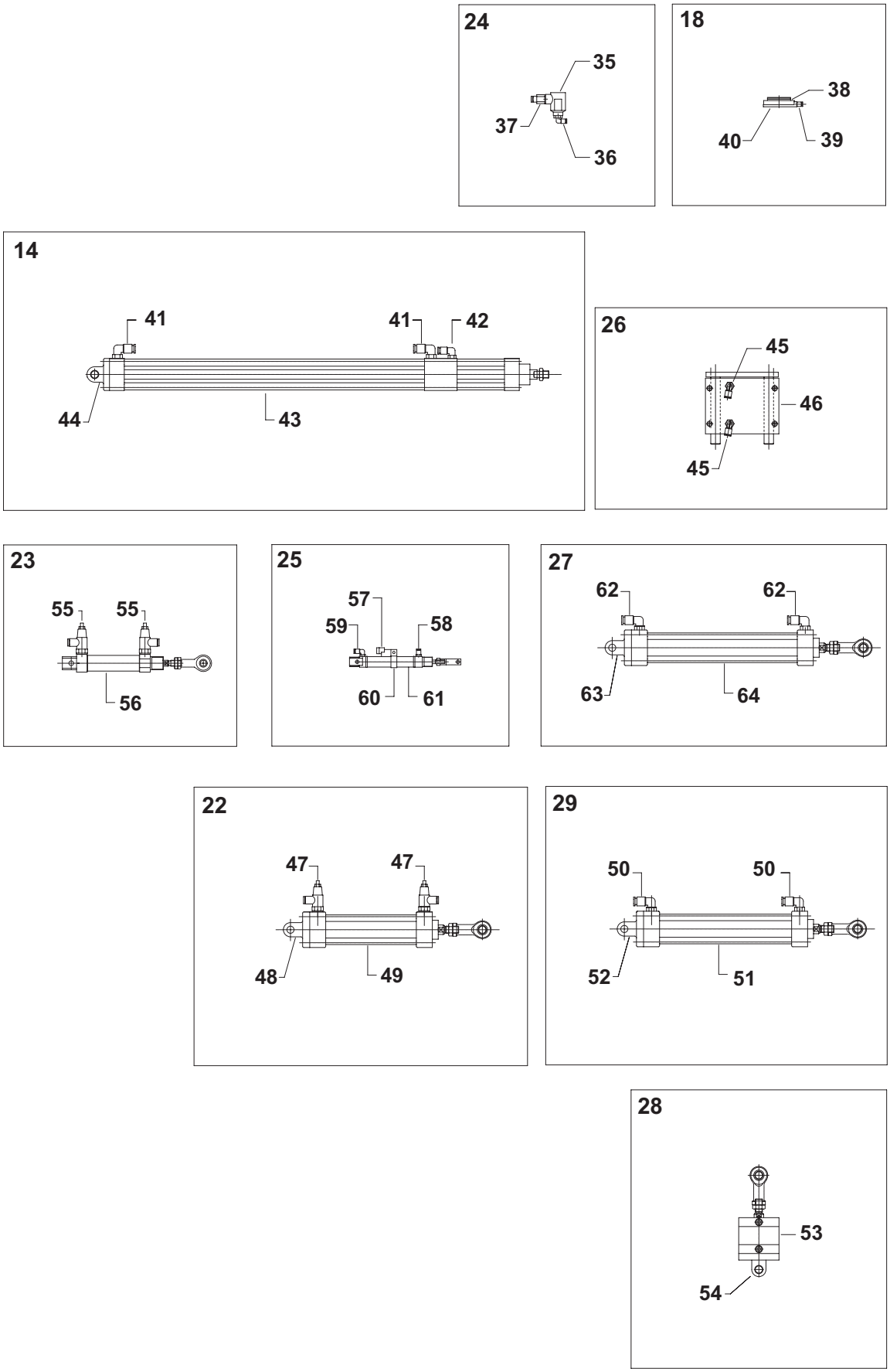
24
35
37
36
18
38
40
39
14
41
41
42
44
43
26
45
46
45
23
55
55
56
25
57
59
58
60
61
27
62
62
63
64
22
47
47
48
49
29
50
50
52
51
28
53
54

Fig. 15362 GRUPPO ESCLUSIONE UNITA' INFERIORE SM44 HD NASTRATRICE

Pos.	Q.tà	Codice	Descrizione
1	2	SBC0014861	Piastra fissaggio guida vert. SM44HD
2	2	SCA0001293	Pattino "MRS15W-N-K0" ROLLON
3	2	SCA0001292	Guida MRR15-180-N Rollon
4	4	SBC0014864T	Distanziale attacco K11 bottom SM44HD
5	6	S340001693Z	VITE TCEI M4X20 ZINCATA
6	2	S340011693Z	DADO BASSO M8 ZINC.
7	8	S340110993Z	VITE TCEI M4X8 ZINCATA
8	1	SBA0008828V	Telaio sostegno unità nastr. SM44HD
9	4	S340048693Z	VITE TCEI M8X25 ZINCATA
10	4	S340065593Z	RONDELLA TRIPLA X VITE M8 ZINC
11	1	SBA0008830	Spalla dx porta unità inf. c/ins.SM44HD
12	1	SBA0008831	Spalla sx porta unità inf. c/ins.SM44HD
13	8	S340002193Z	VITE TE M6X12 ZINCATA
14	2	SBC0014860V	Piastra inf. cilindro verticale SM44HD
15	2	SCB0000695	CIL. A NORME DSNU-20-100-PPV-A Festo
16	1	S380611400A	Finecorsa SME-8M-DS-24V-K-0,3-M8D
17	4	S340028393Z	DADO AUTOBLOCCANTE M8 BASSO ZINCATO
18	2	S3800713ZZZ	RACCORDO T INTERM.31040600
19	4	S3800660A	RACCORDO GOMITO GIR.31990610
20	2	SCB0000696	Kit di fissaggio SMBR-8-20 " Festo"

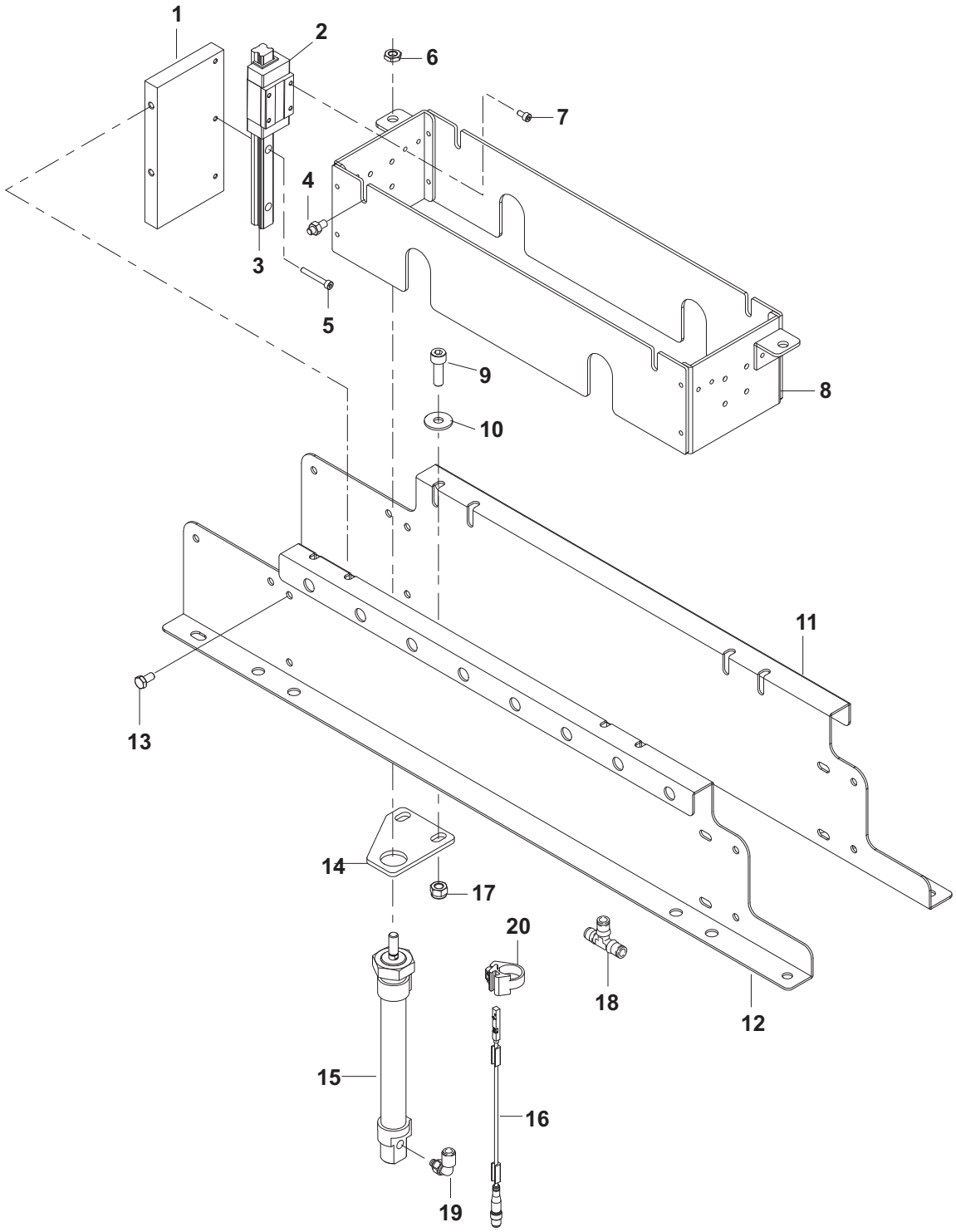
1
2
6
7
4
3
5
9
8
10
11
13
14
17
20
18
12
15
16
19

SIAT

M. J. MAILLIS GROUP

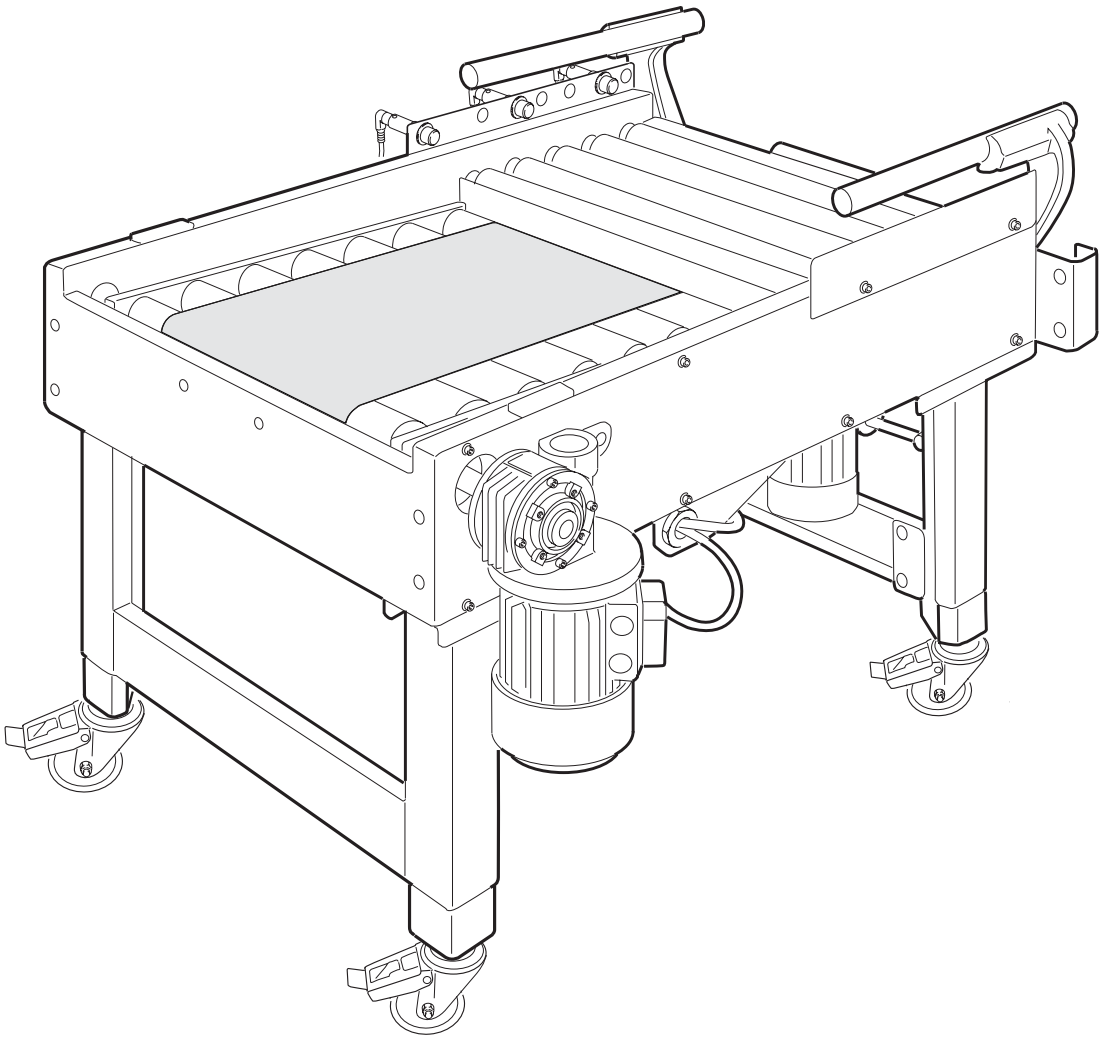

AS24 HD

ALIMENTATORE A TAPPETO

POWER INFEED CONVEYOR

SELECTEUR D'ALIMENTATION MOTORISE

MOTORISIERTE BESCHICKUNGS VORRICHTUNG

ALIMENTADOR CON CINTA TRANSPORTADORA

PARTI DI RICAMBIO

SPARE PARTS LIST

PIECES DETACHEES

ERSTAZTEILLISTE

MANUAL DE RECAMBIOS

CE

Cod. pubbl.: SMI00005I

LE PRESCRIZIONI NORMATIVE

INFORMAZIONI IMPORTANTI

Questa macchina è stata sottoposta ad un collaudo finale sulla funzionalità di tutte:
- parti componenti
- protezioni
- comandi
- comandi di emergenza

Vi chiediamo gentilmente di leggere con attenzione il manuale d'uso e manutenzione allegato, prima di utilizzare la macchina.

Non modificate la macchina; infatti in caso di modifica:
- decade la conformità alle prescrizioni di legge applicate
- la macchina non garantisce la sicurezza per cui è stata progettata e costruita
- decade la garanzia

Ringraziamo per la collaborazione.

LEGAL REGULATIONS

IMPORTANT INFORMATION

This machinehas been subjected to a final test on the operation of all:
- component parts
- safety guards
- controls
- emergency controls

Please read the attached instruction and maintenance manualcarefully before using the machine.

Do not make any modifications to the machine. If the machine is modified in any way:
- conformity with the provisions of the law applied is forfeited;
- the safety for which the machinedoes not guarantee it has been designed and built;
- the guarantee is forfeited.

Thank you for your co-operation.

LES PRESCRIPTIONS REGLEMENTAIRES

INFORMATIONS IMPORTANTES

Cette machine a été soumise à un test final en vue de vérifier le fonctionnement de toutes:
- les pièces qui la composent
- les protections
- les commandes
- les commandes d'urgence

Nous demandons de bien vouloir lire attentivement le mode d'emploi et d'entretien ci-joint, avant d'utiliser la machine.

Ne modifiez pas la machine: en effet, en cas de modification de la machine:
- celle-ci n'est plus conforme aux prescriptions de la loi appliquées
- la machine ne garantit plus la sécurité pour laquelle elle a été conçue et construite
- la garantie perd sa validité

Nous vous remercions de votre collaboration.

RECHTSVORSCHRIFTEN

WICHTIGE INFORMATIONEN

An der Maschine wurde eine Endkontrolle in Bezug auf die Funktionstüchtigkeit aller:
- Komponenten
- Schutzvorrichtungen
- Steuerungen
- Notsteuerungen durchgeführt

Wir ersuchen Sie höflichst, das beiliegende Gebrauchs- und Wartungshandbuch vor der Verwendung der Maschine aufmerksam durchzulesen.

Keine Änderungen an der Maschine vornehmen; bei Änderungen:
- wird die Konformität mit den Bestimmungen der angewendeten Gesetze verwirkt
- gewährleistet die Maschine nicht die Sicherheit, für die sie geplant und gebaut wurde
- verfällt die Garantie

Danke für Ihre Zusammenarbeit.

LAS PRESCRIPCIONES NORMATIVAS

INFORMACIONES IMPORTANTES

Esta máquina ha sido sometida a una prueba final para comprobar las funciones de todas:
- las partes de sus componentes
- protecciones
- mandos
- mandos de emergencia

Les rogamos que antes de utilizar la máquina lean atentamente el manual de empleo y manutención adjunto.

Asimismo les pedimos que no realicen ninguna modificación en la máquina, ya que en caso de modificación de la misma:
- decae la conformidad con las prescripciones de ley aplicadas
- la máquina no garantiza las condiciones de seguridad para las que ha sido proyectada y fabricada
- decae la garantía

Les agradecemos la colaboración.

SIAT S.p.A. - Via Puecher, 22 - 22078 TURATE (CO) ITALY - P.O. BOX 1
Tel. 02-964951 - Telefax 02-9689727
http://www.siat.com - E-Mail: siat@siat.com

Parti di ricambio Alimentatore AS24 HD.

Pubblicazione di proprietà della Siat S.p.A.
Via Puecher, 22 - 22078 TURATE (CO) - ITALY
Tel. 02-964.951 - Fax 02-968.9727

Edizione Ottobre 2007

Vietata la riproduzione. Tutti i diritti riservati
© Siat S.p.A. 2007

Pubblicazione n° SMI00005I
Revisione 0

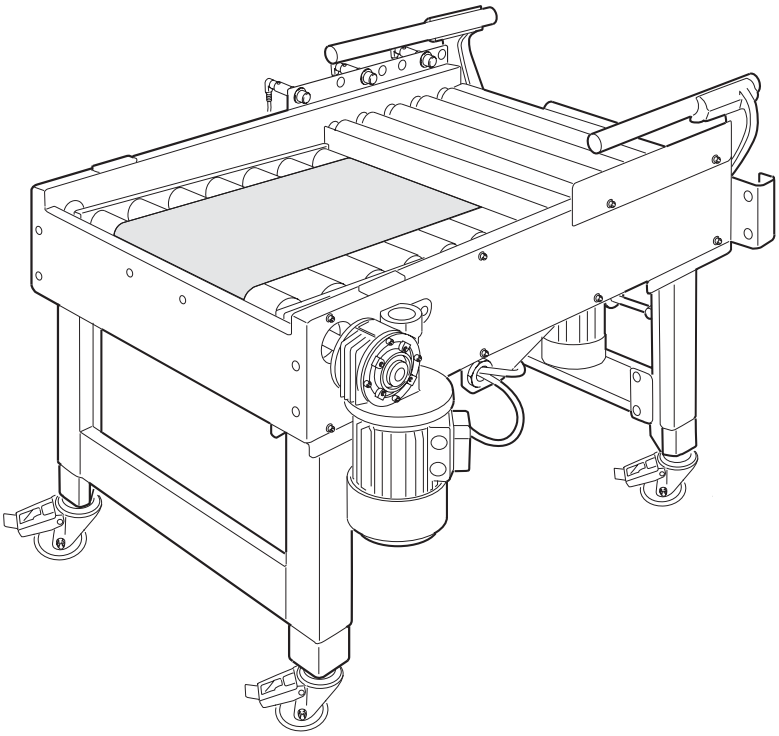

AS24 HD

ALIMENTATORE A TAPPETO
POWER INFEED CONVEYOR
SELECTEUR D'ALIMENTATION MOTORISE
MOTORISIERTE BESCHICKUNGS VORRICHTUNG
ALIMENTADOR CON CINTA TRANSPORTADORA

CATALOGO PEZZI DI RICAMBIO

COME ORDINARE

Per ordinare i pezzi di ricambio si prega di indicare nell'ordine:
MODELLO ESATTO DELLA MACCHINA/NUMERO DI MATRICOLA DELLA MACCHINA/NUMERO DELLA FIGURA DEL CATALOGO RICAMBI IN CUI COMPARE IL PEZZO RICHIESTO/NUMERO DI POSIZIONE DEL PEZZO RICHIESTO NELLA FIGURA/NUMERO DI CODICE DEL PEZZO/DESCRIZIONE DEL PEZZO/QUANTITÁ DESIDERATA
ATTENZIONE: LA MACCHINA VIENE COSTANTEMENTE MIGLIORATA DAI PROGETTISTI, E IL CATALOGO DEI RICAMBI SUBISCE PERIODICI AGGIORNAMENTI. É INDISPENSABILE CHE OGNI ORDINE DI PARTI DI RICAMBIO MENZIONI IL NUMERO DI MATRICOLA DELLA MACCHINA, LEGGIBILE SULLA TARGHETTA METALLICA DI IDENTIFICAZIONE DELLA MACCHINA.
Il costruttore si riserva la facoltà di apportare modifiche alle macchine senza preavviso.

SPARE PARTS CATALOGUE

HOW TO ORDER

When ordering spare parts, please define each part as follows:
MODEL OF MACHINE/SERIAL NUMBER OF MACHINE/NUMBER OF THE FIGURE IN THE SPARE PARTSCATALOGUE IN WHICH THE REQUESTED PARTS APPEARS/NUMBER OF POSITION OF THE REQUESTED PART IN THE FIGURE/PART NUMBER/DESCRIPTION/ DESIRED QUANTITY
WARNING: *THE MACHINE IS CONSTANTLY REVISED AND IMPROVED BY OUR DESIGNERS. THE SPARE PARTS CATALOGUE IS ALSO PERIODICALLY UPDATED. IT IS VERY IMPORTANT THAT ALL THE ORDERS OF SPARE PARTS MAKE REFERENCE TO THE SERIAL NUMBER OF THE MACHINE, WHICH IS PUNCHED ON THE METAL NAME PLATE ON THE MACHINE.*
The manufacturer reserves the right to modify the machine at any time without notice.

CATALOGUE PIECES DETACHEES

COMMENT COMMANDER

Pour commander les pièces de rechange, il est nécessaire d'indiquer dans l'ordre:
MODELE EXACTE DE LA MACHINE/NUMÉRO D'IDENTIFICATION DE LA MACHIN/NUMÉRO DU TABLEAU DANS LE CATALOGUE PIECES DE RECHANGE DANS LEQUEL FIGURE LA PIECE DEMANDÉE/NUMÉRO DE POSITION DANS LE CATALOGUE DE LA PIECE DEMANDÉE
CODE DE LA PIECE/DESCRIPTION/QUANTITÉ DÉSIRÉE
ATTENTION;:La machine est améliorée constamment par des projetteurs, et le catalogue des pièces de rechange subit périodiquement des mises à jour. Il est donc indispensable, que chaque commande de pièces de rechange mentionne le numéro d'identification de la machine, lisible sur la plaque métallique d'identification de la machine.
Le constructeur se réserve le droit d'apporter des modifications aux machines sans préavis aucun.

ERSATZTEILE-KATALOG

ERSATZTEIL-BESTELLUNG

Für die Bestellung der Ersatzteile , müssen folgende Informationen mitgeteilt werden
GENAUES MASCHINENMODELL/
MATRIKELNUMMER DER MASCHINE/BILDNUMMER DES ERSATZTEILEKATALOGES, AUF DEM DAS GEFRAGTE TEIL BGEBILDET IST/ POSITIONSNUMMER DES GEFRAGTEN TEILES AUF DEM BILD/BESTELLNUMMER DES ERSATZTEILE/BESCHREIBUNG DES ERSATZTEILES/ GEWÜNSCHTE MENGE
ACHTUNG: *DIE QUALITÄT UND SICHERHEIT DER MASCHINE WIRD VON DER ENTWICKLUNGSARBEIT STÄNDIG VERBESSERT. DER ERSATTEILE KATALOG WIRD PERIODISCH AKTUALISIERT. ES IST DAHER NOTWENDIG, DAß ALLE ERSATZTEIL-BESTELL GEN IMMER DIE MATRIKELNUMMER ERWÄHNEN, DIE AUF DEM METALLSCHILD DER MASCHINE STEHT.*
Der Hersteller behält sich die Möglichkeit vor, eventuelle Änderungen an der Maschine ohne Vorabinformation durchzuführen.

CATALOGO PIEZAS DE RECAMBIO

COMO PEDIR

Para pedir las piezas de recambio se ruega indicar en el pedido:
MODELO EXACTO DE LA MÁQUINA/ NÚMERO DE MATRÍCULA DE LA MÁQUINA/NÚMERO DE LA FIGURA DEL CATÁLOGO RECAMBIOS EN LOS QUE APARECE LA PIEZA PEDIDA/ NÚMERO DE POSICIÓN DE LA PIEZA SOLICITADA EN LA FIGURA/ NÚMERO DE CÓDIGO DE LA PIEZA/ DESCRIPCIÓN DE LA PIEZA/CANTIDAD DESEADA
ATENCIÓN!: LA MÁQUINA ES CONSTANTEMENTE MEJORADA POR LOS PROYECTISTAS, POR LO QUE EL CATÁLOGO DE RECAMBIOS ES ACTUALIZADO PERIÓDICAMENTE. ES INDISPENSABLE QUE TODOS LOS PEDIDOS DE PIEZAS DE RECAMBIO HAGA N MENCI DEL NÚMERO DE MATRÍCULA DE LA MÁQUINA, LEGIBLE EN LA PLACA METÁLICA DE IDENTIFICACIÓN DE LA MÁQUNA.
El fabricante se reserva la facultad de aplicar modificaciones a las máquinas sin previo aviso.

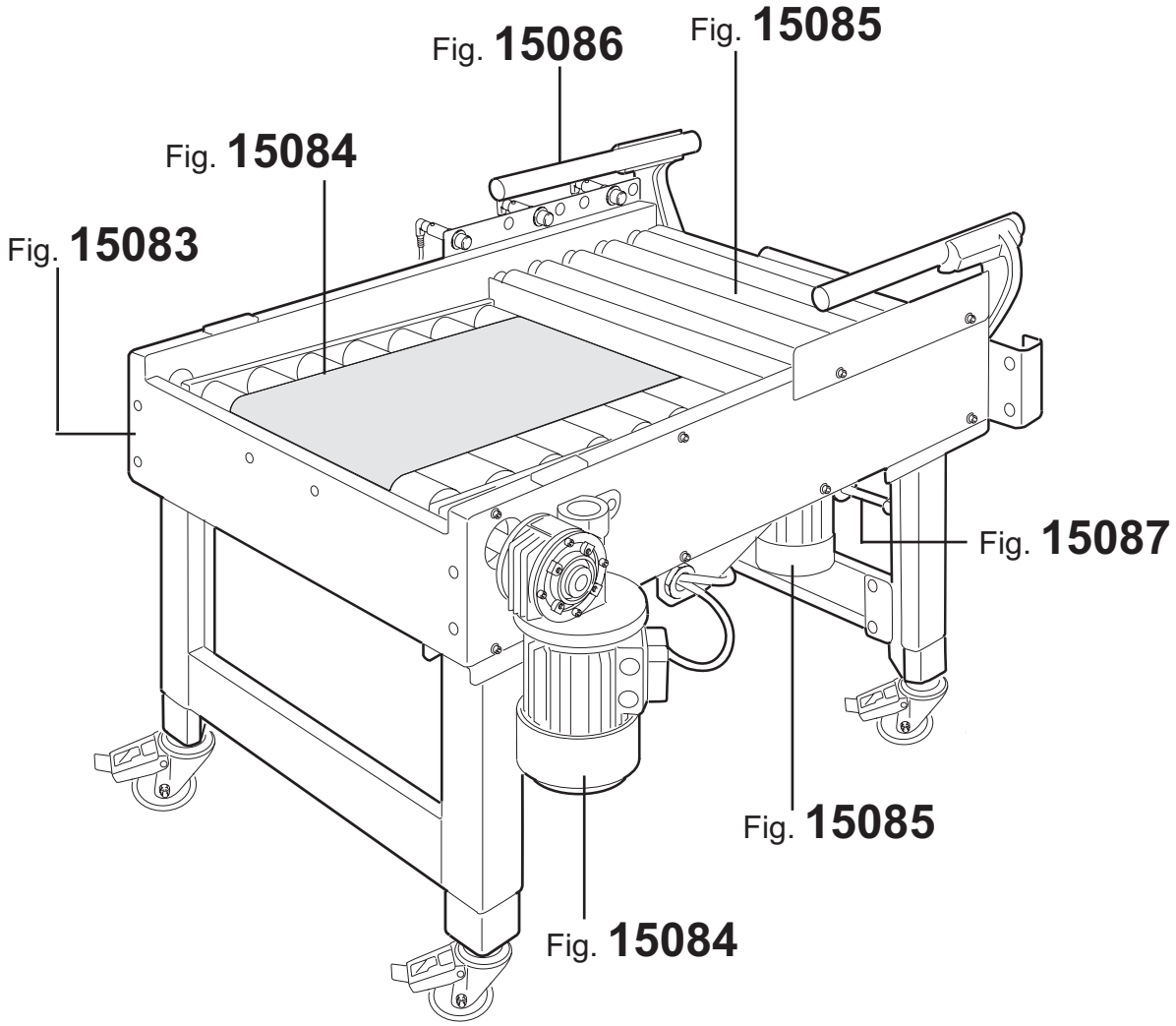
Fig. 15086
Fig. 15085
Fig. 15084
Fig. 15083
Fig. 15087
Fig. 15085
Fig. 15084

Fig. 15083 BANCALE SEI0000582 AS24 HD ALIMENTATORE

Pos.	Q.tà	Codice	Descrizione
1	1	S450567547Z	BANCALE ASSEMBL.CON INSERTI
2	2	SBA0006155	GAMBA SX ASS. AS24 HD
3	2	SBA0006154	GAMBA DX ASS. AS24 HD
4	2	S440319747B	GAMBA SX H=350 COMP. VERN.
5	2	S440319647B	GAMBA DX H=350 COMP. VERN.
6	4	S440172317Z	GAMBA SCORREVOLE GRIGIO METAL. H=350
7	4	S320085893Z	MORSETTO FILETTATO SM/XL/3M
8	4	S320146493Z	STAFFA SPEC. PER TRAVERSA AS24 SM48/481
9	10	S340058493Z	VITE TCEI M8X16 ZINCATA
10	4	S3401501ZZZ	RUOTA /80 POLIDERNYL
11	4	S320245593Z	DISTANZIALE PER RUOTE SM481
12	4	S320145093Z	RONDELLA SPECIALE /12/45,5X4
13	4	S340006293Z	RONDELLA PIANA PER VITE M12 ZINC.
14	4	S340073593Z	DADO AUTOBLOCCANTE M12 ZINCATO
15	4	S300111696A	RIGHELLA MILLIMETRATA SM/XL STANDARD 350/890
16	4	S320212393Z	PIASTRINA PER GAMBA AS22 ZINC.
17	8	S340012293Z	VITE TCEI M8X20 ZINCATA
18	2	S450529547Z	TRAVERSA PER GAMBE C/INS.
19	8	S340012393Z	RONDELLA PIANA PER VITE M8 ZINC
20	1	S440709298BT	FERMASCATOLA AS24 INOX ASS.
21	1	SBC0009611V	CARTER LATERALE DX AS24 HD
22	1	SBC0009612V	CARTER LATERALE SX AS24 HD
23	10	S340031893Z	VITE TCEI M5X12 ZINCATA
24	4	S340011293Z	VITE TCEI M5X16 ZINCATA
25	14	S340006193Z	RONDELLA PIANA PER VITE M5 ZINCATA
27	1	S320254547B	SUPPORTO FOTOCELLULE AS24
28	1	S320254647Z	SUPPORTO CATADIOTTRI AS24
29	3	S3804198ZZZ	FOTOCELLULA E3F2-R2B4-P1-E SM/XL
30	3	S3802029ZZZ	CATARINFRANGENTE E39-R1 SM44
31	6	S340002993Z	VITE TE M4X10 ZINCATA
32	6	S340004393Z	RONDELLA PER VITE M4 ZINC.
33	6	S340000193Z	DADO M4 ZINCATO
35	1	S320174998A	PROTEZIONE PER ALIM. AS22 INOX
36	3	S340083093Z	VITE TCBCR AUTOFIL. 7SPX8 ZINCATA
37	1	S320316293Z	SUPPORTO RULLO ESTERNO
38	10	S330535693Z	VITE TE M6X12 SPEC.
39	1	S4701975ZZZ	RULLO /32X198 X AS24 -2000CTD CON PERNO
40	1	S3100610ZZZ	ANELLO A SCATTO
41	2	S321176147A	STAF DI CONNECTION AS24/560-SM44
42	4	S340004893Z	VITE TSVEI M8X16 ZINCATA
43	8	S340017593Z	RONDELLA PIANA PER VITE M6 ZINC.
44	4	S320443347Z	PIASTRINA DI CHIUSURA AS24
45	4	S310058105Z	PIEDINO
46	4	S340028093Z	VITE TE M8X20 ZINC.
47	4	S340065593Z	RONDELLA TRIPLA PER VITE M8 ZINC.
48	4	S340028393Z	DADO AUTOB. M8 BASSO ZINCATO

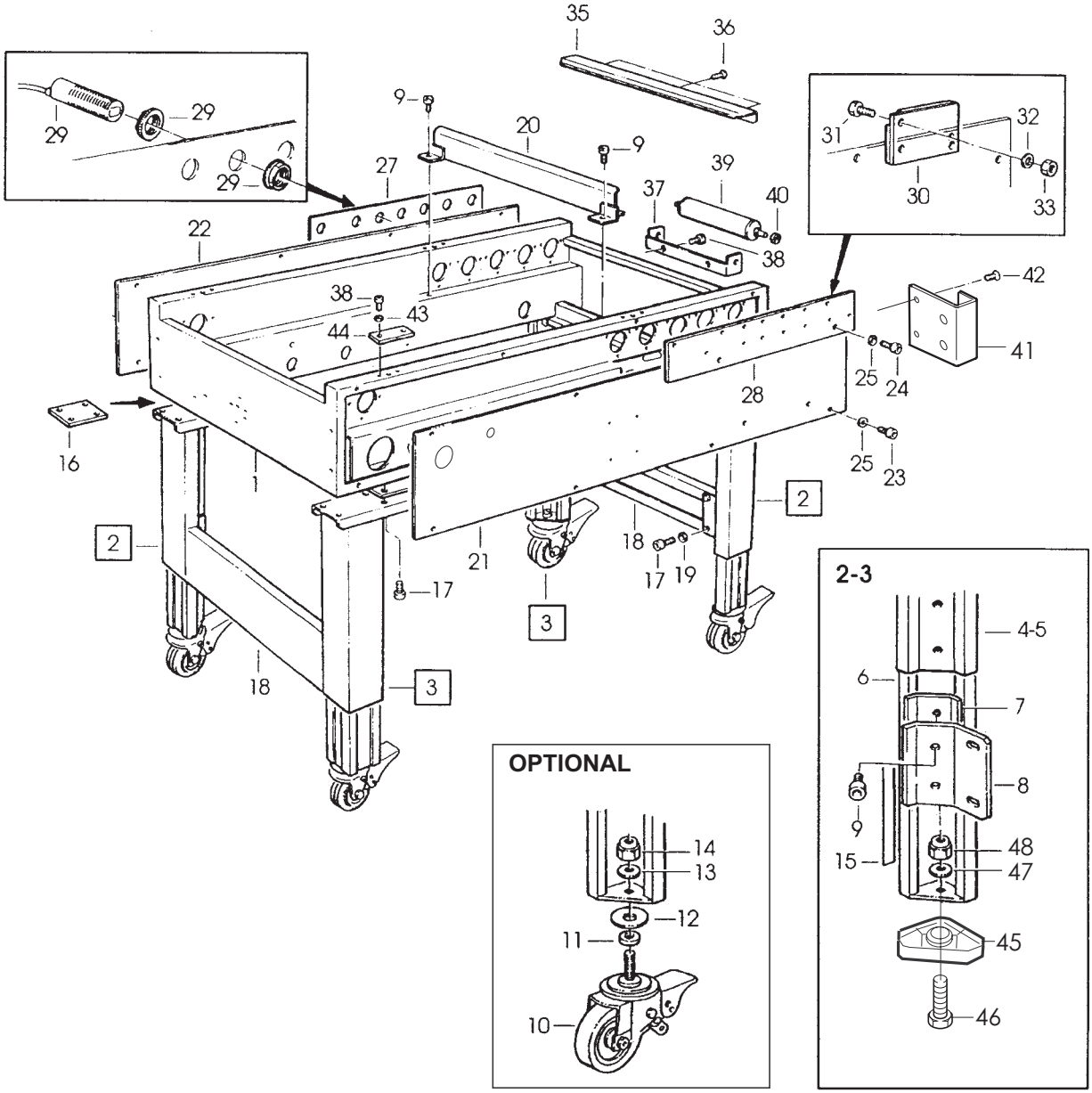
35
36
29
29
29
9
20
9
27
39
37
40
31
32
30
33
22
38
38
43
44
42
41
25
24
28
16
1
25
23
2
2
21
18
17
19
17
3
18
3
2-3
4-5
6
7
8
9
15
48
47
45
46
OPTIONAL
14
13
12
11
10

Fig. 15084 TAPPETO MOTORIZZATO SEI0000582 AS24 HD ALIMENTATORE

Pos.	Q.tà	Codice	Descrizione
1	1	SBC0008754	ALBERO PER MOTORIDUTTORE BONFIGLIOLI
2	1	S321089717A	SPALLA DESTRA SOLLEVATORE AS24
3	2	SCA0000789	UNITA' DI BLOCCAGGIO TLK 110 20X28
4	1	S3401590ZZZ	TAPE SA9 BE/AZ 300X1085 AS24 CON PROFILO
5	1	SBC0008798	RULLO PER MOTORIZZAZIONE TAPPETO
6	10	S4304988ZZZ	RULLO INTERMEDIO AS24/560
7	6	S330901993Z	DISTANZIALE PER RULLI FOLLI AS24
8	1	S3400238ZZZ	LINGUETTA 6X6X20
9	10	S330595393Z	RONDELLA /15,2/26X1 ZINC.
10	2	S340025793Z	VITE TE M6X55 ZINCATA
11	2	S340017593Z	RONDELLA PIANA PER VITE M6 ZINC.
12	1	S321089817A	SPALLA SINISTRA SOLLEVATORE AS24
13	10	S340012393Z	RONDELLA PIANA X VITE M8 ZINC.
14	10	S340058493Z	VITE TCEI M8X16 ZINC.
15	1	SBC0008756	DISTANZIALE /20-/25X9,5
16	4	S340005393Z	VITE TSVEI M6X16 ZINCATA
17	2	S3401577ZZZ	CUSCINETTO 61904 2Z
18	2	S3312696ZZZ	SUPPORTO CUSCINETTO AS24
19	2	SBC0008755T	DISTANZIALE /20 -/25X48,5
20	6	S340025893Z	DADO AUTOBLOCCANTE M6 ZINC.
21	2	S4304619ZZZ	FLANGIA COMP. AS24
22	6	S340057793Z	VITE TCEI M6X16 ZINC.
23	1	SBC0009610T	PERNO PER BRACCIO DI REAZIONE AS24 HD
24	4	S340005193Z	VITE TCEI M6X12 ZINC.
25	4	S340000693Z	RONDELLA DENTELLATA PER VITE M6
26	1	S440755847A	ARM. REAZ. X MVP44 AS. FHM11-SM116 VER.
27	1	SBC0008757T	DISTANZIALE /18-/25X5
28	1	S310108548Z	AMMORTIZZATORE PER PORTALAMA K13-K14/3M
29	1	SCA0000808	RIDUTTORE VF44 P1 7 P63 B5 B3 PENDOLARE
30	1	S3803442ZZZ	MOTORE H63 A4 B5 KW0.13 200 V 50/60 HZ 220 V
30	1	S3803440ZZZ	MOTORE H63 A4 B5 220/240V- 380/415 50 HZ
30	1	S3800454ZZZ	MOTORE H63 A4 B5 260v-440v 50 HZ RF 0,13 KW
31	1	S330958393Z	RONDELLA CENTRATORE AS24 ZINC.
32	1	S340004893Z	VITE TSVEI M8X16 ZINC.
33	1	S332249392A	ALBERO TENDITORE AS24/560 BRUN.
34	1	S4305125ZZZ	RULLO FOLLE CON CUSCINETTI AS24/560
35	5	S331249292Z	PERNO PER RULLI CENTRALE
36	1	S340028393Z	DADO AUTOBLOCCANTE M8 ZINC.
37	1	S340012393Z	RONDELLA PIANA PER VITE M8 ZINC.

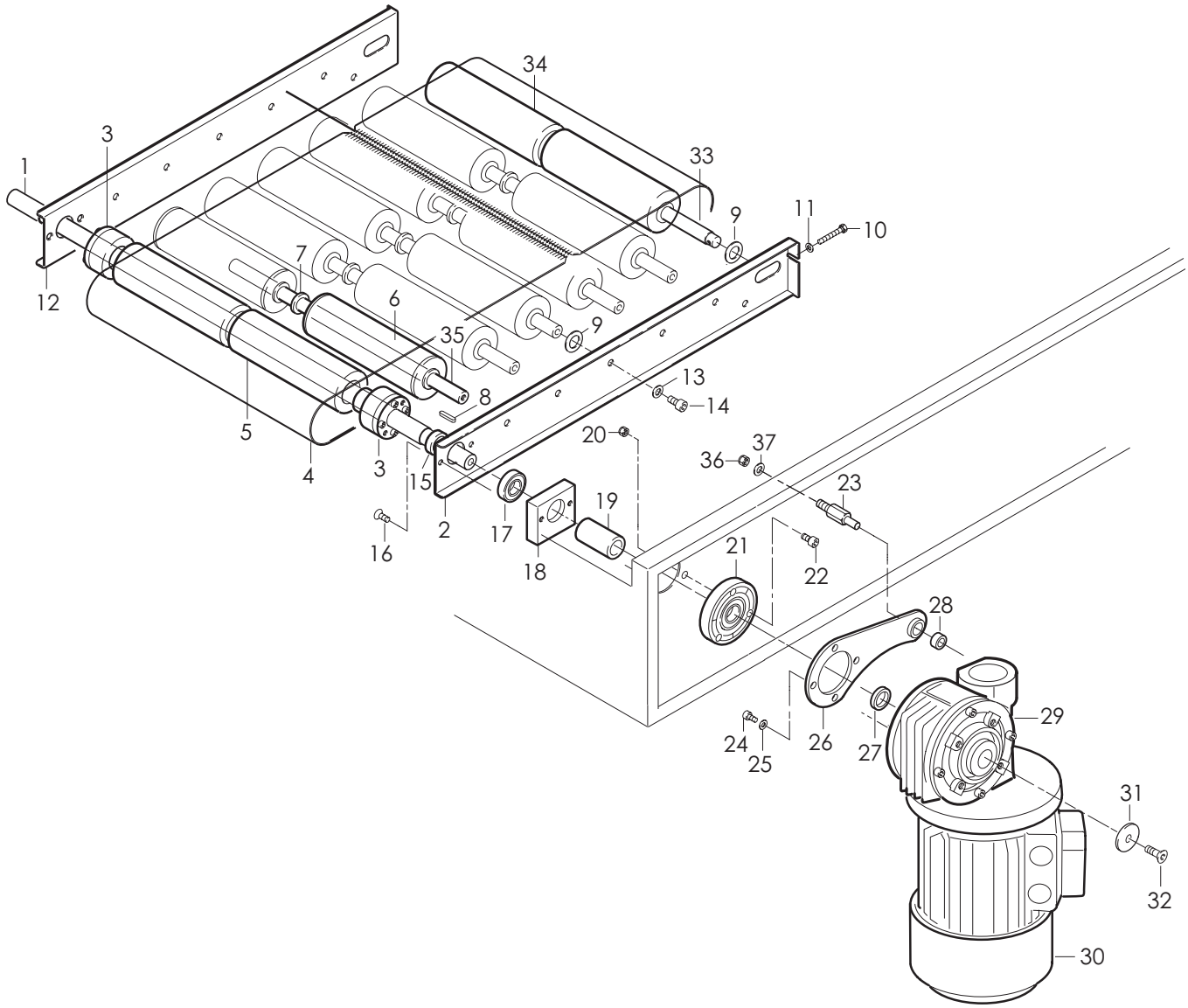
34
3
1
33
9
11
10
7
12
6
9
35
13
8
14
5
20
37
36
4
3
15
23
19
2
17
16
18
21
22
28
29
24
25
26
27
31
32
30

Fig. 15085 MOTORIZZAZIONE RULLI SEI0000582 AS24 HD ALIMENTATORE

Pos.	Q.tà	Codice	Descrizione
1	1	S3803018ZZZ	RIDUTTORE VF44 F1 P63 B5 B3 C/FLANGIA
2	1	S330788392Z	PERNO PER RIDUTTORE /24X171,5
3	2	S3400238ZZZ	LINGUETTA 6X6X20
4	1	S330007093Z	DADO ALTO M18X1 ZINCATO
5	8	S340005893Z	VITE TE M8X25 ZINCATA
6	8	S340012393Z	RONDELLA PIANA PER VITE M8 ZINC.
7	8	S340011693Z	DADO BASSO M8 ZINC.
8	4	S340006392Z	RONDELLA EL. GROWER DIN 7980 X VITE M8
9	1	S330766392Z	PIGNONE PER RIDUTTORE Z=16 3/8
10	1	S340059992Z	GRANO EIPP M6X8 BRUN.
11	1	S330788192Z	PERNO TENDICATENA ES. 30X83,5
12	1	S330733793Z	RONDELLA /10,5-30X5
13	1	S340043893Z	DADO AUTOBLOCCANTE M10 BASSO
14	1	S330766292Z	PIGNONE TENDICATENA Z=15 3/8"
15	2	S340039692Z	ANELLO DI ARRESTO 28 DIN 472
16	2	S3400166ZZZ	CUSCINETTO 6001 - 2RS
17	1	S340003393Z	RONDELLA TRIPLA PER VITE M6 ZINC.
18	1	S340002193Z	VITE TE M6X12 ZINCATA
19	1	S3100776ZZZ	PATTINO POLIZ. X CATENA C/FORI
20	2	S340057793Z	VITE TCEI M6X16 ZINCATA
21	2	S340017593Z	RONDELLA PIANA PER VITE M6 ZINC.
22	30	S340090093Z	VITE TE M4X14 ZINCATA
23	30	S340004393Z	RONDELLA PIANA PER VITE M4 ZINC.
24	30	S340000193Z	DADO M4 ZINCATO
25	6	S3401064ZZZ	LINGUETTA 4X4X15
26	5	S330766492Z	PIGNONE PER RULLO Z=17 3/8"
27	5	S340093192Z	GRANO EIPP M5X14
28	1	S3401208ZZZ	SPEZZ. CATENA RE C121 P=3/8" L=81 PASSI
29	20	S340061592Z	GRANO EIPP M5X5 BRUNITO
30	1	S332000290A	ALBERO X 2 PIGNONI AS24 FOSF.
31	4	S332000190A	ALBERO PER 1 PIGNONE FOSFAT.
32	1	S430494785Z	RULLO GOMMATO COMP. AS24
33	4	S4304947ZZZ	RULLO PER ALIM. ASS.
34	10	S4707224ZZZ	FLANGIA PER RULLI ASS. AS24
35	1	S3803442ZZZ	MOTORE H63 A4 B5 KW0.13 200 V 50/60HZ 220 V
35	1	S3803440ZZZ	MOTORE H63A4 B5 220/240V-380/415V 50HZ
35	1	S3800454ZZZ	MOTORE H63 A4 B5 260V-440V 50HZ 3F 0.13 KW

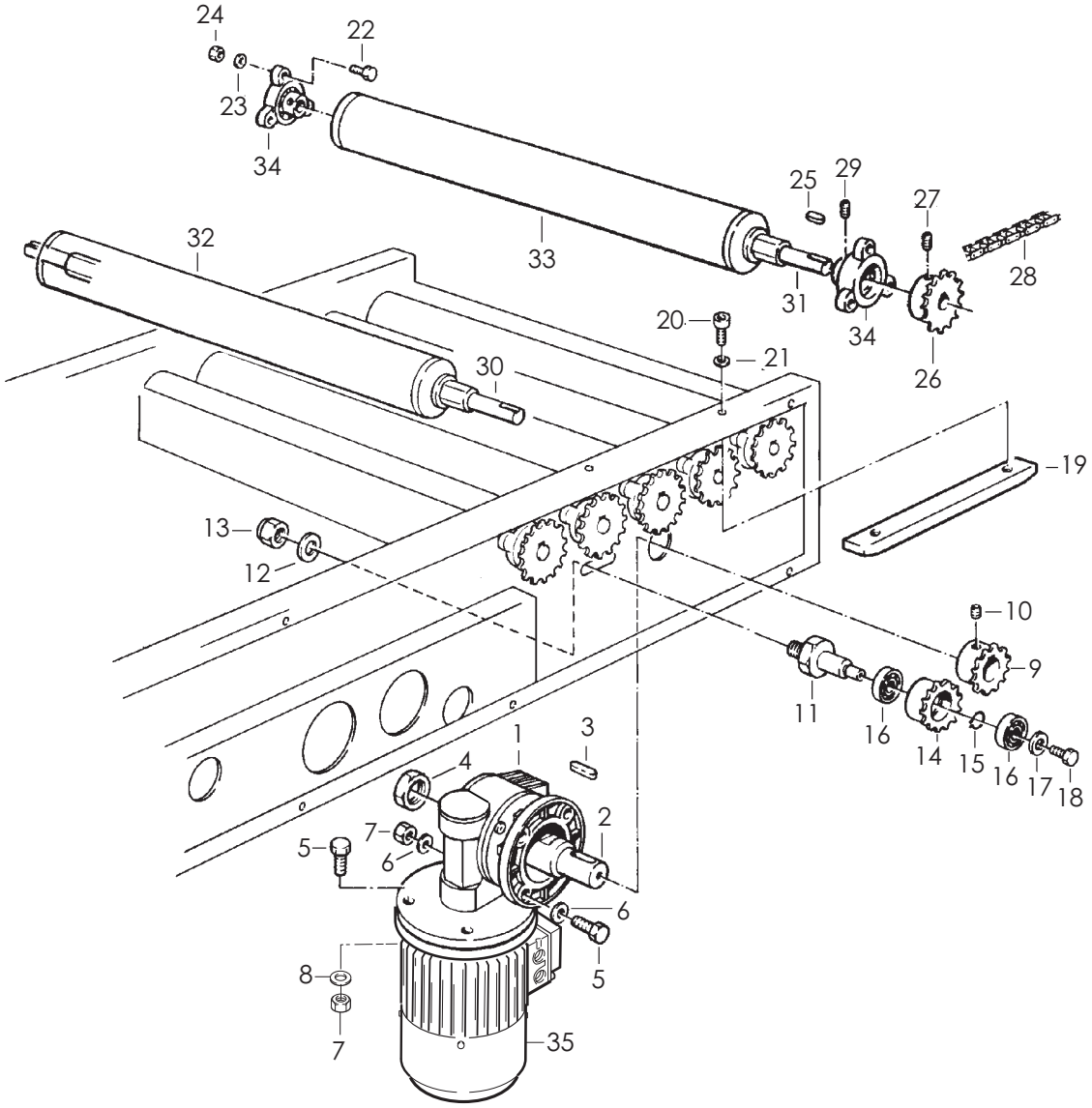
24
22
23
34
25
29
27
32
33
28
31
34
20
21
26
30
19
13
12
10
9
11
16
14
15
16
17
18
1
3
4
2
7
5
6
6
5
8
7
35

Fig. 15086 CENTRATORE SEI0000582 AS24 HD ALIMENTATORE

Pos.	Q.tà	Codice	Descrizione
1	1	S450529647Z	CASSONETTO C/INSERTI AS24/560
2	4	S3400156A	CUSCINETTO 6005 - 2RS1
3	2	S330958292Z	ALBERO PER LEVE CENTRATORE BR. AS24
4	2	S3400238ZZZ	LINGUETTA 6X6X20
5	2	S3400641ZZZ	LINGUETTA 6X6X25
6	2	S330958693Z	DISTANZIALE X CUSCIN. AS25 ZINC.
7	2	S330958793Z	PIGNONE CON MOZZO 3/8" Z=20 ZINCATO
8	2	S340059992Z	GRANO EIPP M6X8 BRUN.
9	1	S3400946ZZZ	SPEZZONE CATENA P=3/8" L=41 PASSI XL34 APERTI
10	1	S3403481ZZZ	SPEZZONE CATENA P=3/8" L=31 PASSI APERTI
11	1	S330560493Z	BLOCCHETTO FISS. CATENA
12	2	S320103793Z	TIRANTE X CATENA SM/XL/3M
13	2	S340090592Z	ANELLO DI SICUREZZA 3,2 DIN 6799
14	2	S330560593Z	RONDELLA /3/10X3 ZINCATA
15	1	S330618592Z	VITE SPEC. TC M3X25
16	4	S340101493Z	DADO AUTOBLOCCANTE M3 ZINCATO
17	1	S330589993Z	FORCELLA DESTRORSA SM4/F-104
18	2	S330560393Z	FORCELLA SINISTRORSA F - 104
19	3	S330618492Z	VITE SPEC. TC M3X20
20	2	S330560293Z	VITE TENDICAT. DX/SX SM4/F-104
21	2	S340000293Z	DADO M6 ZINCATO
22	4	S350076593Z	DISTANZIALE FISSAGGIO CARTER ES. 10X42 AS24
23	1	S320482747Z	CARTER CASSONETTO AS24/560
24	4	S340002693Z	VITE TE M6X16 ZINCATA
25	4	S340017593Z	RONDELLA PIANA X VITE M6 ZINC.
26	2	S330958593Z	DISTANZIALE X CUSCIN. AS24 ZINC.
27	1	S350018640Z	LEVA CENTRATORE DX AS24 GIALLO
28	1	S350018740Z	LECA VENTRATORE SX AS24 GIALLO
29	2	S330958393Z	RONDELLA CENTRATORE AS24 ZINC.
30	2	S340004893Z	VITE TSVEI M8X16 ZINCATA
31	2	S330958193Z	TUBO CENTRATORE AS24 ZINC.
32	2	S320253393Z	PIASTRINA PER FISSAGGIO TUBI AS24
33	4	S340057793Z	VITE TCEI M6X16 ZINCATA
34	4	S340094905Z	TAPPO PER GUIDE
35	1	S340101693Z	TESTA A SNODO M12X1.25 ZINCATA
36	1	S340174193Z	VITE TE M12X5 META' FILETTO AS24
37	2	S340006293Z	RONDELLA PIANA PER VITE M12 ZINC.
38	1	S340073593Z	DADO AUTOBLOCCANTE M12 ZINCATO
39	6	S340012293Z	VITE TCEI M8X20 ZINCATA
40	6	S340012393Z	RONDELLA PIANA X VITE M8 ZINC.
41	1	S380606700A	FLANGIA OSCILLANTE SNCB-40 AS24/560

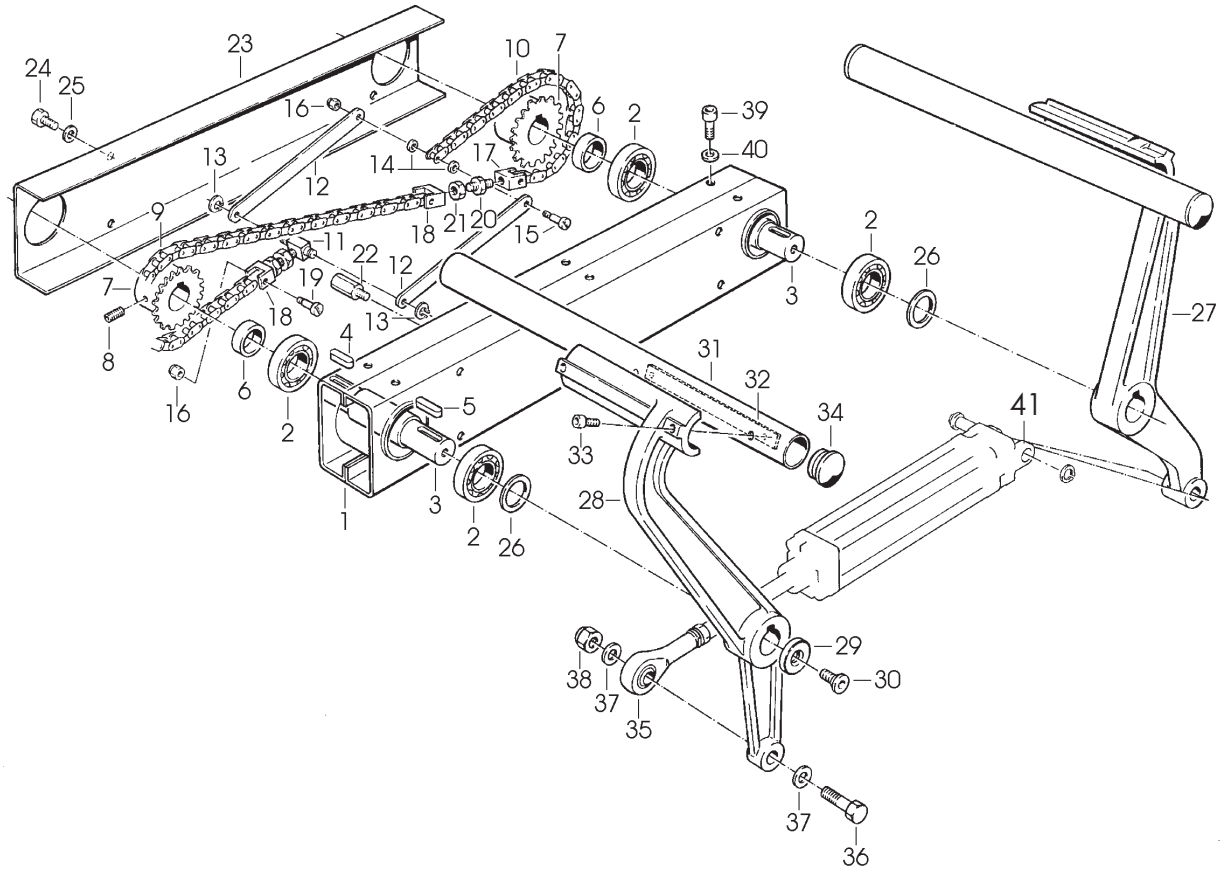
23
24
25
10
7
16
6
2
39
40
13
12
14
17
9
18
21
20
15
11
22
12
19
7
18
13
4
8
6
16
2
5
1
3
2
26
31
32
34
33
28
41
2
26
3
27
29
30
38
37
35
37
36

Fig. 15087 IMPIANTO PNEUMATICO SEI0000582 AS24 HD ALIMENTATORE

Pos.	Q.tà	Codice	Descrizione
1	1	S380606600A	CILINDRO DNC-40-170-PPV-A AS24/560
2	1	S380606700A	FLANGIA OSCILL. SNCB-40 AS24/560
3	2	SCB0000418	CILINDRO COMPATTO ADNP-50-15-A-P-A-QS-6
4	2	S380630300A	FLANGIA OSCILL. SNCB-50 SM446 FESTO
5	2	S3802289ZZZ	RACCORDO A G OMITO 31990813
6	2	S3800713ZZZ	RACCORDO A T INT. 31040600
7	2	S340115193Z	TESTA A SNODO KA 10 D ZINC.
8	2	S340018792Z	ANELLO DI ARRESTO 10 DIN 471 BRUN.
9	2	SBC0009033T	PERNO PER CILINDRO INF. AS24
10	2	S340013592Z	ANELLO DI ARRESTO X ALBERO BRUN.
11	2	SBA0006303V	SUPPORTO INF. CILINDRO ASS. AS24
12	1	S340101693Z	TESTA A ASNODO M12X1,25 ZINC.

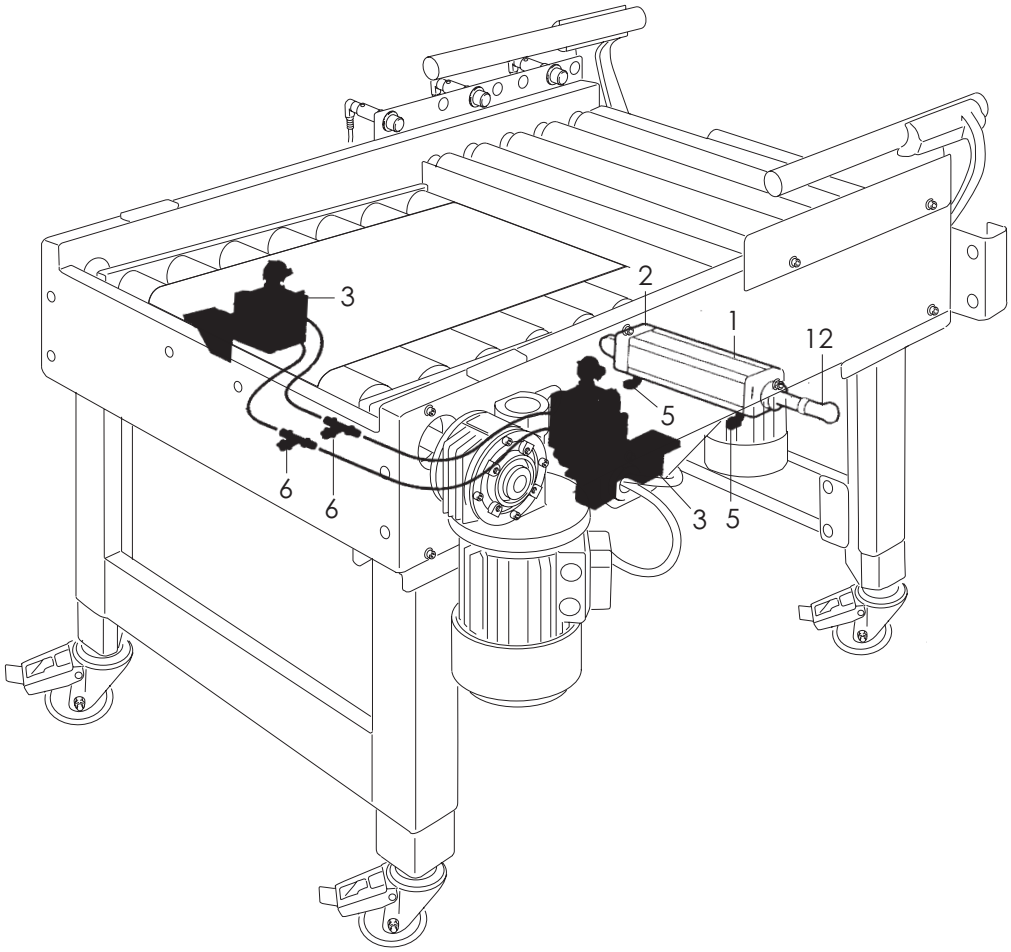
3
2
1
12
5
6
6
3
5

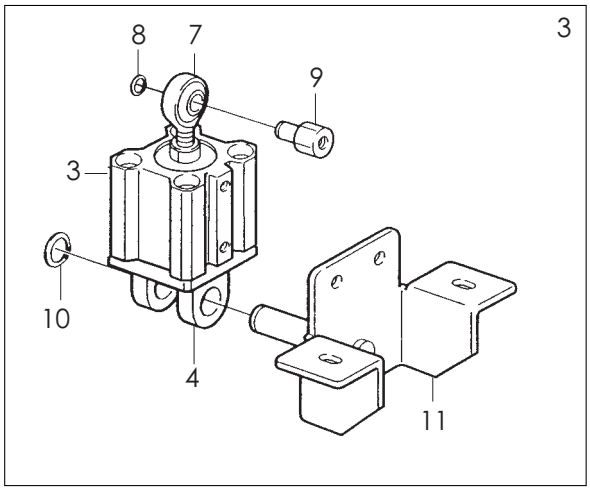
3
8
7
9
3
10
4
11

SIAT
M. J. MAILLIS GROUP

Declaration of Conformity

Déclaration de conformità
Declaración de conformidad
Konformitätserklärung
Dichiarazione di conformità
Conformiteitsverklaring
Försäkran om överensstämmelse
Declaração de conformidade

CE

The undersigned / le fabricant / el que subscribe / der Unterzeichnete / la sottoscritta / Ondergetekende / Untertecknad / os que se subscrevem:

SIAT SpA – Società Internazionale Applicazioni Tecniche
Via Giancarlo Puecher, 22 - 22078 Turate (CO) – ITALY

hereby certifies that, when leaving our factory, the product indicated below is in accordance with the EEC guidelines, EEC standards of safety and product-specific EEC standards.

declare que la machine designée ci-dessous est conforme aux dispositions de la directive "machines midifiée et aux legislations nationales la transposant.

declara bajo su propia responsabilidad que la presente mercancia, objeto de la presente dclaración, cumple con todas las exigencias de las normas de la Comunidad Europea, en lo que a normas técnicas, de homologación y de seguridad se refiere.

bestätigt, daß das nachfolgend bezeichnete Gerät in der von uns in Verkehr gebrachten Ausführung die Anforderungen EG-Richtlinien, EGSicherheitsstandards und produktspezifischen EG-Standards erfüllt.

certifica che il prodotto qui sotto indicato, nel modello da noi commercializzato, è conforme alle direttive CE nonchè agli standard di sicurezza e agli standard relativi ai singoli prodotti.

bevestigt, dat het volgende genoemde apparaat in de door ons in de handel gebrachte uitvoering voldoen aan de eis van, en in overeenstemming zijn met de EG-richtlijnen, de EG-veiligheids-standaard en de voor het produkt specifieke EG-standaard.

försäkrar härmed att nedan nämnda produkter överensstämmer med EEC: s riktlinjer, ECC:s säkerhetsstandard och EEC:s produktspecifikation.

por este meio certifacam que ao sairem da fábrica, o aparelho abaixo mencionado cumprem tanto ne execução com as exigências das directrizes harmonizadas da CEE, com os parâmetros de segurança standard da CEE e, com os parâmetros especificos de produçao por nós.

Description of the product Description du produit Descripción de la mercancia Bezeichnung der Gerät Descrizione del prodotto Omschrijving van het apparaat/de apparaten Produkt Descrição do aparelho	**Automatic Case Sealer – Random Size Case** **Nastratrice automatica - autodimensionante**
Model: Modèle: Modelo: Modell: Modello: Model: Modell: Modelo:	**SM44**
Serial Number: Numéro de matricule: Número de matrícula: Matrikel Nummer: Numero di matricola: Serie nummer: Serie nummer: Numero de matrícula:	**SEB.....**
EEC guidelines: directives europeennes: normas CE: EG-Richtlinien: direttive CE: EG-richtlijnen: directrizes da CEE:	2006/42/CE 2004/108/CE

Name and address of the person authorized to compile the technical file referred to in Annex VII A of Directive 2006/42/EC
Nom et adresse de la personne autorisée à constituer le dossier technique visé à l'annexe VII A de la directive 2006/42/CE
Nombre y dirección de la persona facultada para elaborar el expediente técnico contemplado en el anexo VII A de la Directiva 2006/42/CE
Name und Anschrift der Person, die bevollmächtigt, die technischen Unterlagen gemäß Anhang VII A der Richtlinie 2006/42/EG zu kompilieren
Nome e indirizzo della persona autorizzata a costituire il Fascicolo Tecnico di cui all'allegato VII A della Direttiva 2006/42/CE
Naam en adres van de persoon die gemachtigd is het technisch dossier als bedoeld in bijlage VII A van Richtlijn 2006/42/EG samen te stellen
Nome e endereço da pessoa autorizada a compilar o processo técnico referido no anexo VII A da Directiva 2006/42/CE

SIAT SpA – Società Internazionale Applicazioni Tecniche Via Giancarlo Puecher, 22 - 22078 Turate (CO) – ITALY

Turate, 26/10/2012

Stefano Mele
Managing Director

SIAT
M. J. MAILLIS GROUP

Declaration of Conformity
Déclaration de conformità
Declaración de conformidad
Konformitätserklärung
Dichiarazione di conformità
Conformiteitsverklaring
Försäkran om överensstämmelse
Declaração de conformidade

CE

The undersigned / le fabricant / el que subscribe / der Unterzeichnete / la sottoscritta / Ondergetekende / Untertecknad / os que se subscrevem:

SIAT SpA – Società Internazionale Applicazioni Tecniche
Via Giancarlo Puecher, 22 - 22078 Turate (CO) – ITALY

hereby certifies that, when leaving our factory, the product indicated below is in accordance with the EEC guidelines, EEC standards of safety and product-specific EEC standards.

declare que la machine designée ci-dessous est conforme aux dispositions de la directive "machines midifiée et aux legislations nationales la transposant.

declara bajo su propia responsabilidad que la presente mercancia, objeto de la presente dclaración, cumple con todas las exigencias de las normas de la Comunidad Europea, en lo que a normas técnicas, de homologación y de seguridad se refiere.

bestätigt, daß das nachfolgend bezeichnete Gerät in der von uns in Verkehr gebrachten Ausführung die Anforderungen EG-Richtlinien, EGSicherheitsstandards und produktspezifischen EG-Standards erfüllt.

certifica che il prodotto qui sotto indicato, nel modello da noi commercializzato, è conforme alle direttive CE nonchè agli standard di sicurezza e agli standard relativi ai singoli prodotti.

bevestigt, dat het volgende genoemde apparaat in de door ons in de handel gebrachte uitvoering voldoen aan de eis van, en in overeenstemming zijn met de EG-richtlijnen, de EG-veiligheids-standaard en de voor het produkt specifieke EG-standaard.

försäkrar härmed att nedan nämnda produkter överensstämmer med EEC: s riktlinjer, ECC:s säkerhetsstandard och EEC:s produktspecifikation.

por este meio certifacam que ao sairem da fábrica, o aparelho abaixo mencionado cumprem tanto ne execução com as exigências das directrizes harmonizadas da CEE, com os parâmetros de segurança standard da CEE e, com os parâmetros especificos de produçao por nós.

Description of the product
Description du produit
Descripción de la mercancia
Bezeichnung der Gerät
Descrizione del prodotto
Omschrijving van het apparaat/de apparaten
Produkt
Descrição do aparelho

Motorized Conveyor

Alimentatore a nastro motorizzato

Model:
Modèle:
Modelo:
Modell:
Modello:
Model:
Modell:
Modelo:

AS24

Serial Number:
Numéro de matricule:
Número de matrícula:
Matrikel Nummer:
Numero di matricola:
Serie nummer:
Serie nummer:
Numero de matrícula:

SEI.....

EEC guidelines:
directives europeennes:
normas CE:
EG-Richtlinien:
direttive CE:
EG-richtlijnen:
directrizes da CEE:

2006/42/CE
2004/108/CE

Name and address of the person authorized to compile the technical file referred to in Annex VII A of Directive 2006/42/EC
Nom et adresse de la personne autorisée à constituer le dossier technique visé à l'annexe VII A de la directive 2006/42/CE
Nombre y dirección de la persona facultada para elaborar el expediente técnico contemplado en el anexo VII A de la Directiva 2006/42/CE
Name und Anschrift der Person, die bevollmächtigt, die technischen Unterlagen gemäß Anhang VII A der Richtlinie 2006/42/EG zu kompilieren
Nome e indirizzo della persona autorizzata a costituire il Fascicolo Tecnico di cui all'allegato VII A della Direttiva 2006/42/CE
Naam en adres van de persoon die gemachtigd is het technisch dossier als bedoeld in bijlage VII A van Richtlijn 2006/42/EG samen te stellen
Nome e endereço da pessoa autorizada a compilar o processo técnico referido no anexo VII A da Directiva 2006/42/CE

SIAT SpA – Società Internazionale Applicazioni Tecniche Via Giancarlo Puecher, 22 - 22078 Turate (CO) – ITALY

Turate, 08/2/2013

Stefano Mele
Managing Director