SIAT

M. J. MAILLIS GROUP

SM44 HS

NASTRATRICE AUTOMATICA

AUTOMATIC CASE SEALING MACHINE

MACHINE ENRUBANNEUSE AUTOMATIQUE

AUTOMATISCHE KARTONVERSCHLIESSMASCHINE

PRECINTADORA AUTOMATICA

MANUALE DI ISTRUZIONI E PARTI DI RICAMBIO

INSTRUCTIONS MANUAL AND SPARE PARTS LIST

MANUAL D'INSTRUCTIONS ET PIECES DETACHEES

BEDIENUNGSANLEITUNG UND ERSTAZTEILLISTE

MANUAL DE INSTRUCCIONES Y RECAMBIOS

CE

Cod. pubbl.: SMB00087K.1

Instruction manual for the use, maintenance, safety, shipment, storage, unpacking, set-up, repairing, trouble shooting, spare parts and disposal concerning the case sealing machine model SM44 HS.

This publication is property of SIAT S.P.A.
Via Puecher, 22 - 22078 TURATE (CO) - ITALY
Tel. 02-964951 - Fax. 02-9689727

Edition: February 2016

The reproduction of this manual is strictly forbidden.
All rights reserved ©Siat S.p.A. 2016

The manufacturer reserves the right to modify the product at any time without notice.

Publication n. SMB00087K.1
Version 1

SM44 HS

AUTOMATIC CASE SEALING MACHINE WITH DRIVE SIDE BELTS

- Maximum box size: **h.** 500 mm x **w.** 500 mm x **l** 600 mm
- Minimum box size: **h.** 140 mm x **w.** 160 mm x **l** 200 mm
- Adhesive tape: **w.** 50/70 mm
- Belt speed: 30 m/min.
- Production: 13-15 boxes/min
- Average air consumption: 180 Nl/min approximately

INDEX

	Section
Manufacturing specifications	1.1
Manual, how to use the	1.2
Safety	3
Serial Number	2.1
After-sale service	2.2
Warranty	2.3
Operators' skill levels	3.6
Technical specifications	4.2
Dimensions	4.6
Transportation	5
Unpacking	6
Installation	7
Controls	8
Operation	9
Safety devices	10
Set-up and adjustments	11
Machine use	12
Tape replacement	12.3
Cleaning	12.4
Trouble shooting	12.7
Maintenance	13
Lubrication	13.5
Blade replacement	13.9
Belt replacement	13.10
Adjustment of belt tension	13.11
Additional Instructions	14
Enclosures	15
Spare parts	last section

ABBREVIATIONS AND ACRONYMS

LIST OF ABBREVIATIONS, ACRONYMS AND UNUSUAL TERMS TO BE FOUND IN THIS MANUAL

Dwg.	=	drawing
Encl.	=	enclosure
Ex.	=	example
Fig.	=	figure showing spare parts
Max.	=	maximum
Min.	=	minimum
Mod.	=	machine model
N.	=	number
N/A	=	not applicable
OFF	=	machine stopped
ON	=	machine running
OPP	=	oriented polypropylene adhesive tape
Pict.	=	picture
PLC	=	Programmable Logic Control
PP	=	polypropylene
PTFE	=	Polytetrafluorethylene
PVC	=	Polyvinylchloride
Ref.	=	reference mark
SIAT SPA	=	Società Internazionale Applicazioni Tecniche (Società per Azioni)
Tav.	=	Illustration
w	=	width
h	=	height
l	=	length
ol	=	overall length
cbh	=	conveyor bed height

1.2 HOW TO READ AND USE THE INSTRUCTION MANUAL

1.2.1 IMPORTANCE OF THE MANUAL

The manual is an important part of the machine; all information contained herein is intended to enable the equipment to be maintained in perfect condition and operated safely. Ensure that the manual is available to all operators of this equipment and is kept up to date with all subsequent amendments. Should the equipment be sold or disposed of, please ensure that the manual is passed on. Electrical and pneumatic diagrams are included in the manual. Equipment using PLC controls and/or electronic components will include relevant schematics or programmes in the enclosure, and in addition the relevant documentation will be delivered separately.

1.2.2 MANUAL MAINTENANCE

Keep the manual in a clean and dry place near the machine. Do not remove, tear or rewrite parts of the manual for any reason.
Use the manual without damaging it.
In case the manual has been lost or damaged, ask your after sale service for a new copy, quoting the code number of the document.

1.2.3 CONSULTING THE MANUAL

The manual is composed of:
- pages which identify the document and the machine;
- index of the subjects:
- instructions and notes on the machine: sections **2÷14**
- enclosures, drawings and diagrams:
  sections **15÷16**
- spare parts: last section.

All pages and diagrams are numbered. The spare parts lists are identified by the figure identification number.
All the notes on safety measures or possible dangers are identified by the symbol: ⚠

All the important warning notes related to the operation of the machine are identified by the symbol: ☞
The parts typed in **bold** refer to technical data or technical notes on a specific subject.

1.2.4 HOW TO UPDATE THE MANUAL IN CASE OF MODIFICATIONS TO THE MACHINE

Modifications to the machine are subject to manufacturer's internal procedures.
The user receives a complete and up-to-date copy of the manual together with the machine.
Afterwards the user may receive pages or parts of the manual which contain amendments or improvements made after its first publication.
The user must use them update this manual.

2-GENERAL INFORMATION

2.1 SERIAL NUMBER OF THE MACHINE AND NAME OF THE MANUFACTURER

SIAT
M. J. MAILLIS GROUP

SIATs.p.a.Via G.Puecher N°22
Turate (CO) ITALY

CE

Model	Part Number	Year	Ampere	Watt
Type	Serial Number	Volt	Hertz	Phase

2.2 FOR AFTER-SALE SERVICE AND SPARE PARTS PLEASE APPLY TO:

SIAT
M. J. MAILLIS GROUP

Via Puecher, 22
22078 TURATE (CO) - ITALY

Tel. 02-964951
Fax. 02-9682239
E-mail siat@siat.com

AGENT/DISTRIBUTOR OR LOCAL
AFTER SALE SERVICE:

WARRANTY

Within the limits of what is set forth below, Seller agrees to repair or replace without cost to Buyer any defective goods when such defect occurs within a period of twelve (12) months from the date in which Seller's goods have been put into use, but in no event beyond thirteen (13) months from the date of shipment.

Expressly excluded from this warranty are those parts subject to normal wear and tear (by way of illustration, but not limitation, such parts as belts, rubber rollers, gaskets, brushes, etc.) and electrical parts.

Buyer must immediately notify Seller of any defect, specifying the serial number of the machine.

Buyer shall send to Seller the defective item for repair or replacement. Seller will perform the repairs or provide a replacement within a reasonable period of time.

Upon effecting such repair or replacement, Seller shall have fulfilled its warranty obligations. In the event the repairs or replacement must be effected at the place where the machine is installed, all expenses for labor, travel and lodging of Seller's personnel shall be sustained by the Buyer. Buyer will be invoiced in conformity with Seller's standard charges for the services rendered.

Seller is not responsible for defects resulting from:

- Improper use of the machine
- Lack of proper maintenance
- Tampering with the machine or repairs effected by the Buyer.

Seller will not be liable for any injury to persons or things or for the failure of production. With respect to the materials not manufactured by Seller, such as motors and electrical equipment, Seller will grant to Buyer the same warranty Seller receives from its supplier of such materials. Seller does not warrant the compliance of its machines with the laws of non-EEC countries in which the machines may be installed, nor does it warrant compliance with laws or standards relating to the prevention of accidents or pollution.

Adaptation of Seller's machines to the aforesaid laws or standards shall be the responsibility of Buyer who assumes all liability therefore.

Buyer shall indemnify and hold Seller harmless against any claim by third parties resulting from failure to comply with the aforesaid laws and standards.

3-SAFETY

3.1 GENERAL SAFETY INFORMATION

Read all the instructions carefully before starting the work with the machine; please pay particular attention to sections marked by the symbol ⚠

The machine is provided with a complete safety protection and with a two LOCKABLE EMERGENCY STOP BUTTON placed on the same protection and on the control panel; when one button is pressed, it stops the machine at any point in the working cycle.

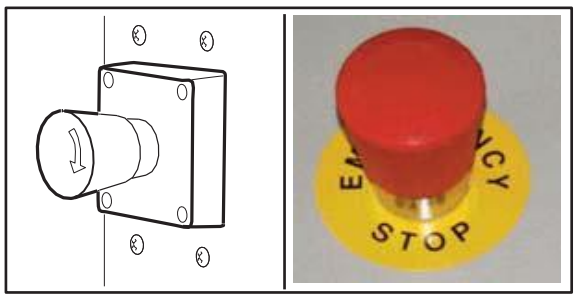

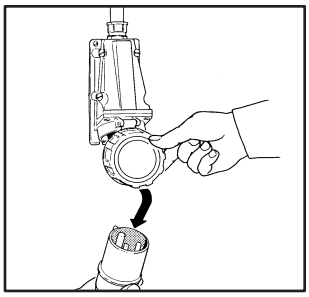

Disconnect the machine from the mains before any maintenance operation.

.

Keep this manual in a handy place near the machine: its information will help you to maintain the machine in good and safe working condition.

3.2 DEFINITION OF THE OPERATORS' QUALIFICATIONS

- Machine operator
- Maintenance technician
- Electrician
- Manufacturer’s technician

Only persons who have the skills described in the following page should be allowed to work on the machine. It is the responsibility of the user to appoint the operators having the appropriate skill level and the appropriate training for each category of job.

SKILL 1

MACHINE OPERATOR
This operator is trained to use the machine with the machine controls, to feed cases into the machine, make adjustments for different case sizes, to change the tape and to start, stop and restart production.
N.B.: the factory manager must ensure that the operator has been properly trained on all the machine functions before starting work.

SKILL 2

MECHANICAL MAINTENANCE TECHNICIAN
This operator is trained to use the machine as the MACHINE OPERATOR and in addition is able to work with the safety protection disconnected, to check and adjust mechanical parts, to carry out maintenance operations and repair the machine.
He is not allowed to work on live electrical components.

SKILL 2a

ELECTRICAL MAINTENANCE TECHNICIAN
This operator is trained to use the machine as the MACHINE OPERATOR and in addition is able to work with the safety protection disconnected, to make adjustments, to carry out maintenance operations and repair the electrical components of the machine.
He is allowed to work on live electrical panels, connector blocks, control equipment etc.

SKILL 3

SPECIALIST FROM THE MANUFACTURER
Skilled operator sent by the manufacturer or its agent to perform complex repairs or modifications, when agreed with the customer.

3.3 INSTRUCTIONS FOR A SAFE USE OF THE MACHINE

Only persons who have the skills described on the following paragraph **3.6** are allowed to work on the machine.
It is responsibility of the user to appoint the operators having the appropriate skill level and the appropriate training for each category of job.

3.4 STATE OF THE MACHINE

List of the modes which are possible with this machine:
- automatic running;
- running with safety protections removed or disabled;
- stopped by using the main switch;
- stopped by using the lockable emergency stop button;
- electric power disconnected;
- compressed air disconnected.

3.5 NUMBER OF THE OPERATORS

The operations described hereinafter have been analized by the manufacturer; the number of operators shown for each operation is suitable to perform it in the best way.
Asmaller or larger number of operators could be unsafe.

3.6 OPERATORS' SKILL LEVELS

The table below shows the minimum operator's skill for each operation with the machine.

OPERATION	MACHINE MODE	OPERATOR'S SKILL	NUMBER OF OPERATORS
Installation and set up of the machine	Running with safety protections disabled.	**2 e 2a**	2
Tape replacement	Stopped by pressing the EMERGENCY STOP button.	**1**	1
Replacement of blades	Electric power disconnected.	**2**	1
Replacement of drive belts	Electric power disconnected.	**2**	1
Ordinary maintenance	Electric power disconnected.	**2**	1
Extraordinary maintenance (mechanical)	Running with safety protections disabled.	**3**	1
Extraordinary maintenance (electrical)	Running with safety protections disabled.	**2a**	1
Extraordinary maintenance (pneumatic)	Stopped by pressing the EMERGENCY STOP button.	**3**	1

3.7 RESIDUAL HAZARDS

The case sealer SM44 HS has been designed following the EC directives, and incorporates various safety protections which should never be removed or disabled.
Notwithstanding the safety precautions conceived by the designers of the machine, it is essential that the operator and service personnel be warned that the following uneliminable residual hazards exis

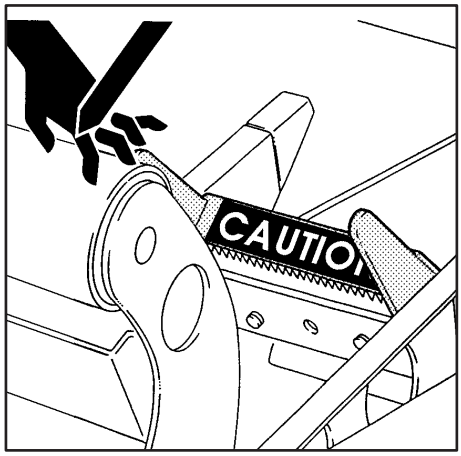

WARNING! Tape cutting blades.
Never remove the safety device which covers the blade on the top and bottom taping units.
Blades are extremely sharp. Any error may cause serious injuries.:

WARNING!: Side flaps fold device guard knobs
Don't remove the orange plastic guard knobs on the side flaps fold device ends.

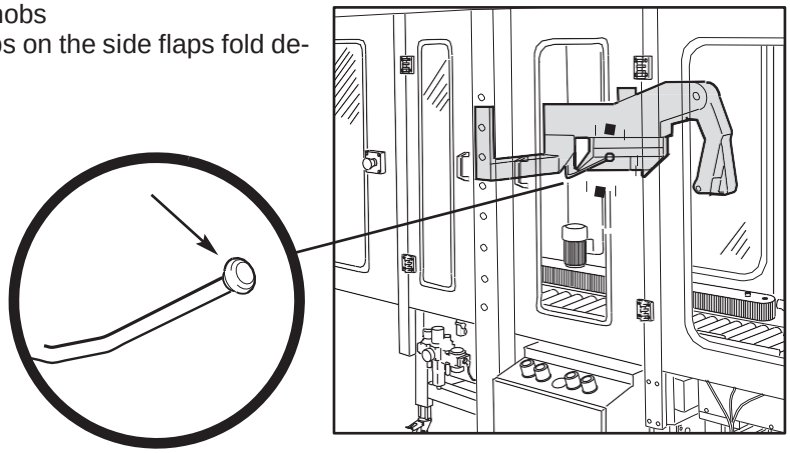

3.8 RECOMMENDATIONS AND MEASURES TO PREVENT OTHER HAZARDS WHICH CANNOT BE ELIMINATED

The operator must stay on the working position shown on paragraph 12.1. He must never touch the running driving belts or put his hands inside any cavity.
The box must be fed by keeping the hands in the right position.
The operator must pay attention to the blades during the tape replacement.

3.9 PERSONAL SAFETY MEASURES

(Safety glasses, safety gloves, safety helmet, safety shoes, air filters, ear muffs).
None is required, except when recommended by the user.

3.10 PREDICTABLE ACTIONS THAT ARE INCORRECT AND NOT ALLOWED

- Never try to stop or hold the box while it is being driven by the belts.
  Use only the EMERGENCY STOP BUTTON.
- Never work without the safety protections.
- Never remove or disable the safety devices.
- Only authorised personnel should be allowed to carry out the adjustments, repairs or maintenance which require operation with reduced safety protections. During such operations, access to the machine must be restricted. When the work is finished, the safety protections must immediately be reactivated.

- The cleaning and maintenance operations must be performed after disconnecting the electric power.
- Clean the machine using only dry cloths or light detergents. Do not use solvents, petrochemicals etc.
- Do not modify the machine or any part of it. The manufacturer will not be responsible for any modifications.
- We advise to apply directly to Siat for modifications.
- Follow carefully the installation instructions of this manual.
  The manufacturer will notbe responsible for damages caused by improper installation.

3.11 TABLE OF WARNINGS, LABELS, PLATES AND DRAWINGS TO BE FOUND ON THE MACHINE

	SYMBOLS	COLOURS
△	DANGER AND PARTS IN MOVEMENT	YELLOW COLOUR
○	COMPULSORY ACTIONS/PROHIBITION	RED COLOUR
□	CONTROLS AND INFORMATION	LIGHT BLUE COLOUR

a ○ Before starting any maintenance operations the electrical power must be disconnected.

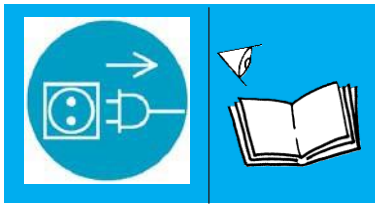

Label code: 3.0.01097.96A

b △ Show the sharp knife on the taping head.

Label code: 3.0.01028.96A

c △ Tape threading path for bottom taping unit and position of the sharp knife.

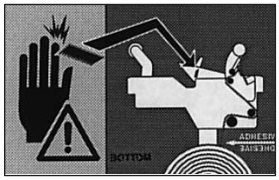

Label code: 3.0.01024.96A

d

Shows the running direction of the belts.

Label code: 3.0.01040.96A

e

Show the earth wire connection point on the machine frame.

Label code: 3.0.01039.96A

f

Caution!: High voltage

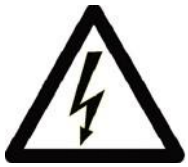

Label code: 3.0.01100.96A

g

Tape threading path for upper taping unit.

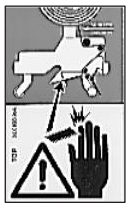

Label code: 3.0.01023.96A

h

Compulsory position to lift the machine with forktrucks or other suitable raising equipment.

Label code: SBC0010337

i

Identification data for the machine model, serial number and manufacturer.

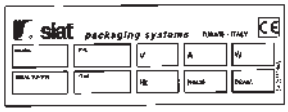

Label code:S340277700A

4 - PRELIMINARY INFORMATION

4.1 GENERAL DESCRIPTION OF THE MACHINE

The SM44 HS case sealer with side drive belts is designed to seal boxes by applying two tape strips on the top and bottom flaps simultaneously. No operator is required.
The machine adjusts itself automatically to the case size and folds the 4 upper flaps. The introduction of the cases into the machine is performed by the indexing system AS24. All the operations are managed by a PLC located in the controls board.

4.2 TECHNICAL SPECIFICATIONS

- Production = 850 boxes/hour (average)
- Standard power supply = see plate
- Installed power: 1,2 kW
- Taping units K11 or K12, tape width 50/75 mm
- Machine+control board+AS24 weight=430+70+90 kg
- Compressed air = 6 BAR; feeding pipe diameter 10 mm
- Belts speed = 30 m/min.
- Infeed conveyor speed: 21 m/min.
- Air consumption: 230 Nl/min

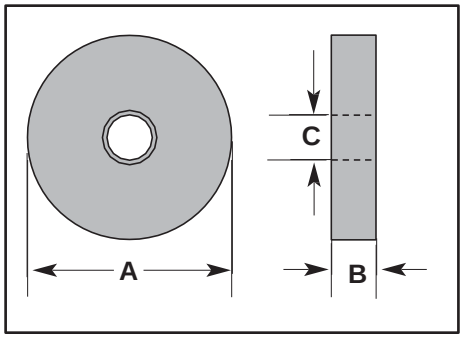

A = 410 mm max
B = 50/75 mm
C = 76 mm

TAPE DIMENSIONS
Suitable adhesive tapes:
PVC
OPP
ADHESIVE PAPER

4.3 PURPOSE OF THE MACHINE

The purpose of this machine is the sealing with adhesive tape of boxes having the dimensions (in millimeters) shown in the table below:

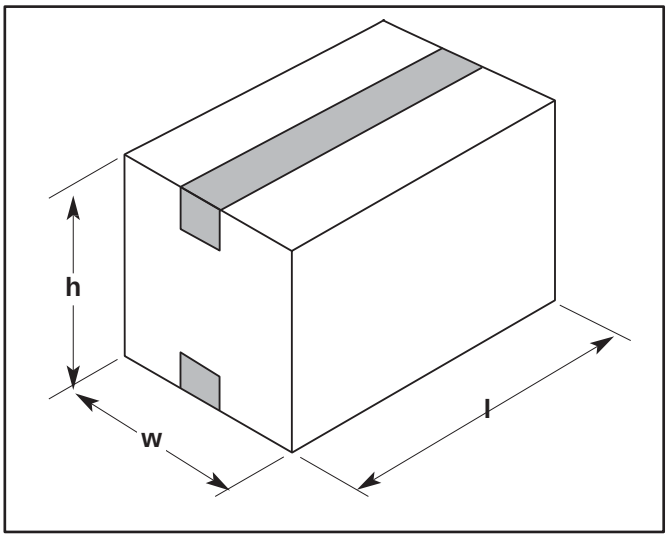

BOXES DIMENSIONS

SM44 HS	w	h	l
min.	160	140	200
max.	500	500	600

CASE WEIGHTS
min.: 2 kg
max.: 30 kg

Warning: The machine supplied with the standard electric system is not designed for use in atmosphere with risk of deflagration. In such conditions the machine must be equipped with anti-deflagration components and/or air motors.

4.4 MAIN COMPONENTS

The machine is composed of:

n. 1 frame
n. 4 adjustable legs
n. 2 columns
n. 2 taping units
n. 1 top head
n. 2 side drive belts
n. 2 electric motors
n. 1 safety guard
n. 2 emergency stop button
n. 1 controls board

The infeed conveyor is composed of:

n. 1 frame
n. 4 adjustable legs
n. 1 electric motor
n. 1 motorized belt

For the technical features of the electric parts refer to section **15-ENCLOSURES**

4.5 OPERATIVE FLOW

The boxes, coming from the filling stations, are centred, gated and fed to the machine by the indexing unit AS24.
The same indexing unit is equipped with a reading head for the identification of the format of the introduced box and the position of the following upper forming group correctly by appropriate electro-pneumatic interface devices.
The driving belts transport the box during the different phases, from flaps folding to the following sealing, to the exit of the same box.

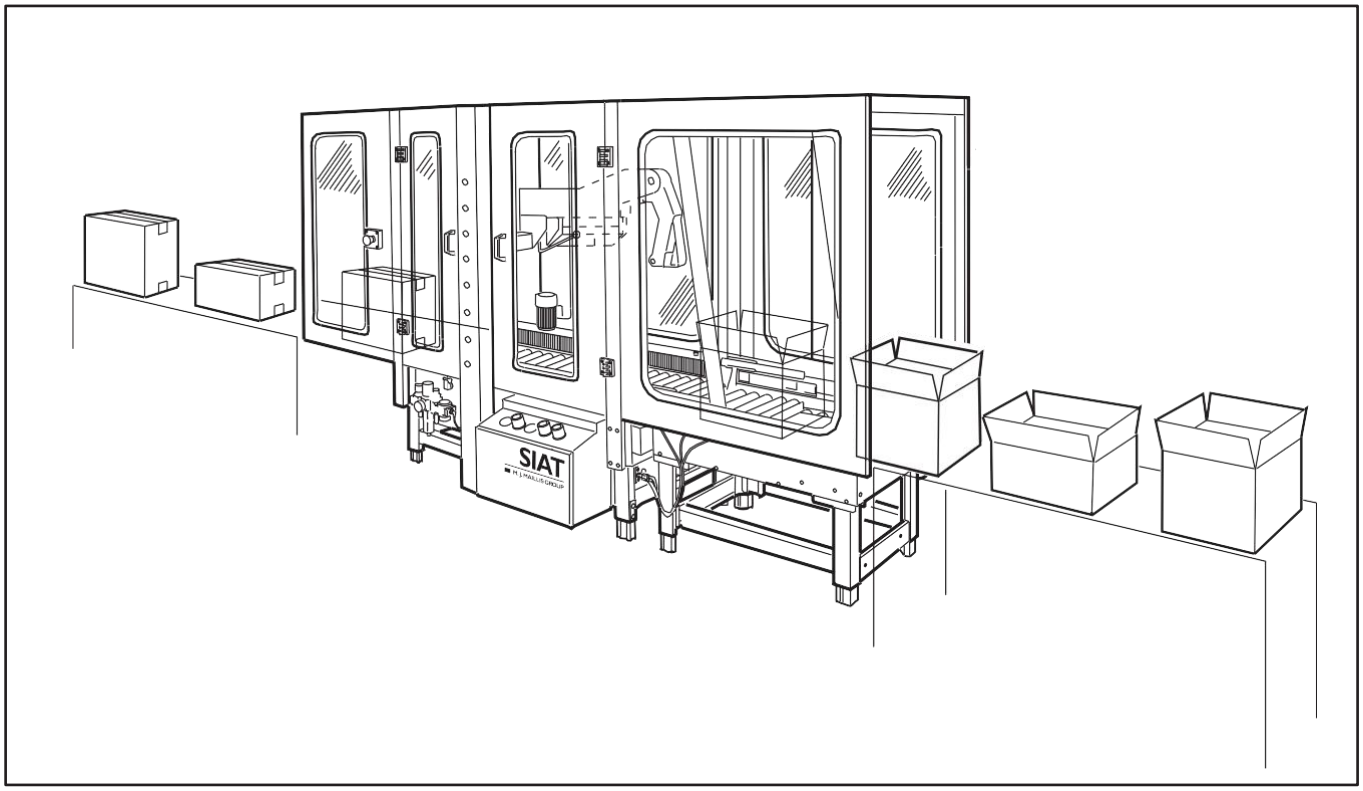

4.6 MACHINE NOISE MEASUREMENT

Acoustic pressure at 1 meter distance from the machine with the tape roll inserted: 73 dB. Acoustic pressure at a height of 1,6 meter above the machine with the tape roll inserted: 73 dB.
The measurement has been performed by a SPYRI-MICROPHON phonometer..

4.7 OVERALL DIMENSIONS

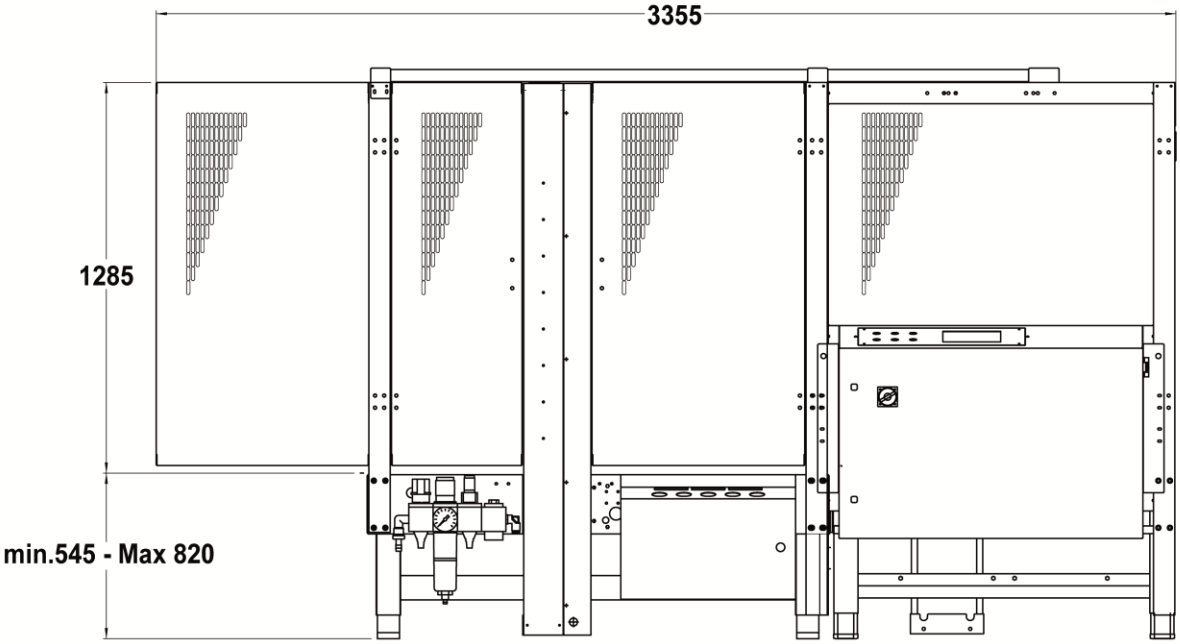

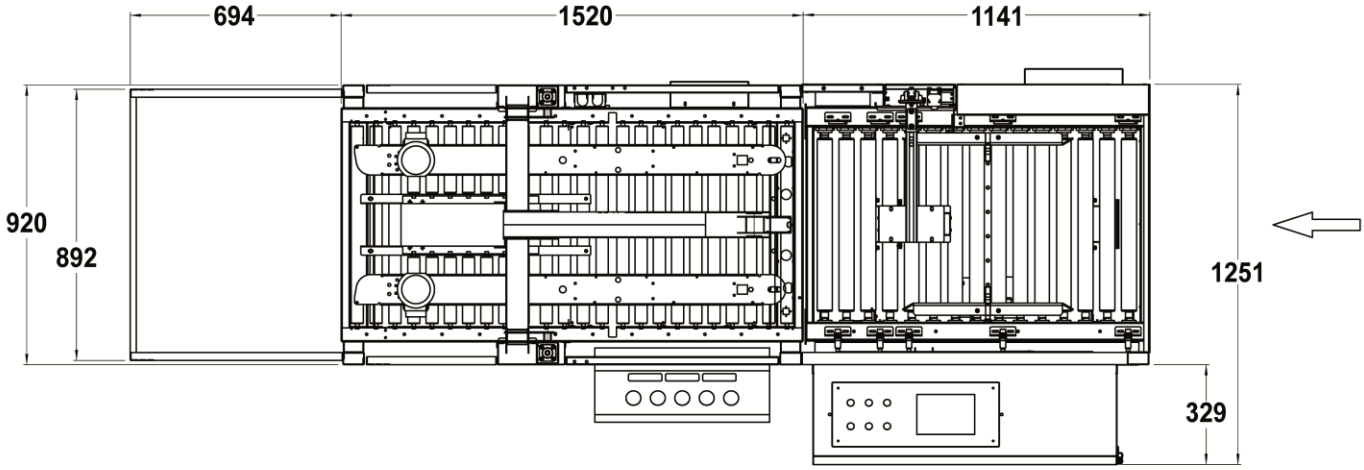

5-SHIPMENT - HANDLING - STORAGE

5.1 MACHINE TRANSPORTATION AND HANDLING

The machine and the infeed conveyor are shipped in 2 separate packings, fixed on a wooden pallet. They can be lifted with a normal fork lift. The standard packing is suitable for surface and air transportation. Oversea packing on request.

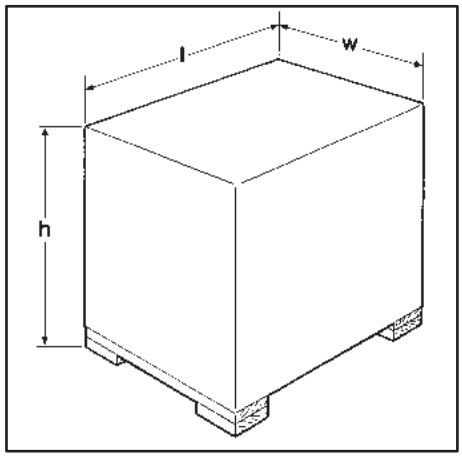

Packing dimensions

SM44HS	AS24
l= length: 2880 mm	**l**: length: 1170 mm
w= width: 1480 mm	**w**= width: 980 mm
h= height: 2050 mm	**h**= height: 980 mm
Weight: 617 kg	Weight: 134 kg

5.2 PACKING FOR OVERSEAS SHIPMENT (OPTIONAL)

The machines shipped by sea freight are covered by an aluminium/polyester (Vacupol) bag which contains dhydrating salts.

Machine packing

-machine **1**
-guards **3**
-accessories **4**.

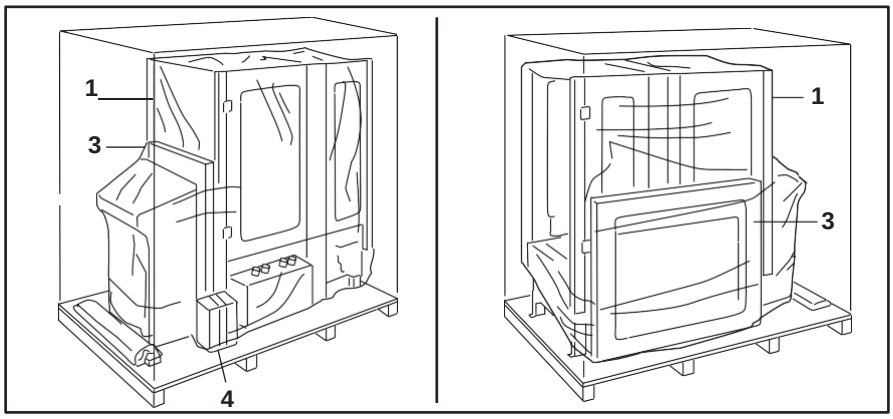

Indexing unit packaging.

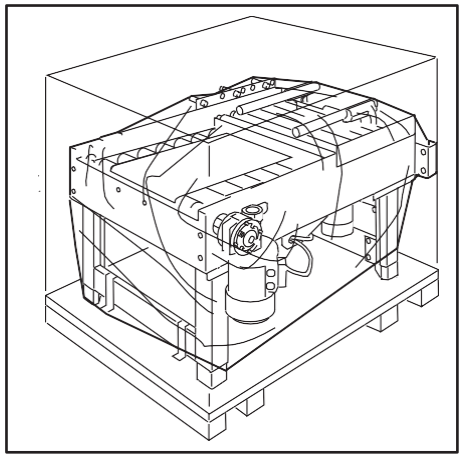

5.3 STORAGE OF THE PACKED OR UNPACKED MACHINE

In case the machine must stay inactive for a long period, please take the following precautions:

- store the machine in a dry and clean place;
- if the machine is unpacked it is necessary to protect it from the dust;
- do not stack anything on top of the machine;

6-UNPACKING

6.1 Cut the polypropylene straps.
Use a cutter to remove the part of the carton fixed by the staples along the entire perimeter of the packing. (Otherwise remove the staples by using a suitable tool)

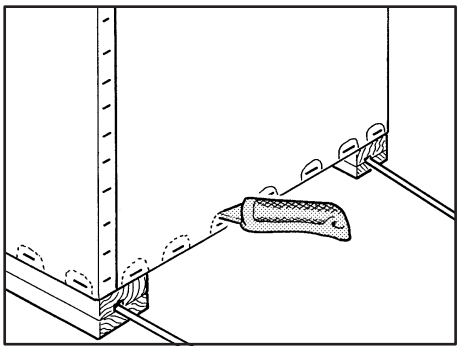

After having cut the carton or removed the staples, lift the packing up in order to free the machine. (2 persons)

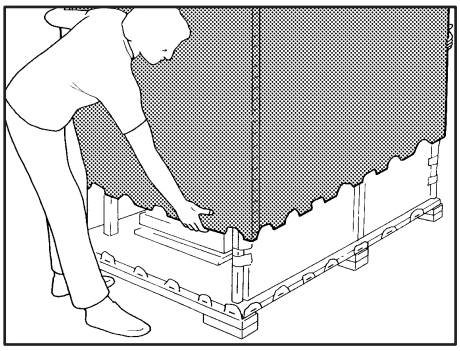

Move the machine and the infeed conveyor to where they will be located.

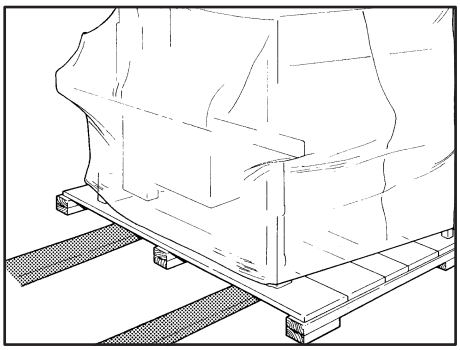

Cut the stretch film and remove the guard panels and the accessories box.

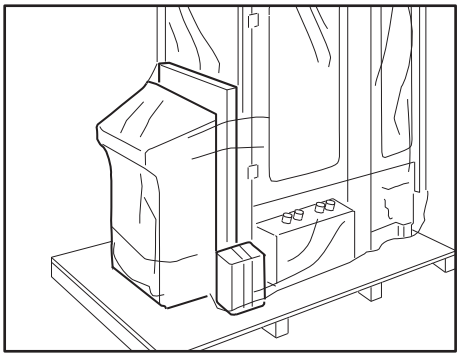

Sealing machine brackets removal
Caution: the operations must be accomplished on all the four legs one at a time.

Remove the screws **1**;
Unscrew the nut **2** and remove the bracket;.
Replace and tighten the screws **1**;
Acting in similar way on the other legs, in sequence.

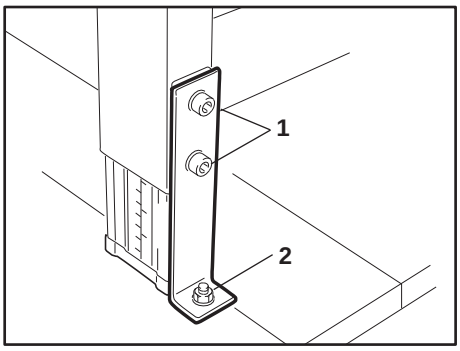

To lift the machine up, position the lift forks where there are the labels on right hand side or front-back sides and remove the pallet.

Machine weight + control board: 430 + 70 kg.

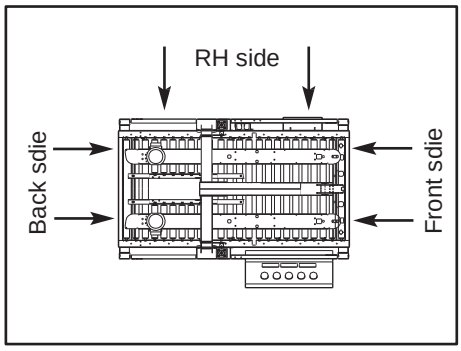

Conveyor brackets removal

Loosen the nuts **1** and remove the brackets.

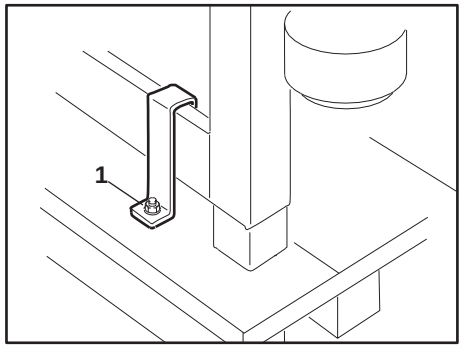

To lift the conveyor, position the lift forks where there are the labels on front or back side and remove the pallet.

Conveyor weight: 90 kg

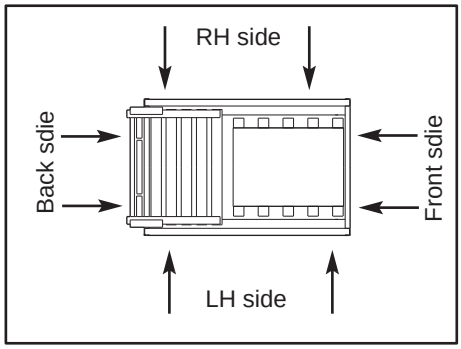

6.4 PACKING DISPOSAL

The packing of the machine Mod. SM44 HS is composed of:

- wooden pallet
- carton box
- wooden supports
- steel fixing brackets
- polythene foam protection
- plastic straps (PP)
- clay dehydrating pouches
- aluminum/polyester/polythene bag

(only for seafreight shipments)

For the disposal of these materials please follow the provisions of the law in your country.

7-INSTALLATION

7.0. SAFETY MEASURES
Read carefully chapter 3.

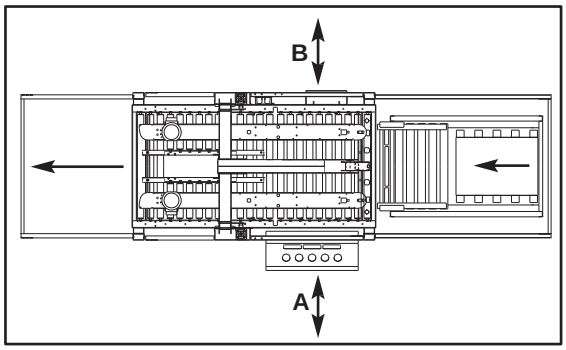

7.1. ENVIRONMENTAL CONDITIONS REQUIRED
-Temperature min. = 5 °C; max. 40 °C
-Umidity min 30%; max. 80%
-Dust free environment

7.2. SPACE REQUIRED FOR MACHINEOPERATION AND MAINTENANCE
Min. distance from the wall: **A** = **1500** mm; **B** = **1000** mm;
Min. height:= **2500** mm

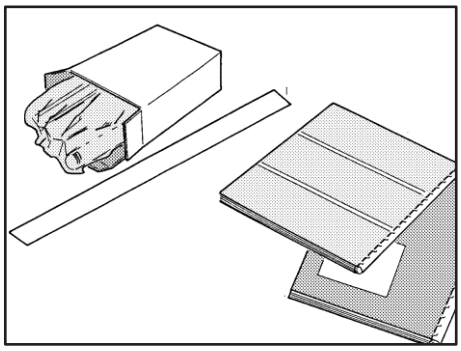

7.3 SPARE PARTS AND THREADING TOOL FOR TAPING HEADS

For a detailed description of the tools kit see section 13.1.

7.4 MACHINE POSITIONING
Raise the machine with a fork lift positioning the lift forks under the points where there are the labels.

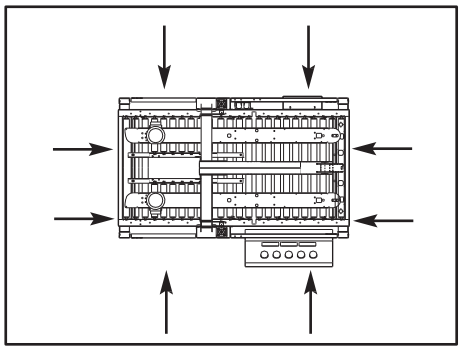

7.4.1 WORK HEIGHT ADJUSTMENT
Lift the machine as shown in picture.
Unlock the screws and take the legs out looking for the desired conveyor bed height on the graduated label.

Then lock the screws again.

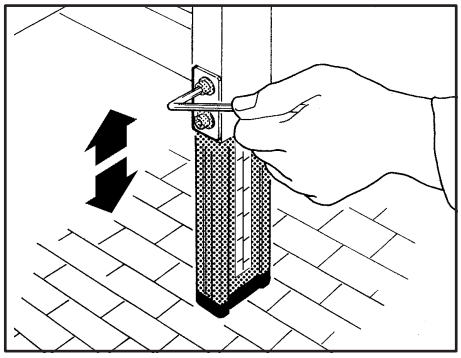

7.5 SAFETY GUARDS: INSIDE AND OUTSIDE MACHINE EMERGENCY STOP PUSH-BUTTON

Position and assemble the inside (**A**) and outside (**B**) guard panels with the upper and bottom brackets and stiffening frofile plates as shown in the pictures.

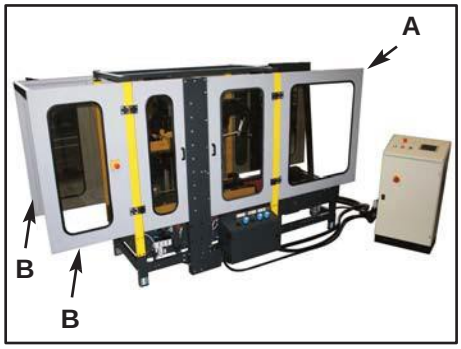

7.5.1. INSIDE SAFETY GUARDS

Support brackets (upper and bottom); 2+2 socket head screws each bracket.

7.6 CONNECTION BETWEEN THE INDEXING UNIT AS24 AND THE MACHINE SM44 HS

Lift the indexing unit by placing the forks under the points where the labels are.

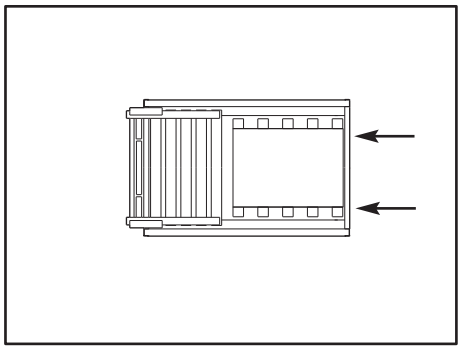

7.6.1 Move the indexing unit to the machine and fix it using the screws previously removed.

7.6.2 Unlock the screws of the legs, move the legs down to the floor and lock the screws.

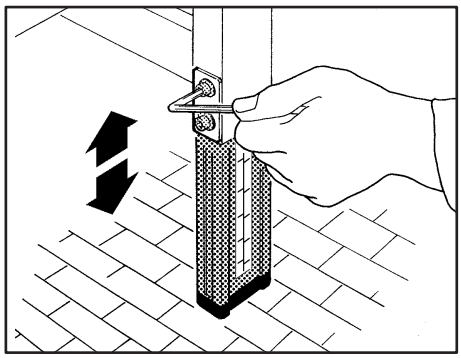

7.7 EMERGENCY STOP BUTTON

Furthermore mount the complete bracket with emergency stop but-ton.

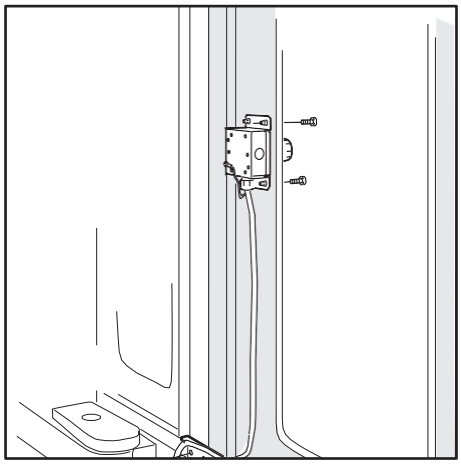

7.8 PNEUMATIC CONNECTION

Connect air pipes from the sealing machine to the conveyor centring guides cylinder connectors and to infeed conveyor cylinders.

Fitting acronyms shown in the picture identify the pipes number coming from the machine.

5A – 5B – 7B – 11A – 11B

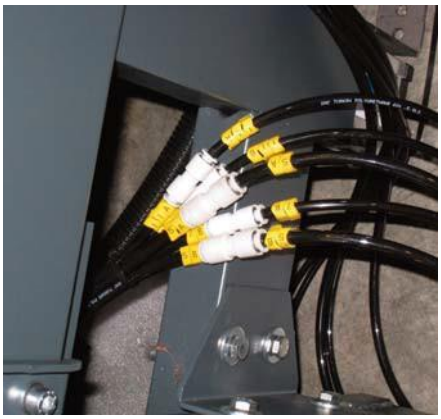

7.9 MAIN PNEUMATIC CONNECTION

Connect an air pipe to the ON-OFF valve and fix it with a strap.
Min. inside diameter of the pipe 10mm.
Air pressure 6÷7 BAR

Give air to the machine by the ON-OFF valve.

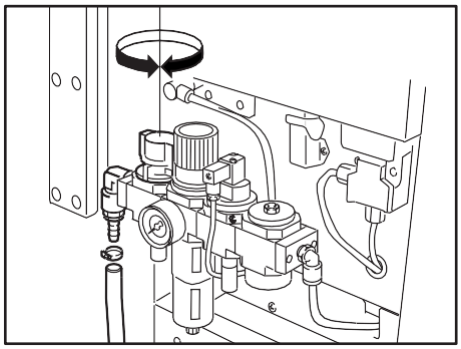

7.11 Carton sealer front box

Box **CA1**
Cables n.**3** and **6**

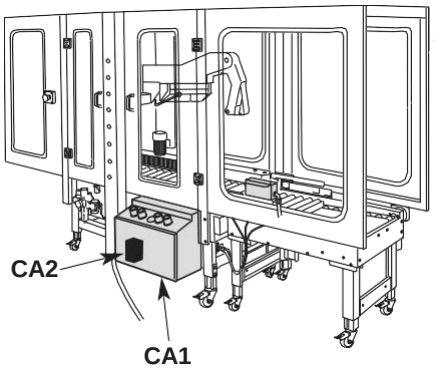

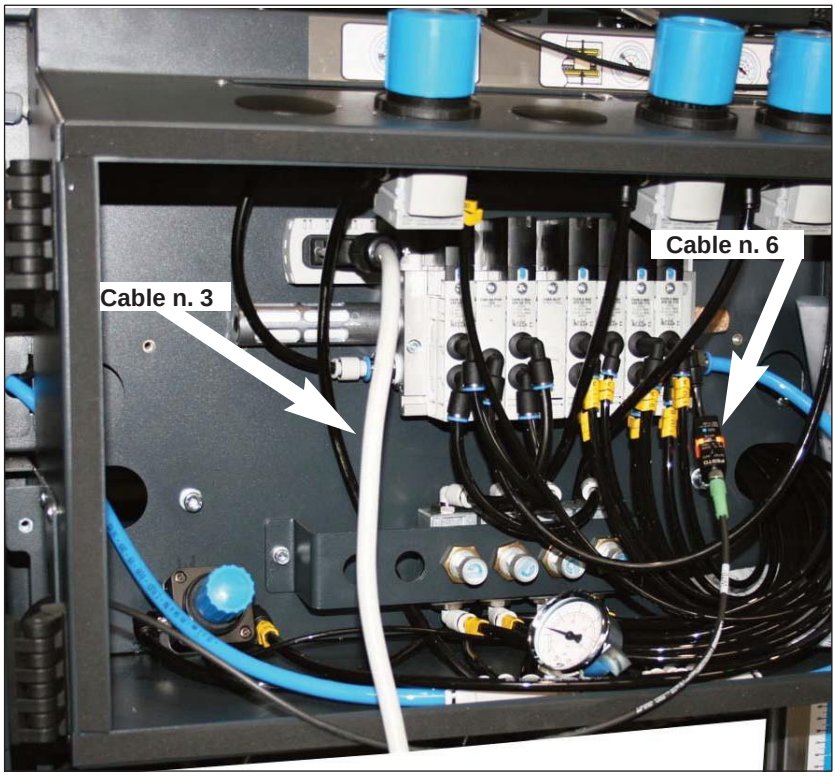

Carton sealer front box

Box **CA2**
Cable n. **6**

Connectors:
W70(SP1) Pressostat

W73 Cylinder sensors
W74

W77 Motor
W78

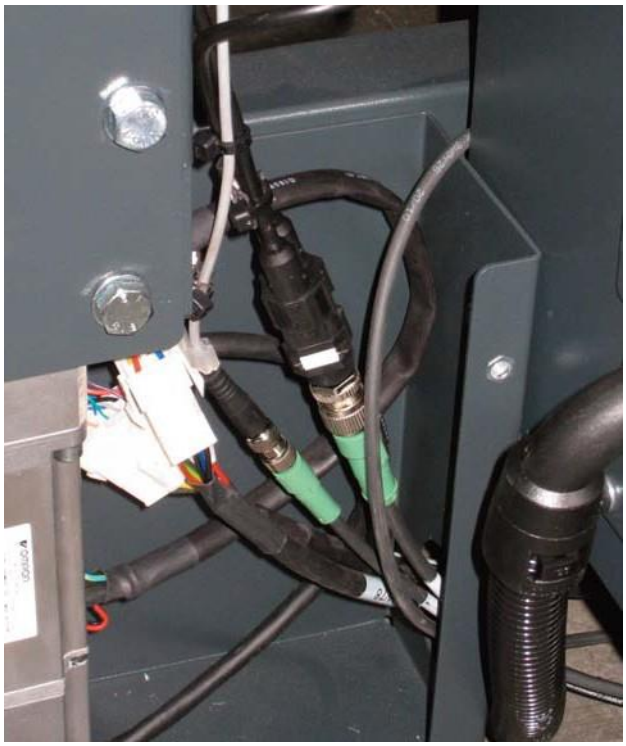

7.12 Carton sealer rear box
Cable n. **5**

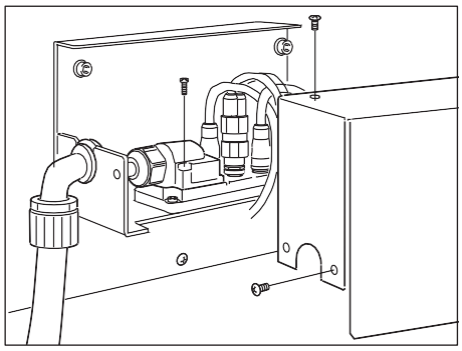

Indexing unit box and vertical axes motors

Cable n.**4**

Connectors:
W72 – SQ32 Cylinder sensor
W71 – SQ30/SQ31 Cylinder
W8 – Y Cylinder
W76-76 motor + ground wire on the fixing screw

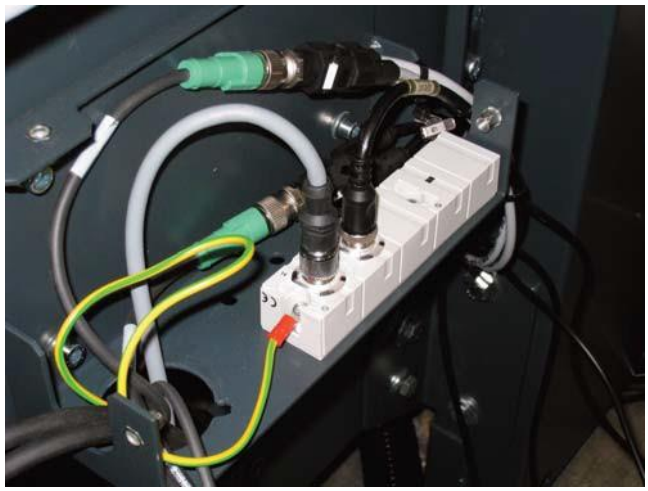

Connection of indexing unit photocells B10, B1, B2.

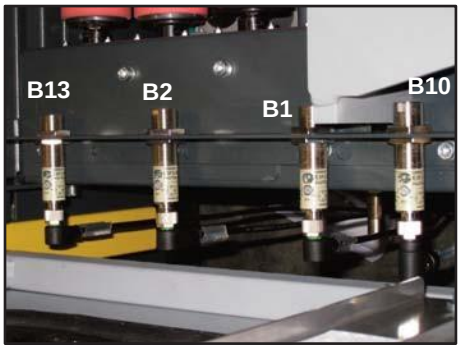

Connect the photocells B10, B1 connector to the plug.

Connect the cables with connector coming from the machine to the photocells B2-B13.

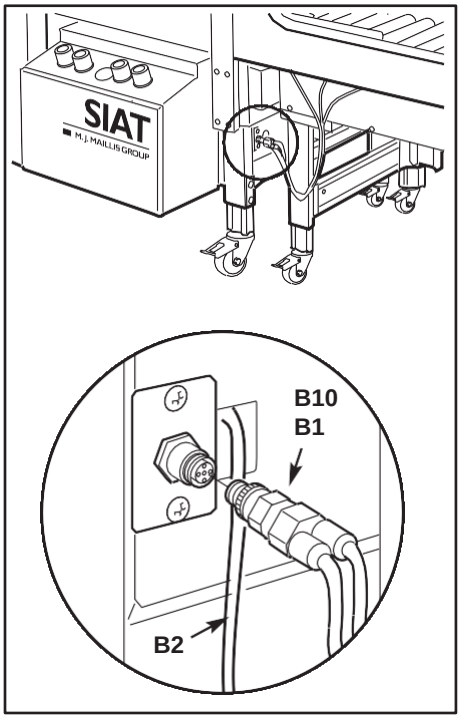

7.13 PRELIMINARY ELECTRIC CHECK-OUT

Before connecting the machine to the mains please carry out the following operations:

7.13.1 Make sure that the socket is provided with a ground protection circuit and that both the mains voltage and frequency meet the indications on the name plate of the machine.

7.13.2 Check that the connection of the machine to the mains meets the provisions of law and/or the safety regulations in your country.

7.14 MACHINE CONNECTION TO THE MAINS AND CHECK-OUT

Installed power = 0,620 kW

-Connect the power cable (**A**) of the control board to an electric socket.

-Standard power supply 400Volt 50 Hz 3Ph.

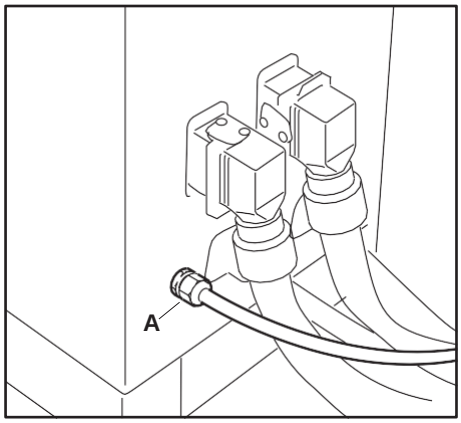

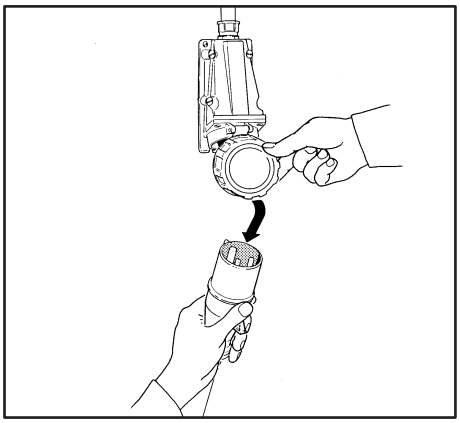

8-CONTROLS

8.1 CONTROL BOARD

1. Main switch
2. Voltage warning light
3. Auxiliaries push button
4. Stop button
5. Start button
6. Touch screen control panel
7. Warning (flashing light + buzzer)
8. Emergency stop button

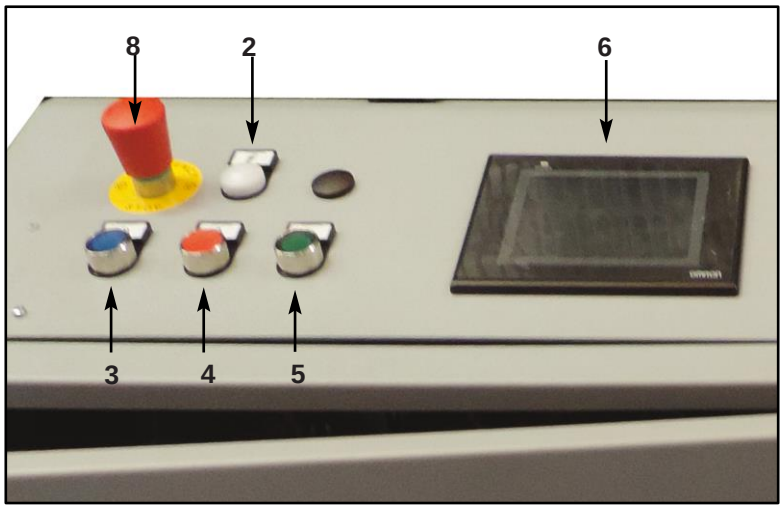

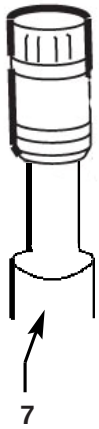

8.2 REAR BOX

1 Centering guide pressure regulator
2. Side belts (motorizations) pressure regulator
3. Box height pick-up pressure regulator

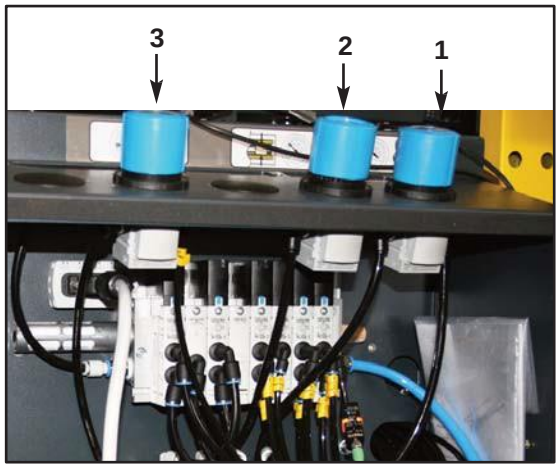

WARNING!
In the box there's a pressure regulator of the compensation cylinder on the machine vertical axis (dancer).
The regulator is adjusted by the manufacturer during machine assembly and testing (2,5 BAR); the settled value should never be changed.

9-OPERATION

9.1 Turn on the air to the machine by the ON/OFF valve; set the main switch in ON position; close the safety guards; release the EMERGENCY STOP button; press Auxiliaries button and Start Button (if there are no alarm signalling).

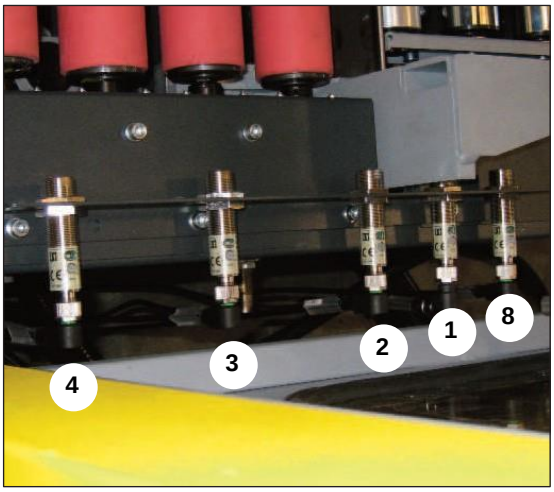

9.2 Start button activation: motors start (machine and indexing unit) and lifting of the indexing unit drive belt.
Obscuring photocell n. 1: lowering of indexing unit drive belt and stop of the corresponding motorization.
Obscuring photocell n. 2: Descent of the reading head and contemporary closing of the indexing unit levers that line the box up as necessary; in this phase the “box measurement” is executed.
Once the measurement is finished the forming-sealing group is positioned at the corresponding height of the reading + 20 mm, on a floating position, to allow a proper box closing in any condition.
After the forming-sealing group positioning a lifting of the indexing unit plan follows and the re-start of the corresponding motorization; the machine works on the box.
Obscuring photocell n. 2: activation of electronic control logic (cycle start – machine occupied).
Free photocell n. 1: lowering of indexing unit drive belt: with new photocell obscuring the following box will cause the stop of the corresponding motorization.
Obscuring photocell n. 3: rear flap folder check.
Obscuring photocell n. 4: motorizations closing.
Free photocell n. 5: start of closing operation of the box rear flap by the corresponding arm with flap folder device; furthermore, during the transport, the side flap folders compete the box closing operation.
Obscuring photocell n. 6: rear flap folder check.

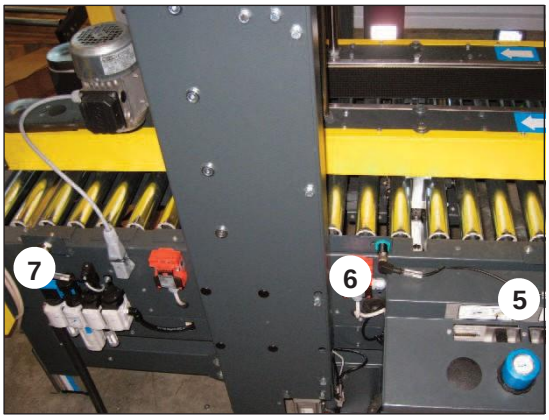

Note: during the transit in “area 2” (between photocells n. 4 and n. 5), if the standing box on the indexing unit has got the same dimensions of the previous one, it’s introduced into the machine immediately.

Free photocell n. 7: cycle conclusion.

Energy saving 8 photocell: motors stop if the photocell is not engaged after a certain amount of time.

9.3. OPERATION MODES DESCRIPTION

The carton sealer works only in automatic: closed safety protection, free emergency stop button, enabled control panel and start button activated, open compressed air circuit.

MACHINE START:

- Press auxiliaries button (3); verify the lighting of the incorporated pilot lamp.

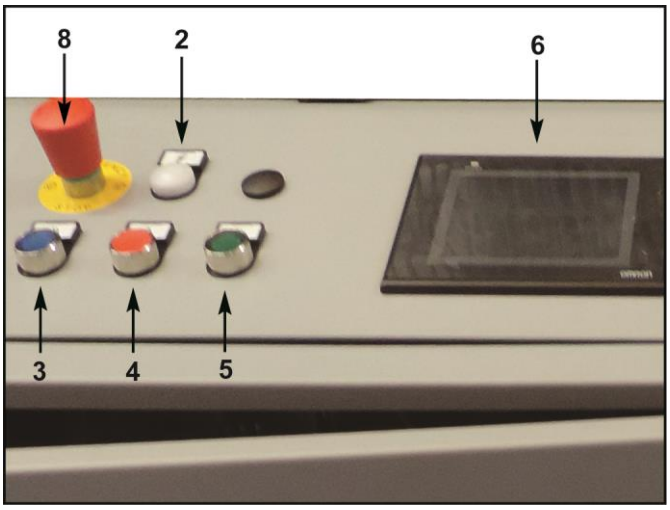

- Wait for the lighting of the control panel (6); this is a touch screen panel, so to activate a function or to move amoungst the pages it's enough to touch the screen with a finger on the corresponding text or pictures.

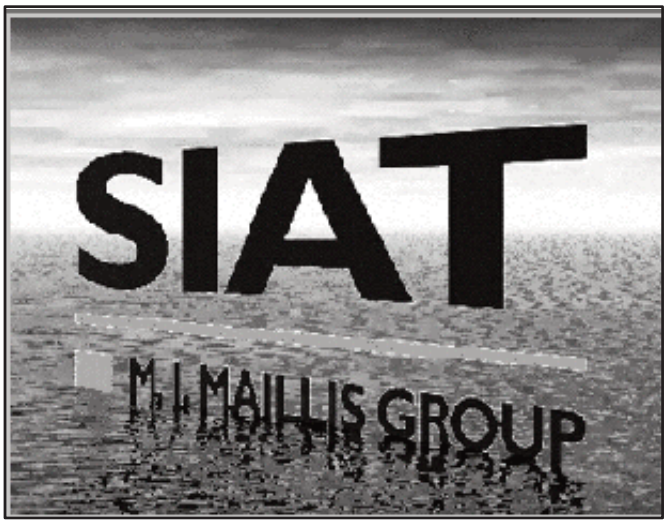

- Touch any point on the screen to enter the main page

- In case of alarm signalling in progress, touch the corresponding symbol with a finger to enter the alarms page.

- Reset as necessary after intervention for the elimination of the problem that caused the alarm signalling.

- Press B

A: Main page
B: Alarm reset
C: Reset acoustic signalling
D: Alarms log

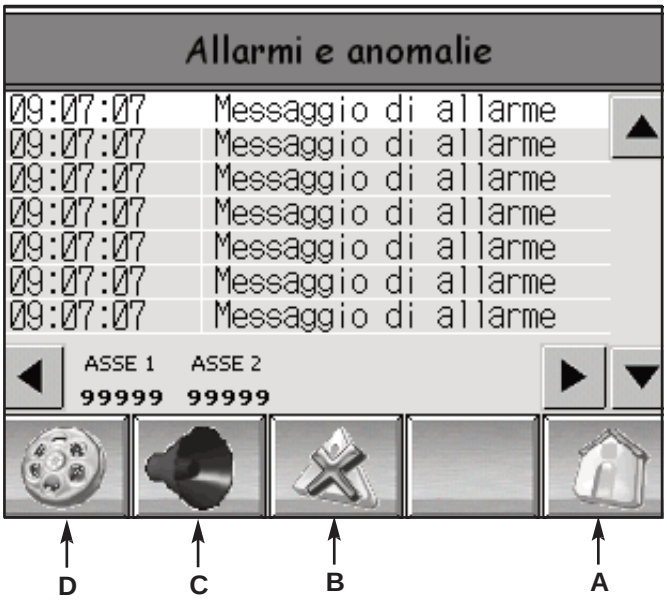

Return to main menu mode (A).

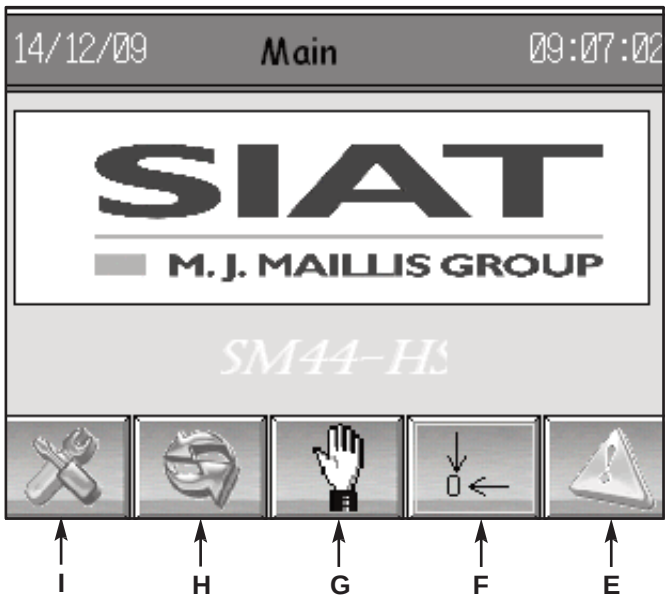

E: Alarms page
F: Machine general reset
G: Page mode of manual machine axes drive
H: Page operation automatic cycle
I: Page of system settings and diagnostics

- Press F (reset)

- Press Start button (5), obtaining in this way the rollers and the indexing unit belt start, the motorizations start and the visualization of the operation automatic cycle page (H) on the control board (6).

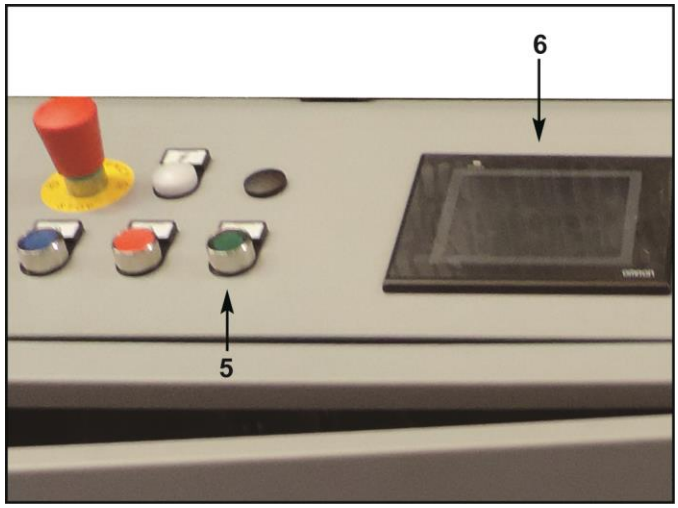

- Mode of page of operation automatic cycle

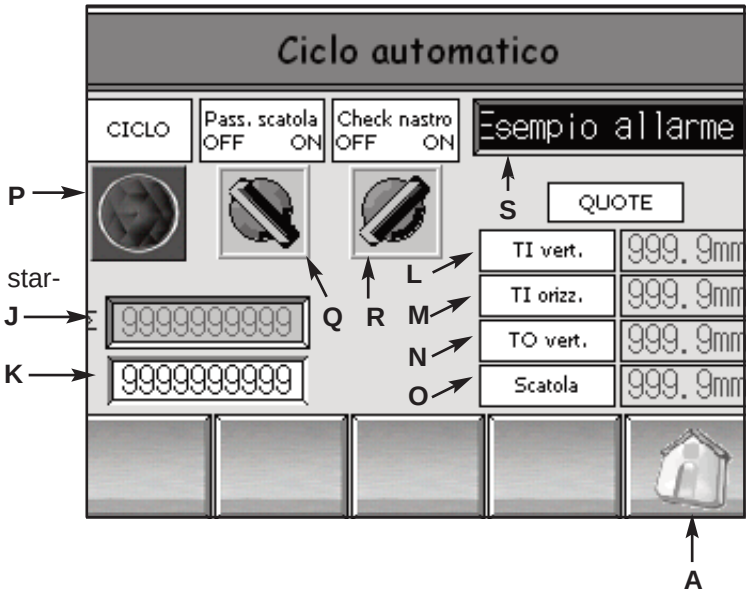

- In this condition the machine results ready for the starting of the sealing cycle as foreseen.

J- Box counter (total non resettable)
K: Box counter (partial resettable)
L: Indexing unit vertical axe (only visualization)
M: Indexing unit horizontal axe (only visualization)
N: Machine vertical axe (only visualization)
O: Box height (only visualization)
P: Sealing cycle on/off (lighting signalling)
Q: Box upper sealing on/off or “transit” without sealing removing also the top taping unit
R: Alarms signalling tape end/breakage on/off
S: Only visualization: tape end and full line

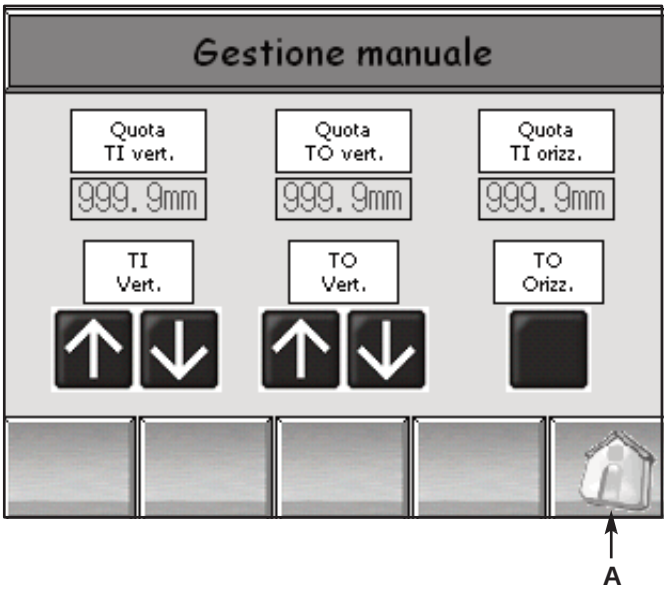

- Page mode of manual machine axes drive (G)

- Page of system settings and diagnostics (I)

Warning: Values are protected by passwords, in order to avoid unauthorized changes that could to compromise the regular machine operation.

Only the machine administrator or authorized personnel of after sales service can enter the pages of machine management data.

PARAMETERS	DESCRIPTION	UNIT OF MEASURE
Origin research speed vertical axis	AXIS HOME SEARCH SPEED (FIRST PHASE)	mm/’
Origin offset moving speed vert. axis	SENSOR HOME SEARCH OFFSET SPEED (SECOND PHASE)	mm/’
Manual speed	MANUAL AXIS SPEED	mm/’
Vertical position range	SAME BOX ACCEPTANCE VALUE (VERTICAL)	mm
Horizontal position range	SAME BOX ACCEPTANCE VALUE (HORIZONTAL)	mm
Positioning offset to axis	TAPING HEAD OFFSET (DIFFERENCE BETWEEN READ AND POSITIONING VALUES)	mm
Timeout full line	FULL LINE START DELAY FROM PHOTOCELL COVERAGE	Sec
Initial speed on box research	AXIS 1 FIRST PHASE SPEED (BOX SEARCH)	mm/’
Low speed on box research	AXIS 1 SECOND PHASE SPEED (PROBE SLOWING)	mm/’
Go up TI vert. speed	AXIS 1 RETURN TO HOME SPEED (AFTER MEASURING)	mm/’
Max value at height speed	SPEED CHANGE HEIGHT (MAX -> MIN)	mm
Min value of box research	MIN BOX HEIGHT (ALARM TRIGGERED WITHOUT BOX)	mm
Speed TO SM44 positioning	AXIS 2 POSITIONING SPEED (TAPING HEAD)	mm/’
Go up TO vert speed	AXIS 2 RETURN TO HOME SPEED	mm/’
Taper alarm exclusion	END AND BROKEN TAPE ALARM BIT EXCLUSION	0-1
Reference box height	REFERENCE BOX HEIGHT FOR AXIS 1 CALIBRATION	mm
Max height TI AS24	MAXIMUM AXIS 1 HEIGHT (CALIBRATED HEIGHT)	mm
Max height TO SM44	AXIS 2 CALIBRATION HEIGHT (TAPING HEAD)	mm
Min weight TI AS24	MINIMUM AXIS 3 WIDTH (HORIZONTAL READER)	mm
Max weight TO SM44	MAXIMUM AXIS 3 WIDTH (HORIZONTAL READER)	mm

9.4 ALARM SIGNALIZATIONS

-000 Emergency
-001 Air pressure
-002 Min. guides closing
-003 Thermal Overload QM1
-004 Thermal Overload QM2
-005 Thermal Overload QM3
-006 Thermal Overload QM4
-009 Origin TI vert. missing
-010 Origin TO vert. missing
-011 TI horizontal not ready
-012 Origin TI horiz. missing
-013 vert. Calibration not executed
-014 TI SQ08 not detected
-016 Lower tape breakage
-017 Upper tape breakage
-018 Cycle max. time
-019 Alarm axis TI
-020 Alarm axis TO
-048 Lower tape end
-049 Upper tape end
-050 Full line

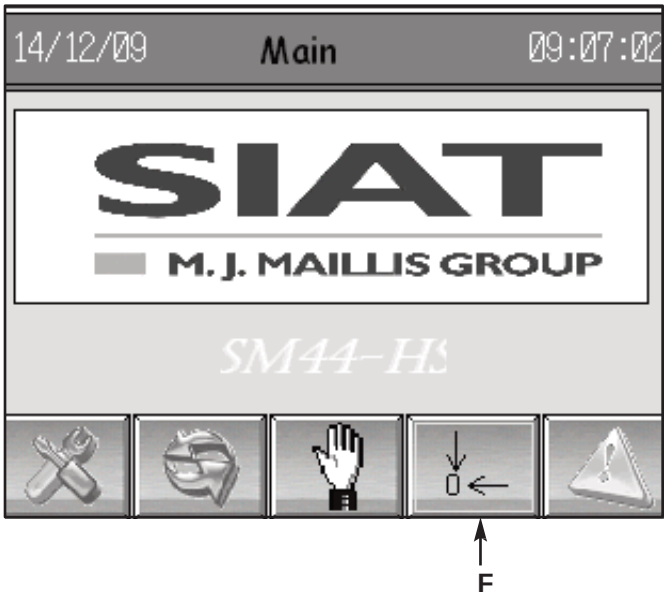

- Reset (B) as necessary after intervention for the elimination of the problem that caused the alarm signalling.

Note: in case of alarm signalling in positions 009, 010, 011, 012, 013, 014, 019 and 020, if the reset doesn't succeed, it can be necessary to execute a machine general reset (F).

If the alarm persists, please contact the manifacturer's after sales service.

10-SAFETY DEVICES OF THE MACHINE

10.1 SAFETY GUARD

It limts the access to the machine, protecting the operator from the moving parts.

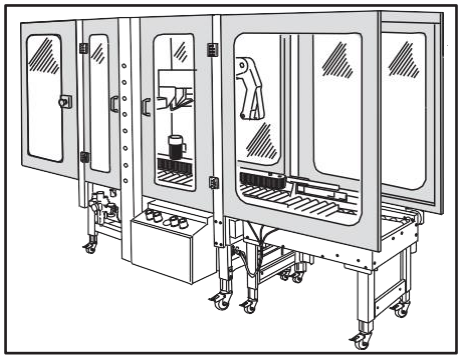

10.2 BLADE GUARDS

Both the top and bottom taping units have a blade guard.

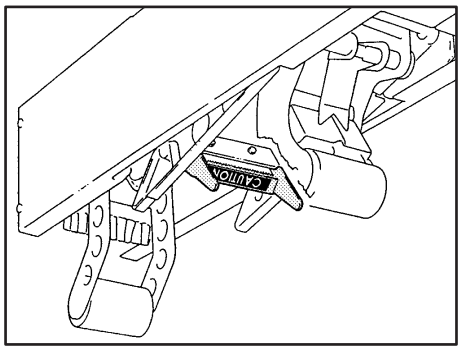

10.3 BELT GUARDS

The drive belts are protected by safety covers on their external sides and by rigid elements on the exit side. These protections must be immediately replaced if damaged.

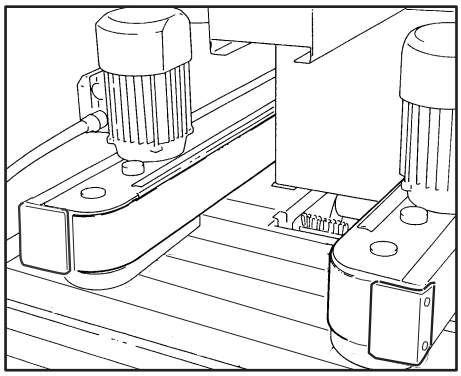

10.4 EMERGENCY STOP BUTTONS

The lockable emergency stop buttons are placed in handy position, on control board and on the safty guards.

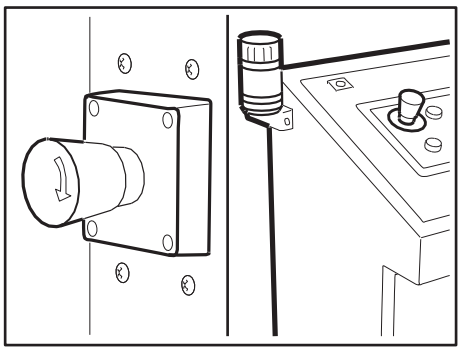

10.5 ELECTRIC SYSTEM

The electric system is protected by a ground wire whose continuity has been tested during the final inspection. The system is also subject to insulation and dielectric strength tests.

11.0 SECURITY

ll the operations to prepare and adjust the machine must be made with the E-stop locked.

11.1. TAPE LOADING ON THE TOP UNIT

Insert a tape roll on the drum and push it fully forward.

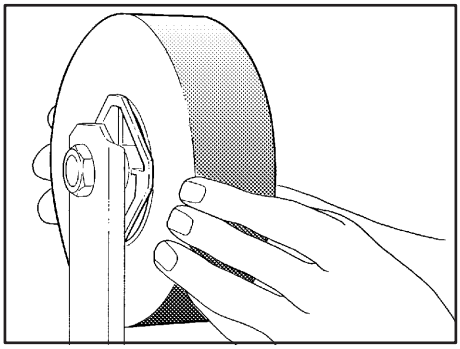

Attach the tape leg to the threading tool (supplied with the tools kit).

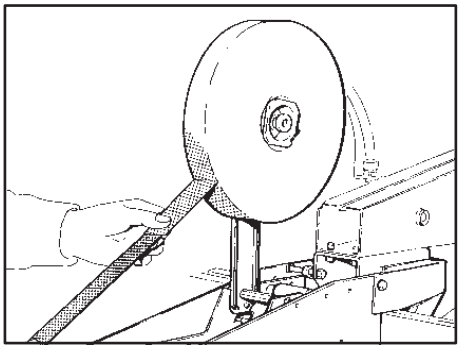

Insert the plastic threading leader through the taping unit. Take care to keep hands away from the tape cutting blades. (see section 3.11-b)

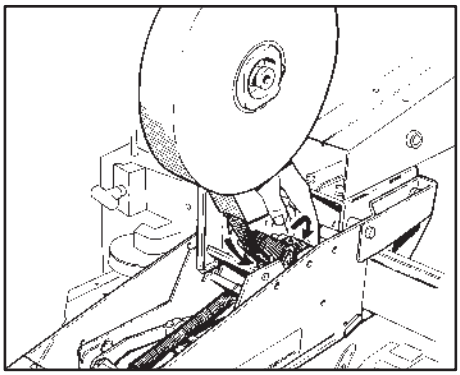

Follow the path through the unit as shown on picture and make sure that the adhesive side is placed on the correct side.

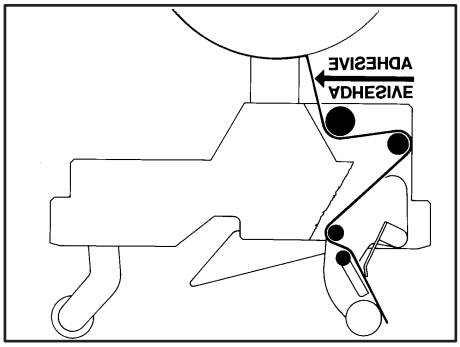

Pull and cut off the excess tape using a pair of scissors as shown.

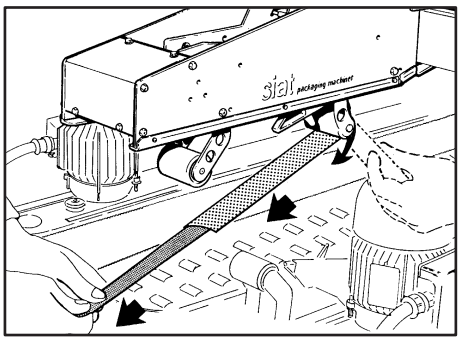

11.2 TAPE LOADING ON THE BOTTOM UNIT

Remove the bottom taping unit from its housing and put it on a working bench;

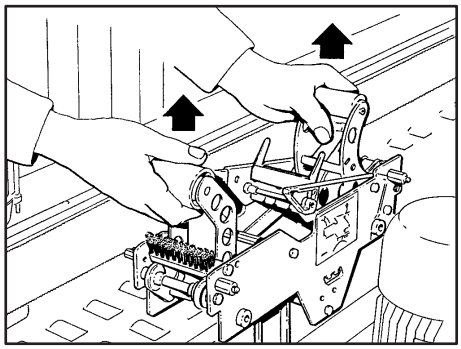

-Put a tape roll on the drum and thread the tape through the unit as shown on the label in the same manner as for the top unit;

-Put the bottom unit back into its housing.

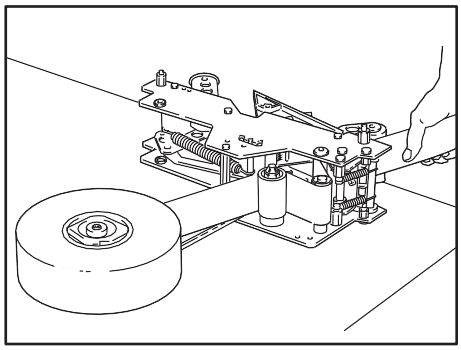

11.3 TAPE DRUM ALIGNMENT

Check the centering of the tape on the rollers of the taping unit.
If necessary unscrew the nut **1** and adjust the screw **2**.

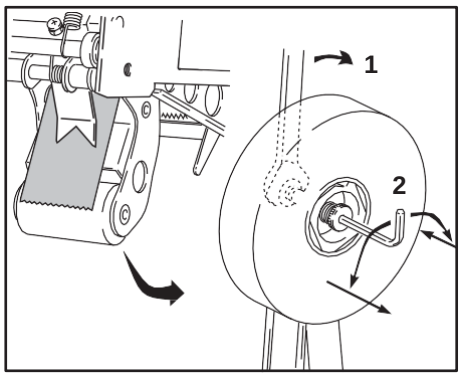

11.4 TAPE DRUM FRICTION BRAKE ADJUSTMENT

Check the tape tension:
- with PVC the tape drum must be free
- with OPP the tape drum must be slightly frictioned

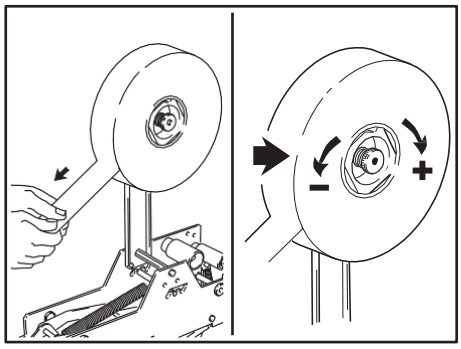

11.5 ADJUSTMENT OF TAPING UNITS ACCORDING TO THE TYPE OF BOXES

Adjust the main spring:
- decrease the spring load for light boxes;
- increase the spring load for heavy boxes.

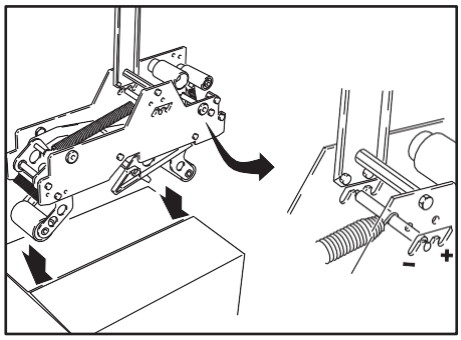

11.6 MAIN PRESSURE REGULATOR

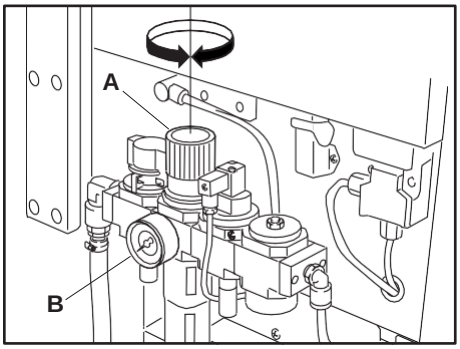

A) it adjusts the entry working pressure
B) gauge to read the entry air pressure
Optimal working pressure: 6 BAR
Feeding tube diameter: 10 mm

N.B.: in case the working pressure is below 6 BAR or the feeding tube has a small diameter, some malfunctions can happen! (es: the upper group comes down, the rear flap folder works but the machine stops)

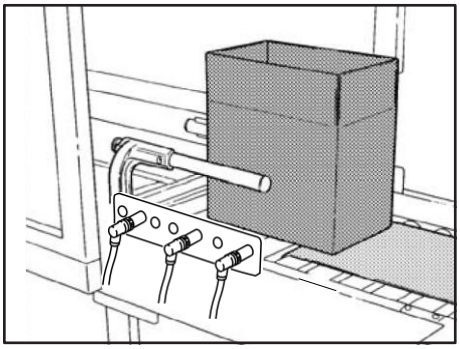

11.7 CENTERING GUIDES PRESSURE

1) Pressure regolator with built-in pressure gauge.

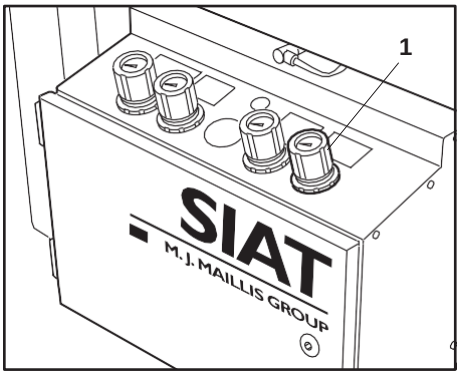

The pressure regulator **1** located on the front junction box adjusts the pressure of the centering guides of the infeed conveyor.

Working pressure: **2,5÷3,5** bar
(entry pressure: 6 bar)

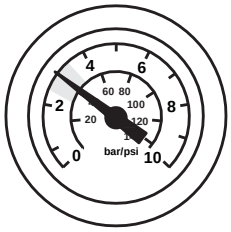

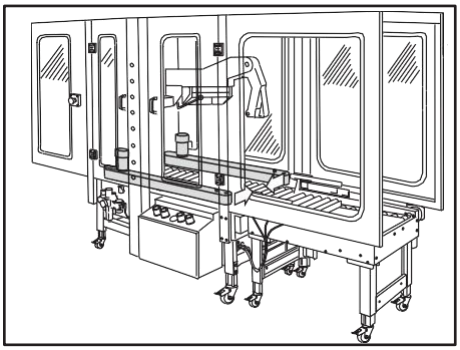

11.8 SIDE DRIVES PRESSURE ADJUSTMENT

2) Pressure regulator with built-in pressure gauge.

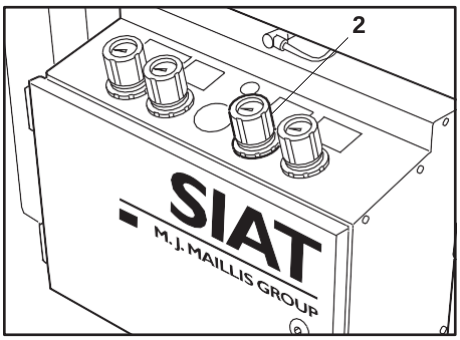

The pressure regulator **2** located on the front junction box adjusts the pressure of the side drives against the box.
-Increase for strong or heavy boxes.
-Decrease for light boxes.

Working pressure: **2,5÷3,5** bar
(entry pressure: 6 bar)

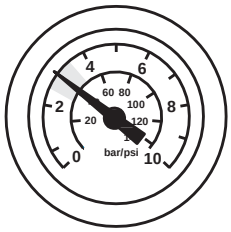

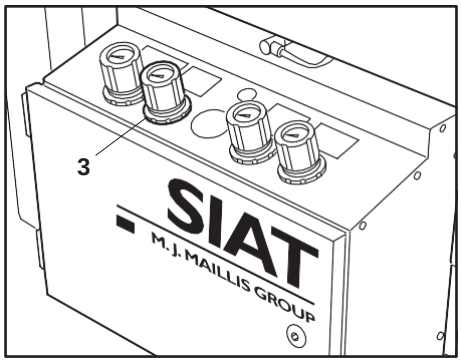

11.9 BOX HEIGHT PICK-UP

3) Pressure regulator with built-in pressure gauge.

The pressure regulator 3 adjusts the pressure according to the board strength.
-Decrease in case of light boxes.
-Increase in case of strong boxes.
-Minimum pressure must be adjusted so that the paddle returns automatically in position once the box is passed.

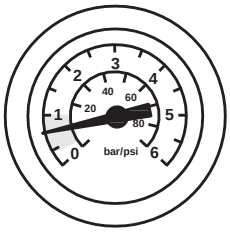

Working pressure: **0,5÷1,0** bar
(entry pressure:6 bar)

11.10 PNEUMATIC SPEED REGULATORS

A) Side belts opening-closing speed regulators

B) Centering gudes (infeed conveyor) speed regulators

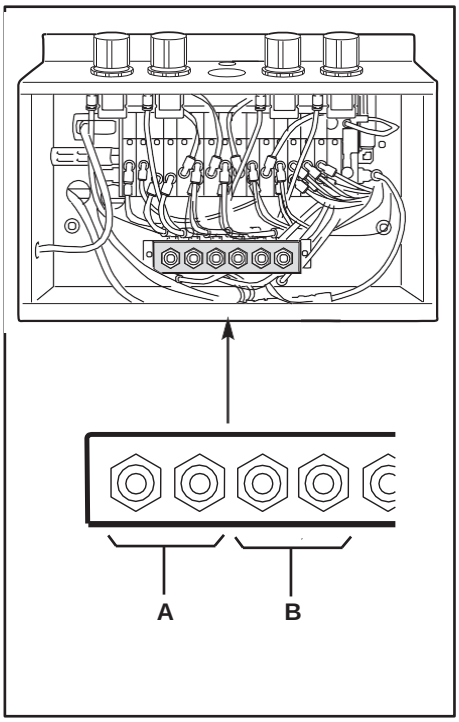

Side belts opening-closing speed regulators
These are not common operations. They have to be made only when it has been necessary to work on the pneumatic cylinder.
To change the speed, do as follows:

1) unscrew the locking nut **1**
2) turn the knob **2** clockwise to reduce the belts closing speed; anti-clockwise to increase the belts closing speed.
3) unscrew the locking nut **3**
4) turn the knob **4** clockwise to reduce the belts opening speed, unti-clockwise to increase the belts opening speed.

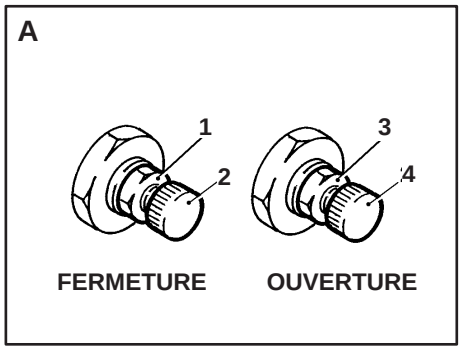

Centering guides opening-closing speed regulators
These are not common operations. They have to be made only when it has been necessary to work on the pneumatic cylinder.
To change the speed, do as follows:

1) unscrew the locking nut **1**
2) turn the knob **2** clockwise to reduce opening speed; anticlockwise to increase opening speed.
3) unscrew the locking nut **3**
4) turn the knob **4** clockwise to reduce closing speed, unticlockwise to increase closing speed.

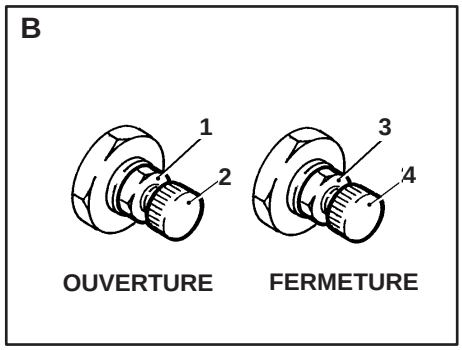

11.11 SPEED REGULATORS OF THE REAR FLAP FOLDER

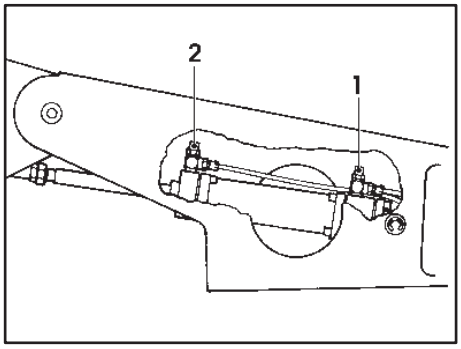

These are not common operations. They have to be made only when it has been necessary to work on the pneumatic cylinder.
To change the speed, do as follows:
The speed of the rear flap folder unit can be akjusted by the flow regulators mounted on the pneumatic cylinders.. It is necessary to introduce a screwdriver into the hole corresponding to the regulator:

1) to adjust the descent speed of the arm.
2) to adjust the ascent speed of the arm.

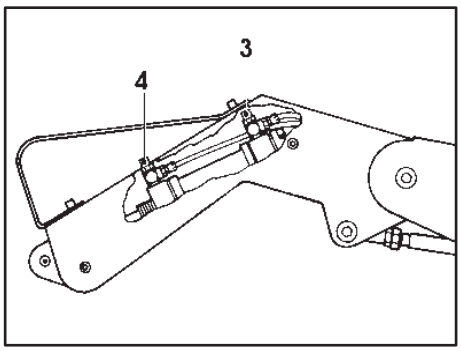

3) to adjust the descent speed of the flap folder.
4) to adjust the ascent speed of the flap folder.

12 - MACHINE USE

12.1 OPERATOR CORRECT WORKING POSITION

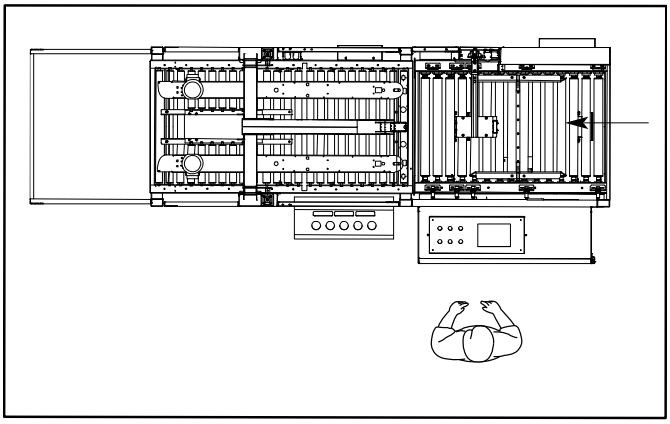

12.2 MACHINE STARTING

- Close the side safety guards
- Release the E-stops
- Give air to the circuit
- Turn the main switch in ON position
- Press the AUXILIARIES button
- Press the RESET button
- Press the START button

12.3 PRODUCTION STARTING

- Before starting, check the main functions of the machine.

1 Entry air pressure 6 BAR, if pressure is below 5,5 the machine functions are not safe.
2 Centering device pressure: 2,5÷3,5 BAR
3 Side drive belts pressure: 2,3÷3,5 BAR
4 Box height pick up pressure: suggested working pressure: 0,5÷1 BAR
5 Press the START button and check that machine stops if E-stops are pressed.
6 Press the START button and check that machine stops if side guards are opened.

12.4 TAPE REPLACEMENT

Operator skill **1**
Each time it is necessary to replace the tape roll, do as follows:
- Press the E-stop;
- Set the main switch in OFF position;
- Open the safety guard
- Do all the operations under points **11.1** and **11.2**

Pay attention to the cutting blades.

12.5 CLEANING

fore carrying out any cleaning or maintenance operation stop the machine by pressing the OFF button on the main switch.

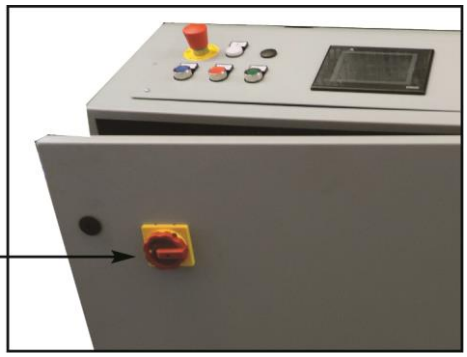

Disconnect the electric power and disconnect pneumatic circuit through valve **A**.

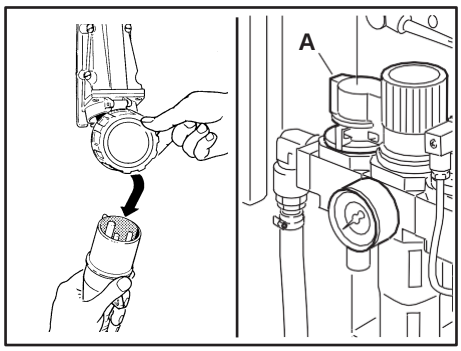

CLEANING - Skill **1** operator
Use dry clothes or light detergents.

Do not use solvents or water jets.

12.6 ADJUSTMENTS

OPERATIONS	OPERATOR'S SKILL	CHAPTER
Tape replacement	1	11.1
Tape alignment	1	11.2
Cheout of the safety devices	1	12.7
Adjustment of tape tension	1	11.3
Adjustment of height from floor level	2	7.4
Photocells adjustment	2	11.17
Side compressione rollers adjustment	2	11.15
Taping heads adjustments	2	11.2

12.7 SAFETY DEVICES CHECKOUT

1 Taping units blade guard;
2 Lockable emergency stop button;
3 Rigid protection plates mounted on the side drives;
4 Safety guards;

12.8 TROUBLE SHOOTING

SITUATION	CAUSE	SOLUTION
TROUBLE		
Tape is not centered on the box.	The side belts are not correctly positioned.	Check the position.
	The box flaps are not centered.	Check the flaps dimensions; the flaps must be equal.
	Tape is not positioned in the center of the taping head.	Adjust the tape position.
The length of the front tape leg on the box is not constat.	Tape path through the heads is not correct.	Check.
	Type unwind tension too loose.	Adjust the tension.
	Knurled roller friction too loose.	Adjust.
	Taping head idler rollers.	Clean and lubricate the rollers
The blade does not cut properly.	Adhesive on blade.	Clean.
	Tape tension not enough.	Increase the friction on the core-holder.
	Springs on cutting lever not strong enough.	Replace.
	Blade damaged (broken teeth).	Replace the blade.
The tape is not well applied on the rear of the box.	Blade does not cut properly.	Replace/Clean.
	Main spring is not tensioned.	Adjust the spring tension.
	Adhesive residues on the head rollers.	Clean and lubricate the rollers.

13-MAINTENANCE

13.0 SAFETY MEASURES

(See section 3)
Carrying out maintenance and repairs may require to work in dangerous situations. This machine has been designed making reference to the standards EN292 and EN292/2.

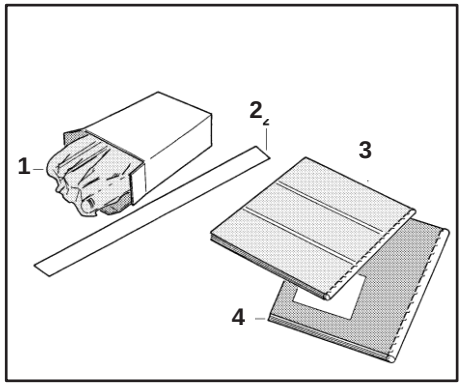

13.1 Tools kit and SPARE parts SUPPLIED WITH THE MACHINE

1 N.1 blade (spare blade for taping unit;
N.1 lower head spring
N.1 upper head spring
N.2 cutter spring
2 Tape threading tool (to feed the tape through the taping unit)
3 Instructions manual of the machine (SMB00055K)
4 Instructions manual of the taping unit

13.2 NATURE AND FREQUENCY OF MAINTENANCE OPERATIONS

OPERATIONS	FREQUENCY	OPERATORS' SKILL	CHAPTER
Lubrications	Quarterly	2	13.5-6-7
Top taping head frame inspection brakes	Every two weeks	2	13.2
Blades cleaning	Weekly	2	13.8
Machine cleaning	Wekly	1	12.5
Checkout of safety devices	Daily	1	13.4
Blades replacement	as needed	2	13.9
Belts replacement	as needed	2	13.10

13.3 CHECKS TO BE PERFORMED BEFORE AND AFTER EVERY MAINTENANCE OPERATION

Always set the main switch on '0' (Off) position;

Disconnect the plug from the mains.

During the maintenace operations only the operator performing the maintenance must work on the machine.
At the end of every maintenance operation check that all securities and the safety guards are working properly.

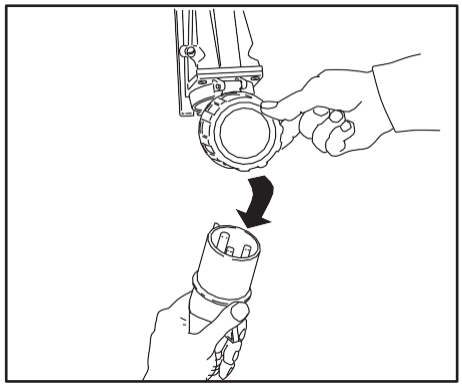

13.4 SECURITIES CH ECK-UP

1 Tape units blade guards;
2 Lockable emergency stop push-buttons;
3 Rigid protection plate mounted on the side drives;
4 Safety guards;

13.5 MACHINE LUBRICATION

Lubricate **quarterly** with grease/Metal/metal (see paragraph **13.6**):

1 Slide cross bar ball guides for side drives (grease nipples on the blocks) ;

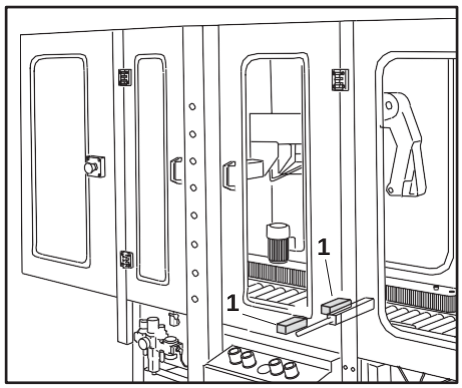

2 Columns-upper unit cross bar ball guides (grease nipples on the blocks);

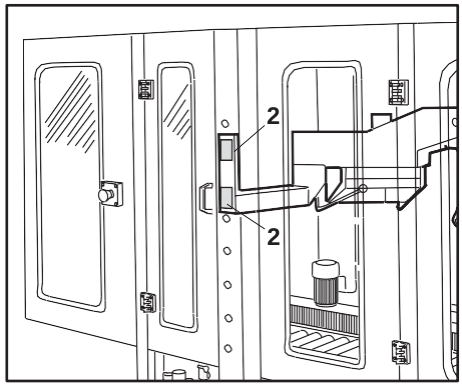

3 Side compression rollers ball guides (grease nipples on the blocks).

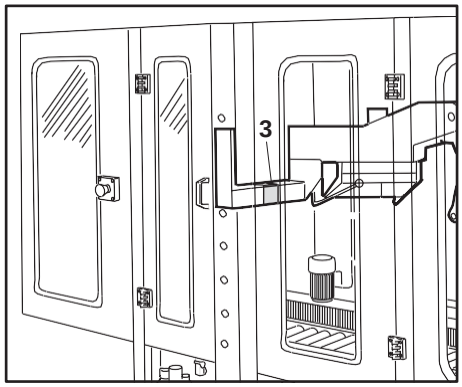

13.6 SUGGESTED PRODUCTS FOR LUBRICATION

GREASE TYPE:
METAL/METAL: B.C.190 HEAVY DUTY (otherwise grease for chains and bearings)
METAL/PLASTIC: PLATE MASTER M+L (molybdenum grease and PTFE for plastic and metallic materials)
OIL TYPE:
regular lubricating oil or general purpose spray lubricant.

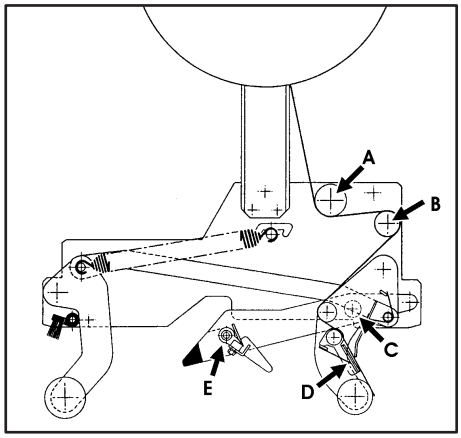

13.7 LUBRICATION OF THE TAPING UNIT

Lubricate monthly with oil the points shown on Picture.

A spring holder pin
B spring tension pin
C roller shaft
D cutter hinge
E blade guard pin

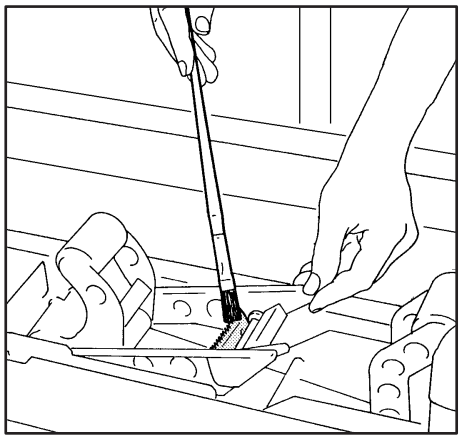

13.8 BLADE CLEANING

Skill ***2*** operator
Lift the blade guard and clean the blade by using a brush (with a long handle) and some oil. The oil prevents the adhesive clotting.

13.9 BLADE REPLACEMENT

Skill **2** operator
- Lift the blade guard as shown in Picture
- Release the screws.
- Remove the blade.

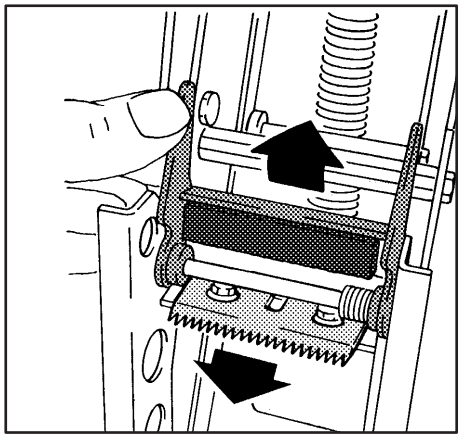

WARNING!
Very sharp blade.
Any error may lead to bad injuries.

- Insert the new blade paying attention to the position of its sharp side.
- Fix the screws.
- Release the guard..

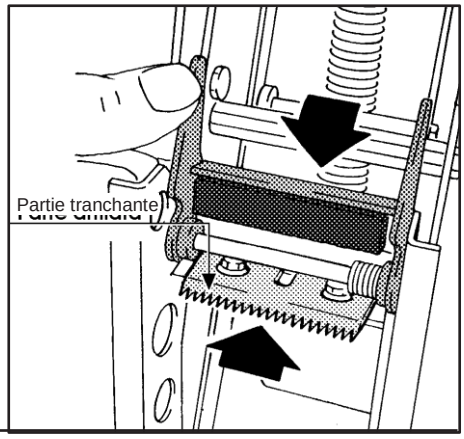

13.10 SIDE DRIVE BELTS REPLACEMENT

Skull **2** operator**.**

Notice: in order to convey the case correctly, it is necessary that both belts have the same level of wear.

Remove the plug from the mains and take the air off the circuit.

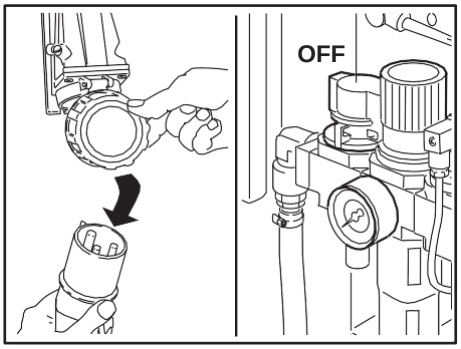

Disconnect the Klingel plug from the socket.

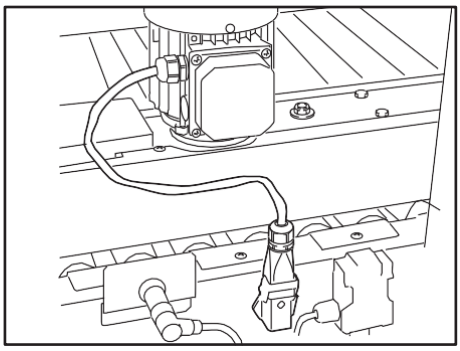

Loosen and remove the bolts that fix the connecting rod to the side flap folder.

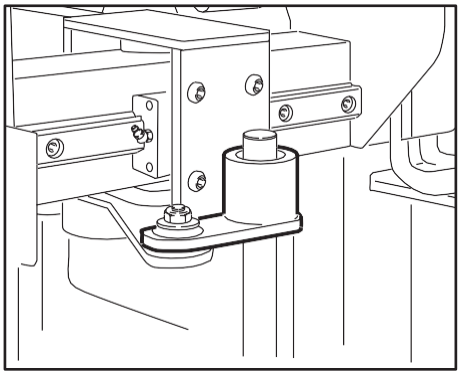

Remove the side drives locking screws.

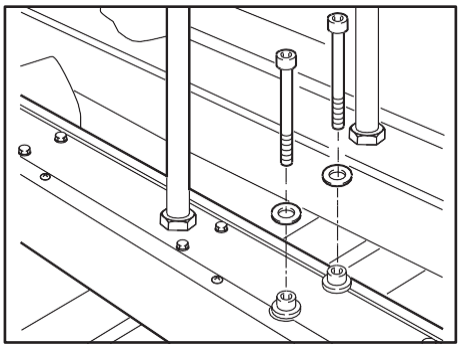

Remove the side drive and place it on a working table.

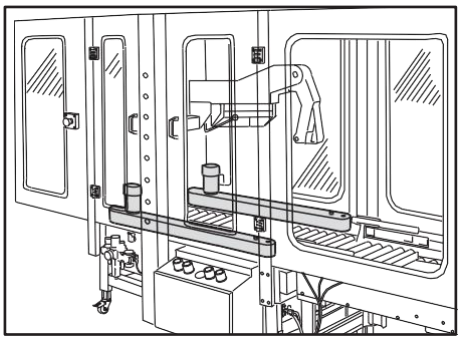

Remove the locking screws and the protection covers.

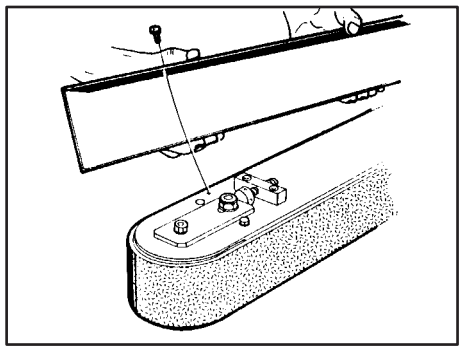

Loosen the tensioning screws.

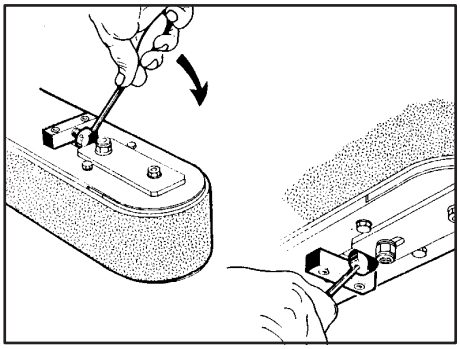

Release the nut of the tensioning plate.

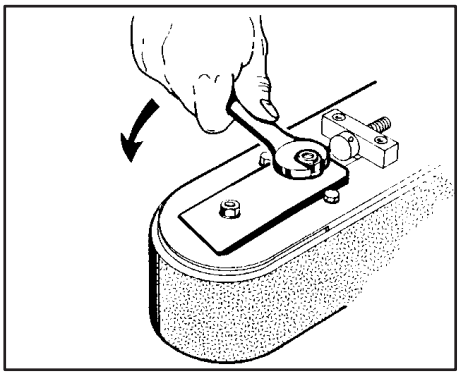

Remove and replace the drive belt.

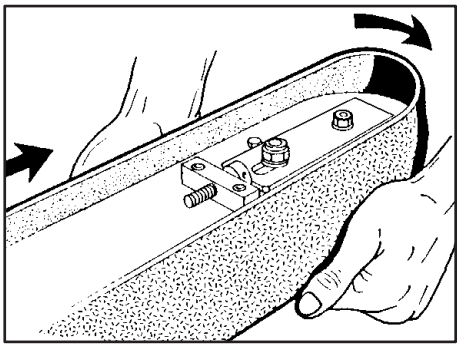

WARNING!
Before setting the new belt, check the wear of the orange plastic rings on the drive pulleys: replace them if they are worn out.

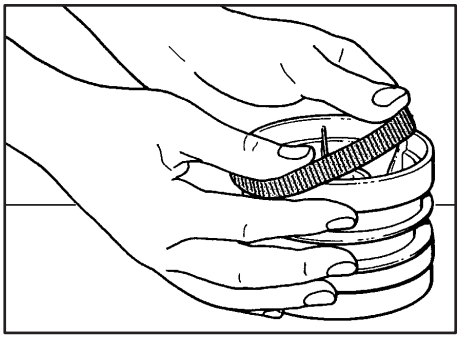

13.11 ADJUSTMENT OF THE BELTS TENSION

Check the tension of the belt by pulling it outwards in the middle.
A force of 3,5 kg should produce a gap of 25 mm (1 inch) between the belt and the frame.

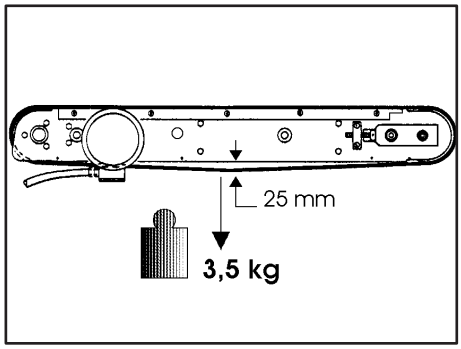

LIST OF THE MAINTENANCE OPERATIONS CARRIED OUT ON THE MACHINE

Date	Description of operation

14-ADDITIONAL INSTRUCTIONS

14.1 INSTRUCTIONS FOR SCRAPPING AND DISPOSAL OF THE MACHINE

The machine is made of the following materials:

- steel frame
- nylon conveyor rollers
- PVC drive belts
- nylon pulleys

In order to dispose of the above materials please comply with the law in force in your country.

14.2 INSTRUCTIONS ON EMERGENCY SITUATIONS

In case of danger/fire:
disconnect the electric power.

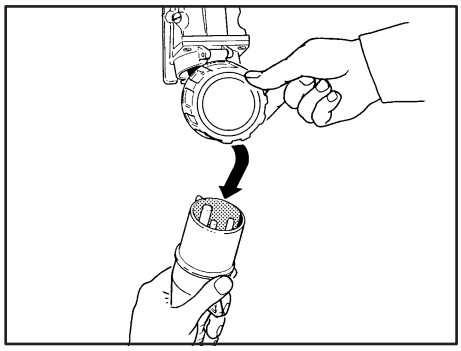

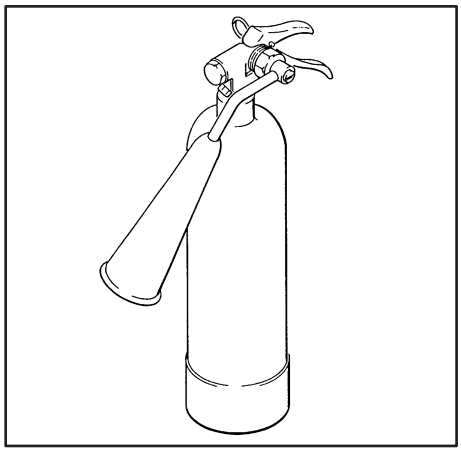

FIRE
In case of fire use an extinguisher containing CO2.

DO NOT use water.

15-ENCLOSURES

15.1 STATEMENT OF CONFORMITY

to the Directives on Machinery 2006/42 CE.

15.2 SAFETY LABELS

The safety labels are important for the correct use of the machine.
In case any label is damaged or removed, it is responsibily of the user to replace it immediately.

15.3 EMISSIONS OF RADIATIONS, GAS, VAPOURS AND DUST

Nothing to report

15.4 ELECTRIC TESTS

Electric tests:
1 - Continuity of the ground circuit
2 - Insulation resistance
3 - High voltage insulation
Reference: EN 60204-1 Section 20.2, 20.3, 20.4

SIAT
M. J. MAILLIS GROUP

SM44 HS

NASTRATRICE AUTOMATICA
AUTOMATIC CASE SEALING MACHINE
MACHINE ENRUBANNEUSE AUTOMATIQUE
AUTOMATISCHE KARTONVERSCHLIESSMASCHINE
PRECINTADORA AUTOMATICA

PARTI DI RICAMBIO
SPARE PARTS LIST
PIECES DETACHEES
ERSTAZTEILLISTE
RECAMBIOS

SIATS.p.A. - Via Puecher, 22 - 22078 TURATE (CO) ITALY - P.O. BOX 1
Tel. 02-964951 - Telefax 02-9689727
http://www.siat.com - E-Mail: siat@siat.com

Figure *Figura*	Figure description *Descrizione figura*	Product *Prodotto*	Product description *Descrizione Prodotto*
15389	**Gruppo bancale**	**SM44-HS**	**Nastratrice**

Posizione	Unità mis.	Codice SIAT	Definizione
1	PZ	S4510005647A	Bancale c/inserti
2	PZ	S4304737ZZZ	Gamba con piedino SA2 SR4
3	PZ	S4304788ZZZ	Gamba con piedino AS80
4	PZ	S350259895A	Gamba scorrevole estrusa SA2 SR4
5	PZ	S300098295A	Righella millim. Per gamba h=440 SA2-SR4
6	PZ	S310149805Z	Piedino serie 2000 nero
7	PZ	S350261500A	Gamba scorrevole L=600 AS80
8	PZ	S300105196A	Etichetta righella millimetrata H=600
9	PZ	S320589893A	Staffa per gambe e traverse
10	PZ	S320567193A	Piastrina fiss. gamba
11	PZ	S340058493Z	Vite TCEI M8X16 zincata
12	PZ	S340012393Z	Rondella piana per vite M8 zincata
13	PZ	S4510005047A	Profilo fissaggio chiusura c/inserti
14	PZ	S340031893Z	Vite TCEI M5X12 zincata
15	PZ	S3210018747A	Carter ant. canalina inf. bancale
16	PZ	S3210018647A	Carter sx canalina inf. bancale
17	PZ	S3210018547A	Carter dx canalina inf. bancale
18	PZ	S3210025547A	Carter corto canalina inf. bancale
19	PZ	S340072093Z	Vite testa mezza tonda M5X12 croce zincata
20	PZ	S4510004947A	Canalina inf. bancale c/inserti
21	PZ	S4510003247A	Carter inferiore bancale c/inserti
22	PZ	S340057793Z	Vite TCEI M6X16 zincata
23	PZ	S340017593Z	Rondella piana per vite M6 zincata
24	PZ	S3210009547A	Piastrina carter inf. bancale
25	PZ	S320804247A	Staffa per passalamiera SM44
26	PZ	S340003393Z	Rondella tripla per vite M6 zincata
27	PZ	S3210012747A	Profilo fissaggio carter su bancale
28	PZ	S4510004847A	Canalina c/inserti
29	PZ	S3210014947A	Coperchio canalina
30	PZ	S340011293Z	Vite TCEI M5X16 zincata
31	PZ	S340006193Z	Rondella piana per vite M5 zincata
32	PZ	S4510005947A	Squadretta fissaggio canalina c/inserti
33	PZ	S4510006447A	Canalina passaggio cavi bancale c/ins.
34	PZ	S3210010247A	Coperchio canalina bancale
35	PZ	S3310004700A	Blocchetto supporto traversa
36	PZ	S340012293Z	Vite TCEI M8X20 zincata
37	PZ	S340220592Z	Ranella di safety "S" (Schnorr) /8 F144
39	PZ	S3401501ZZZ	Ruota /80 Polidernyl
40	PZ	S320245593Z	Distanziale per ruote SM481
41	PZ	S320724493A	Attacco ruota AS77
42	PZ	S340006293Z	Rondella piana per vite M12 zincata
43	PZ	S340073593Z	Dado M12 autobloccante
44	PZ	S340041592Z	Grano EIPP M8X8 brunito
45	PZ	S780433700B	Set ruote /80

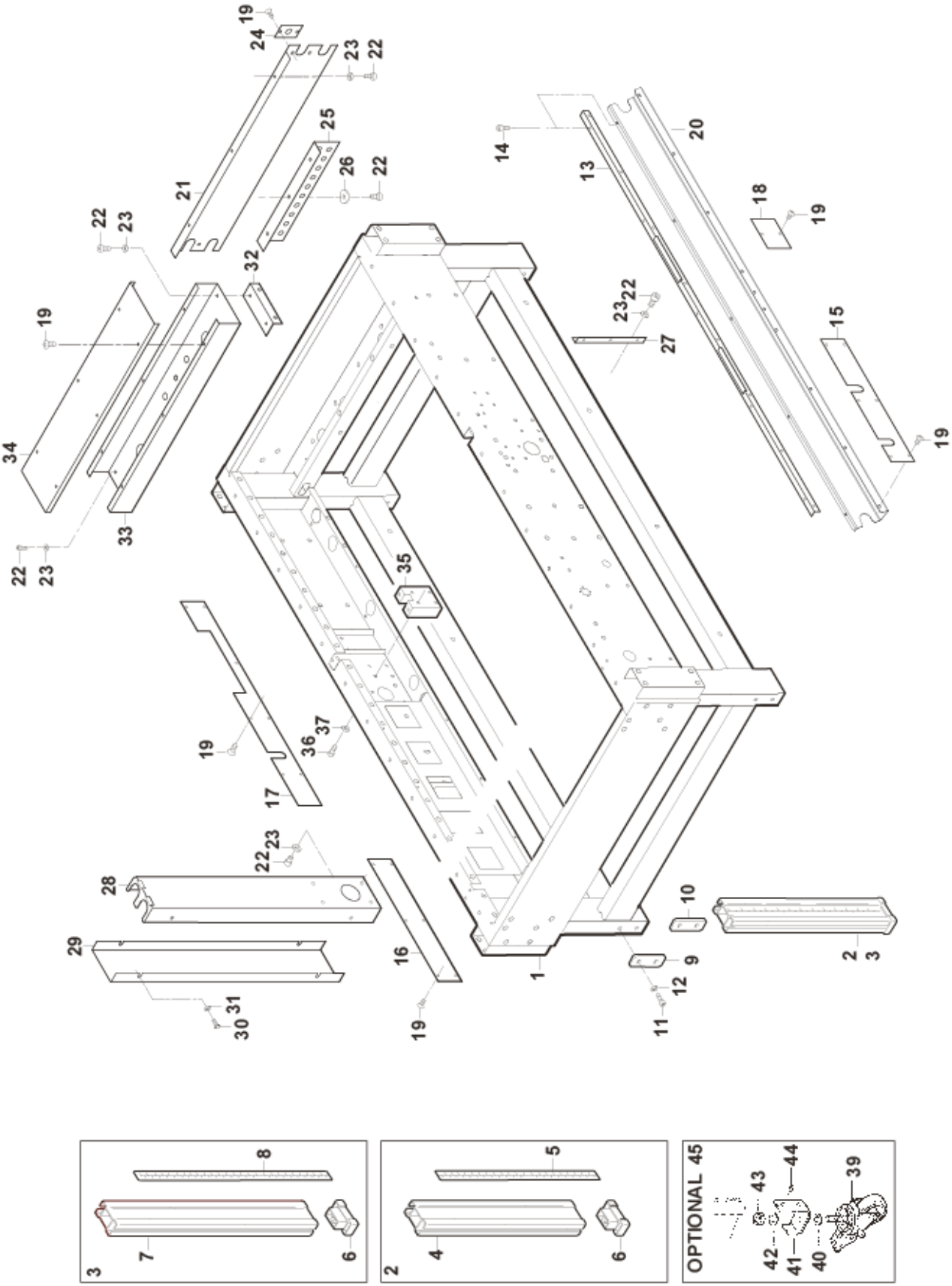

SM44-HS Sett. 2013 Fig. **15389**

Figure *Figura*	Figure description *Descrizione figura*	Product *Prodotto*	Product description *Descrizione Prodotto*
15390	**Traversa motorizzazioni**	**SM44-HS**	**Nastratrice**

Posizione	Unità mis.	Codice SIAT	Definizione
1	PZ	S4510003147A	Traversa guida motorizzazioni c/inserti
2	PZ	S4710003200A	Pignone 3/8" Z35 c/cuscinetto
3	PZ	S3310004292A	Pignone Z=35 p=3/8"
4	PZ	S3400156A	Cuscinetto 6005-2RS1 SKF
5	PZ	S340019192Z	Anello arresto per foro 47
6	PZ	S330491693Z	Rondella /6,5/30X5
7	PZ	S340002693Z	Vite TE M6X16 zincata
8	PZ	SCA0000775	Rotaia guida lineare mod. HRS30-760LG
9	PZ	S340004793Z	Vite TCEI M8X30 zincata
10	PZ	S340028393Z	Dado autobloccante M8 baso zincato
11	PZ	S340012393Z	Rondella piana per vite M8 zincata
12	PZ	SCA0000776	Pattino guida lineare mod. HRS30LASSG
13	PZ	S3310004993A	Blocchetto inf. supporto motorizzazioni
14	PZ	SBC0015307T	Blocchetto vert. supp. motorizz. SM44
15	PZ	S340020693Z	Vite TCEI M10X20 zincata
16	PZ	S4410002147A	Piastra laterale guida mot. c/perno
17	PZ	S340017593Z	Rondella piana per vite M6 zincata
18	PZ	S3310004593A	Forcella sinistrorsa
19	PZ	S3310004493A	Forcella destrorsa
20	PZ	S3310004393A	Giunto catena
21	PZ	S330560293Z	Vite tendicatena dx/sx SM4/F-104
22	PZ	S340004593Z	Vite TE M5X20 zincata
23	PZ	S340025993Z	Dado autobloccante M5 zincato
24	PZ	S340006193Z	Rondella piana per vite M5 zincata
25	PZ	S3400278ZZZ	Maglia di giunzione P=9,525
26	PZ	SCA0000362	Spezzone catena aperto P=3/8" L=57passi
27	PZ	S340058493Z	Vite TCEI M8X16 zincata
28	PZ	SCB0000445	Flangia oscillante SNCL-40 "Festo"
29	PZ	S3210009747A	Piastra fissaggio cilindro
30	PZ	S340026793Z	Vite TE M6X30 zincata
31	PZ	S340211493Z	Dado autobloccante M6 zincato
32	PZ	S3802289ZZZ	Raccordo gomito 31990813
33	PZ	S340101693Z	Testa snodo M12X1,25 zincata
34	PZ	S3110000900A	Tampone cilindro motorizzazione
35	PZ	S320145093Z	Rondella speciale /12/45,5X4
36	PZ	S340003393Z	Rondella tripla per vite M6 zincata
37	PZ	S340002193Z	Vite TE M6X12 zincata
38	PZ	S380611400A	Finecorsa SME-8M-DS-24V-K-0,3-M8D

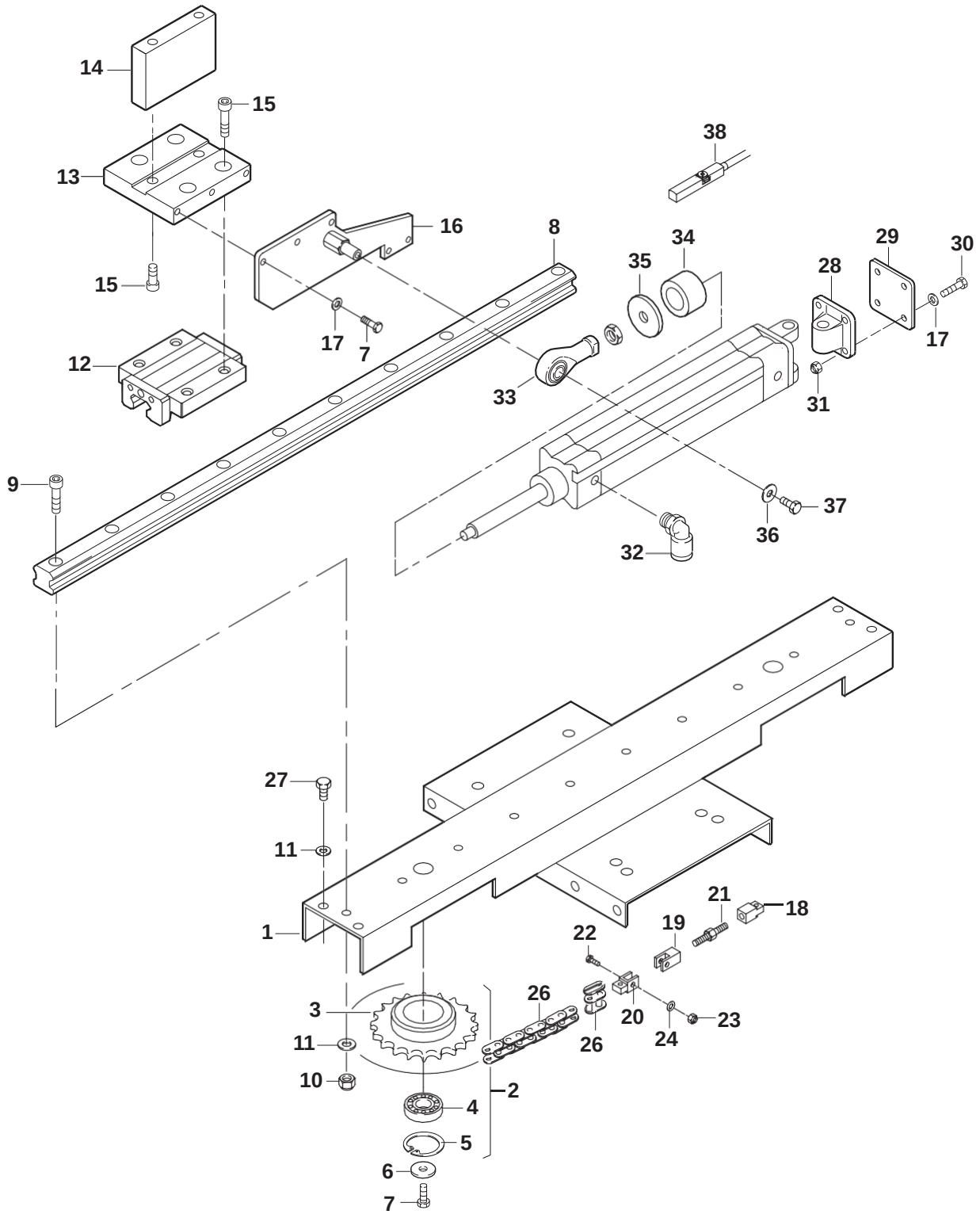
14
15
13
15
16
8
38
34
35
29
30
28
17
7
12
33
31
17
9
37
36
32
27
11
1
21
18
19
22
3
26
20
23
11
26
24
10
2
4
5
6
7

Figure *Figura*	Figure description *Descrizione figura*	Product *Prodotto*	Product description *Descrizione Prodotto*
15391	**Pressatori laterali**	**SM44-HS**	**Nastratrice**

Posizione	Unità mis.	Codice SIAT	Definizione
1	PZ	S3210014247A	Piastra inf. dx pressatori laterali
2	PZ	S3210014300A	Piastra inf. sx pressatori laterali
3	PZ	S3210014547A	Piastra sup. pressatori laterali
4	PZ	S3310004147A	Blocchetto unione piastre
5	PZ	S340005393Z	Vite TSVEI M6X16 zincata
6	PZ	S340040393Z	Vite TSVEI M5X16 zincata
7	PZ	S340002393Z	Dado M5 zincato
8	PZ	S340006193Z	Rondella piana per vite M5 zincata
9	PZ	SCB0000415	Raccordo QSM-M3-4-I "Festo"
10	PZ	S310175300A	Pressatore laterale SM8-P
11	PZ	S350207593Z	Perno per rulli pressatori 700A
12	PZ	S330535393Z	Rondella /8,5X25X4
13	PZ	S340028093Z	Vite TE M8X20 zincata
14	PZ	S340065593Z	Rondella tripla per vite M8 zincata
15	PZ	S3801683ZZZ	Raccordo Y LEGRIS31400600
16	PZ	S340507793A	Vite TBEI M8X20 zincata
17	PZ	S4310000100A	Biella c/cuscinetto e ammortizz.
18	PZ	S4410002747A	Biella
19	PZ	SCA0000861	Passacavo in gomma serie "EZ" 15089
20	PZ	G15320201ZZ	Manicotto a sfere 0670-220-40
21	PZ	S3310005193A	Bussola per ammortizzatore
22	PZ	S340017293Z	Vite TSVEI M8X30 zincata
23	PZ	S340028393Z	Dado autobloccante M8 basso zincato
24	PZ	SBC0016029	Asta guida pressatori SM44-HS
25	PZ	SCA0000769	Pattino per guida lineare MOD.HRS25ASSG
26	PZ	S4210000000A	Piastra di bloccaggio c/tampone

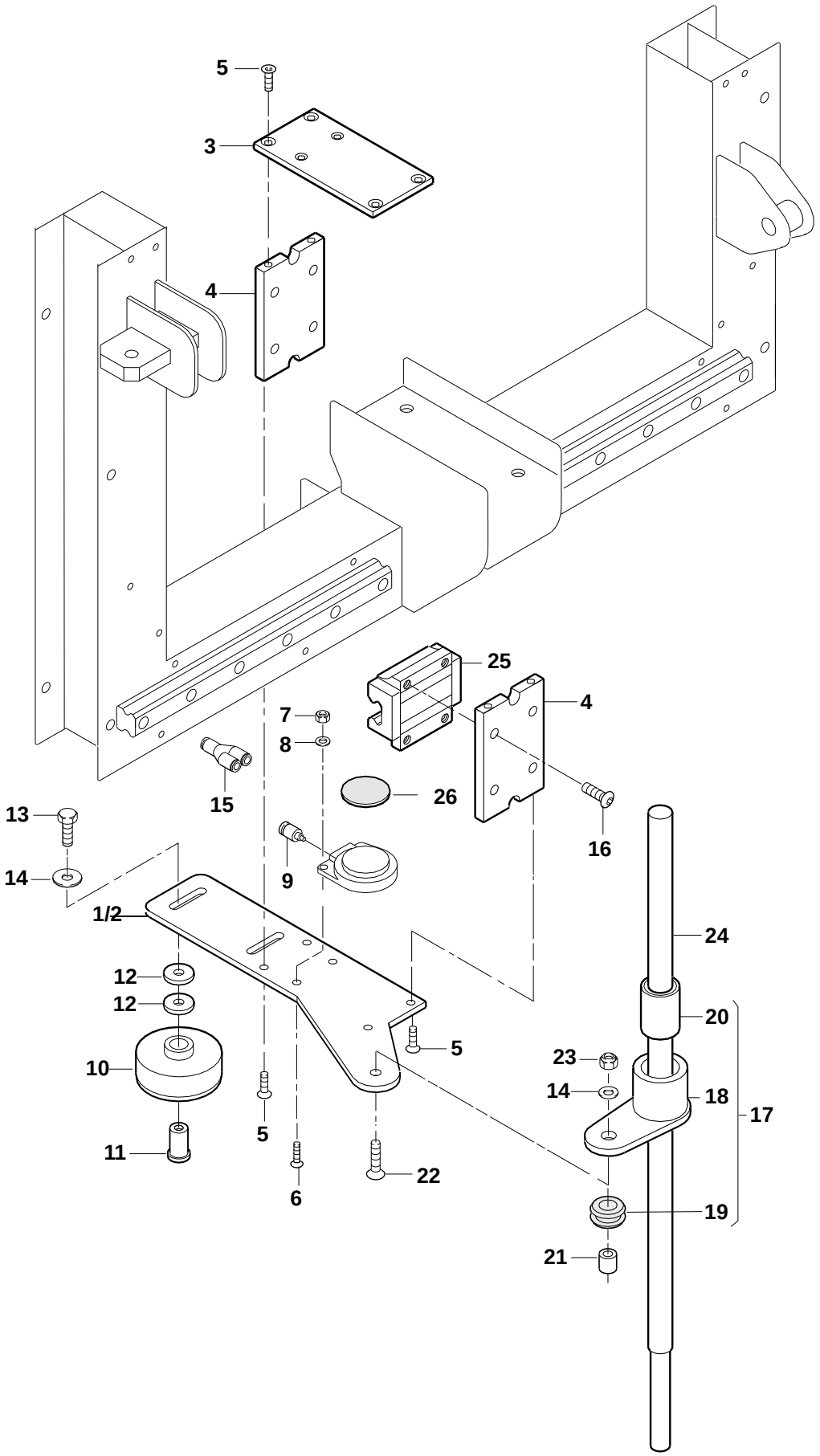
5
3
4
25
4
7
8
15
26
16
13
14
9
1/2
24
12
12
20
5
23
10
14
18
17
5
11
22
6
19
21

Figure *Figura*	Figure description *Descrizione figura*	Product *Prodotto*	Product description *Descrizione Prodotto*
15392	**Chiudifalda posteriore**	**SM44-HS**	**Nastratrice**

Posizione	Unità mis.	Codice SIAT	Definizione
1	PZ	SBA0010104V	Supporto chiudifalde sup. ass. SM44-HS
2	PZ	SBA0010105V	Braccio chiudifalde ass. SM44HS
3	PZ	S4304333ZZZ	Flagia con dadi e cuscinetti
4	PZ	SBC0017120T	Perno braccio chiudifalde sup. SM44HS
5	PZ	S471229100A	Chiudifalda post. ass. 800rf/3M
6	PZ	S440750893A	Chiudufalda ass. 800rf/3M zincato
7	PZ	S331071092Z	Perno attacco chiudufalda
8	PZ	S3400193ZZZ	Cuscinetto 6000 2RS
9	PZ	S331140793Z	Distanziale per cuscinetto SM11/XL33
10	PZ	S330634493A	Perno /12X51 SM11 zincato
11	PZ	S340101693Z	Testa a snodo M12X1,25 zincata
12	PZ	SBC0000845T	Distanziale su braccio chiudifalde
13	PZ	S310225800A	Distanziale per cilindro
14	PZ	S330634293Z	Perno forato /5,25/8X51 zincato
15	PZ	S332304493A	perno per chiudifalfde post. zincato
16	PZ	SBC0000843T	Distanziale chiudifalda posteriore
17	PZ	S340224593Z	Vite TCEI M5X65 zincata
18	PZ	S340028093Z	Vite TE M8X20 zincata
19	PZ	S340012393Z	Rondella piana per vite M8 zincata
20	PZ	S330787693Z	Vite TE M6X16 spec.
21	PZ	S340000693Z	Rondella dentellata per vite M6
22	PZ	S330535693Z	Vite TE M6X12 spec.
23	PZ	S340002193Z	Vite TE M6X12 zincata
24	PZ	S340017593Z	Rondella piana per vite M6 zincata
25	PZ	S340101093Z	Testa a snodo M10X1,25 zincata
26	PZ	S3210014447A	Squadretta per molla a bandella
27	PZ	S320157784B	Prolunga chiudifalda post. SM44
28	PZ	S340072093Z	Vite testa mezza tonda M5X12 croce zincata
29	PZ	SBA0010149	Carter post. c/ins. supp. chiudif.SM44
30	PZ	S470947400A	Chiudifalde laterale regolab. ass. SM/XL
31	PZ	S330943093D	Chiudifalde laterali
32	PZ	S331620993B	Fiss. chiudifalde laterali
33	PZ	S331621017B	Piastrina per chiudif. laterale SM11
34	PZ	S340004793Z	Vite TCEI M8X30 zincata
35	PZ	S340005193Z	Vite TCEI M6X12 zincata
36	PZ	S340003393Z	Rondella tripla per vite M6 zincata
37	PZ	S340022592Z	Grano EIPP M6X20 brunito
38	PZ	S460197903Z	Pomolo completo
39	PZ	S340299793Z	Vite TCEI M8X100 zincata 120af
40	PZ	S340028393Z	Dado autobloccante M8 basso zincato
41	PZ	S340048693Z	Vite TCEI M8X25 zincata
42	PZ	S340006392Z	Rondella elastica diam. 8
43	PZ	SCC0001412	Raccordo dritto PA6 NW23 M32-B
44	PZ	SCC0001413	Controdado PA M32 P68032
45	PZ	S340057793Z	Vite TCEI M6X16 zincata
46	PZ	SBC0017124V	Carter superiore chiudifalde SM44HS
47	PZ	S330635193Z	Perno /12X100 SM11 zincato
48	PZ	S340006293Z	Rondella piana per vite M12 zincata
49	PZ	S340094592Z	Anello di sicurezza 8 DIN 6799

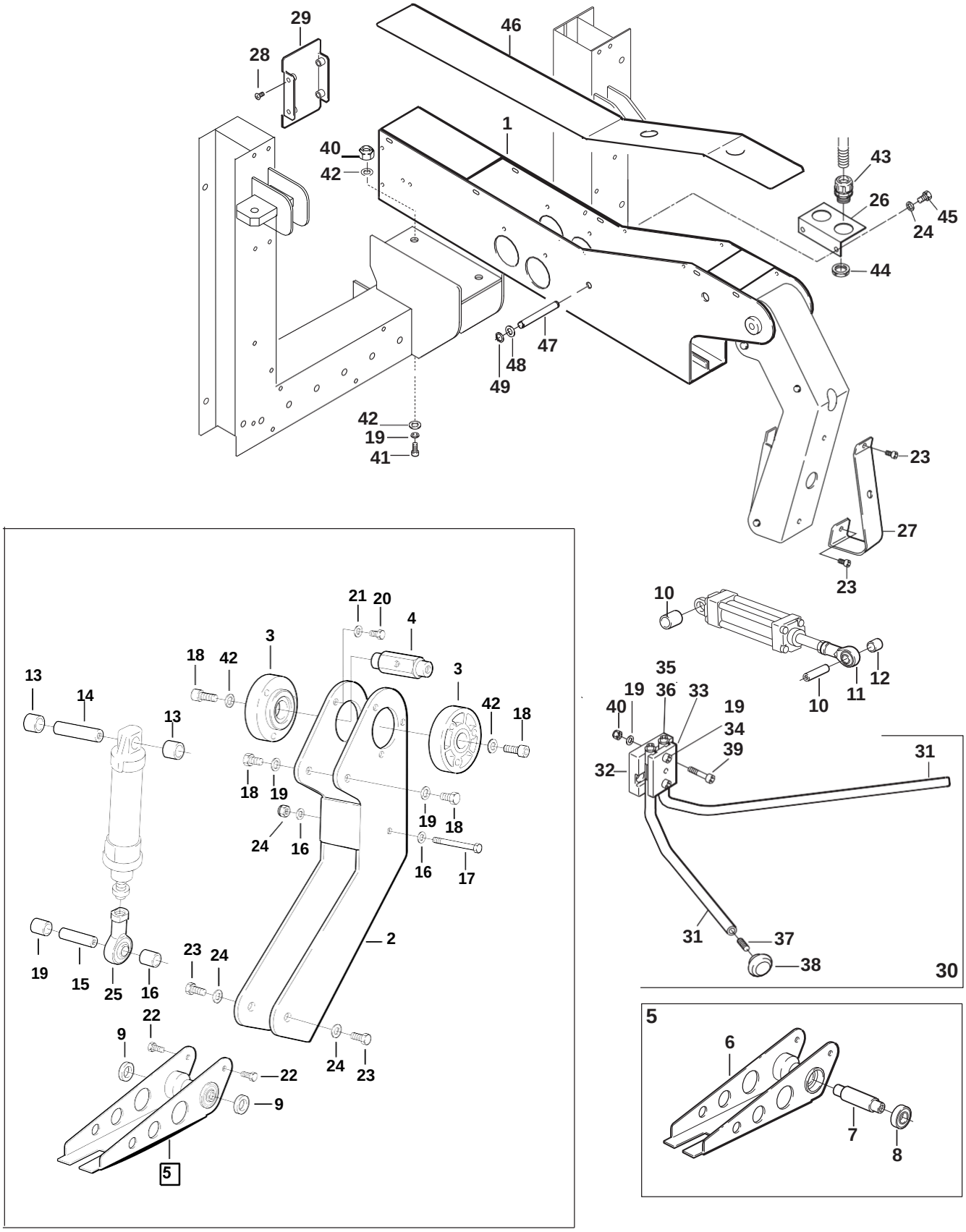
29
28
46
1
40
42
43
26
45
24
44
47
48
49
42
19
41
23
27
23
10
12
11
10
35
19
36
33
40
19
34
39
32
31
31
37
38
30
21
20
4
3
18
42
3
13
14
13
42
18
18
19
24
16
19
18
16
17
2
19
15
25
16
23
24
22
9
22
24
23
9
5
5
6
7
8

Figure *Figura*	Figure description *Descrizione figura*	Product *Prodotto*	Product description *Descrizione Prodotto*
16022	**Gruppo protezioni**	**SM44-4HS**	**Nastratrice**

Posizione	Unità mis.	Codice SIAT	Definizione
1	PZ	SBA0006397	Montante in tubolare c/ins. SM11S
2	PZ	SBA0008454	L=430
3	PZ	SBC0007078V	Cerniera fissa
5	PZ	SBA0008456	L=700
8	PZ	SBA0008457	Pan fix L 700
14	PZ	S340398000A	Cern. -ELESA- CFA.65 CH-6 COD.422232 SM
15	PZ	S3801095ZZZ	Maniglia M443/110
17	PZ	S340057793Z	Vite TCEI M6X16 zincata
20	PZ	S450480817Z	Supporto int. con insertiHM11-T
21	PZ	S320580617A	Piastrina di chiusura HM11-T
22	PZ	S340072093Z	Vite testa mezza tonda M5X12 croce zincata
23	PZ	S340002393Z	Dado M5 zincato
24	PZ	S340006193Z	Rondella piana per vite M5 zincata
25	PZ	S3210011547A	Squadretta fissaggio blocco a scatto
26	PZ	S3210011347A	Squadretta fissaggio sportello
27	PZ	S3210011247A	Squadretta interruttore di sic.
28	PZ	S340031893Z	Vite TCEI M5X12 zincata
29	PZ	S3401707ZZZ	Aggancio per blocco a scatto T330
30	PZ	S3401601ZZZ	Blocco a scatto spec. F144
31	PZ	S340051693Z	Vite TSVEI M5X12 zincata
32	PZ	S340025993Z	Dado autobloccante M5 zincato
37	PZ	S3802139ZZZ	Bocchettone skintop ST11
38	PZ	S3802144ZZZ	Controdado GMP13,5
39	PZ	S340012293Z	Vite TCEI M8X20 zincata

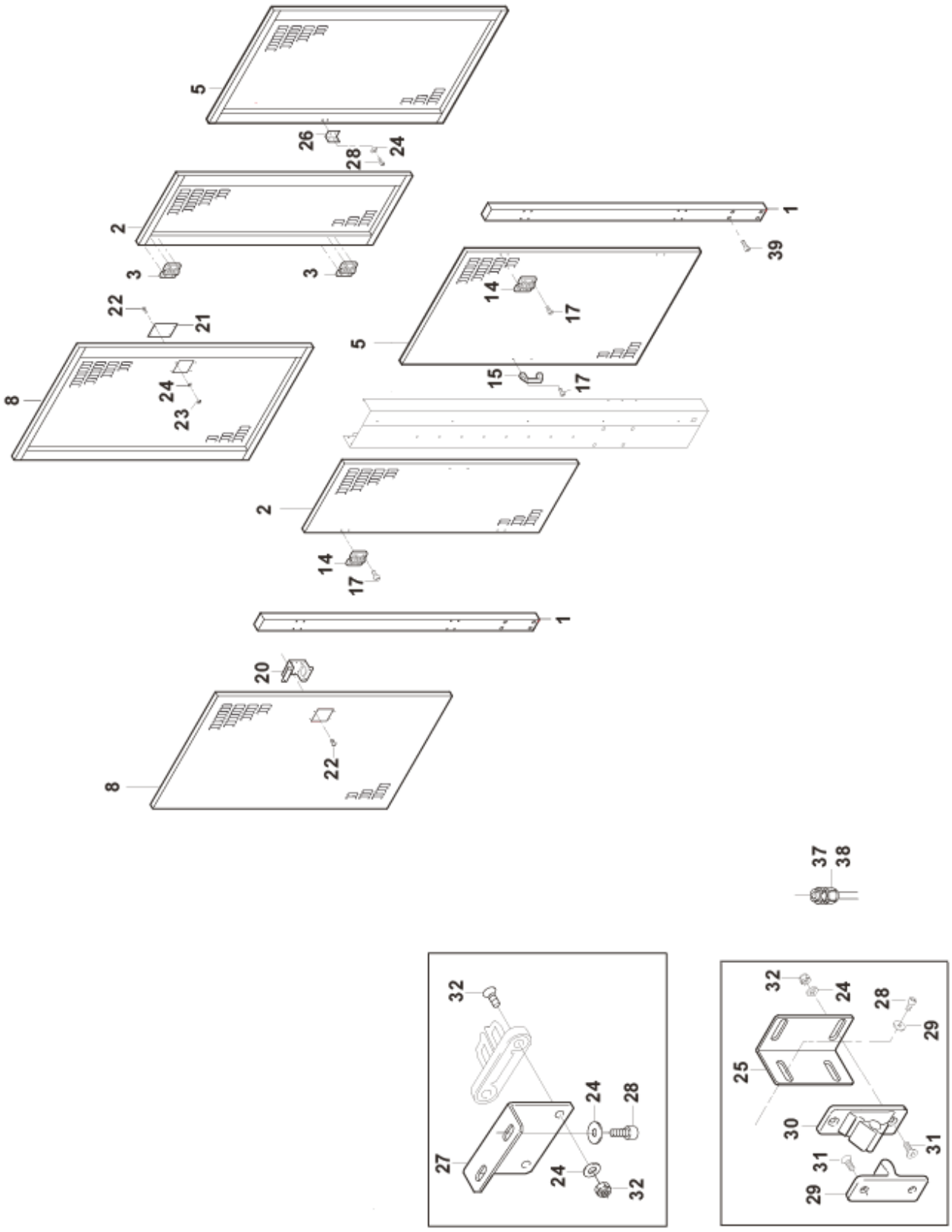
5
26
28
24
2
3
3
22
21
8
24
23
1
39
5
14
17
15
17
2
14
17
1
20
8
22
37
38
32
24
28
29
25
30
31
31
29
32
24
28
27
24
32

Figure *Figura*	Figure description *Descrizione figura*	Product *Prodotto*	Product description *Descrizione Prodotto*
15394	**Gruppo porta unità sup.**	**SM44-HS**	**Nastratrice**

Posizione	Unità mis.	Codice SIAT	Definizione
1	PZ	SBC0014865V	Spalla porta unita AS24-HS
2	PZ	SBC0014872	Scivolo destro AS24-HS
3	PZ	SBC0014871	Scivolo sinistro AS24-HS
4	PZ	SBC0014869V	Carter spalla porta unita AS24-HS
5	PZ	S330892993Z	Distanziale 10X10X150
6	PZ	S332586695A	Bloc. destro fissaggio K13 TOP - 120af-3M
7	PZ	S332586795A	Bloc. sx fissaggio K13 TOP - 120af-3M
8	PZ	S340037193Z	Vite TE M5X12 zincata
9	PZ	S340006193Z	Rondella piana per vite M5 zincata
10	PZ	S340017593Z	Rondella piana per vite M6 zincata
11	PZ	S340002693Z	Vite TE M6X16 zincata
12	PZ	S340005793Z	Vite TE M6X20 zincata
13	PZ	S3403407ZZZ	Manopola zigrinata B.193/20 P-M6X25
14	PZ	S340211493Z	Dado autobloccante M6 zincato

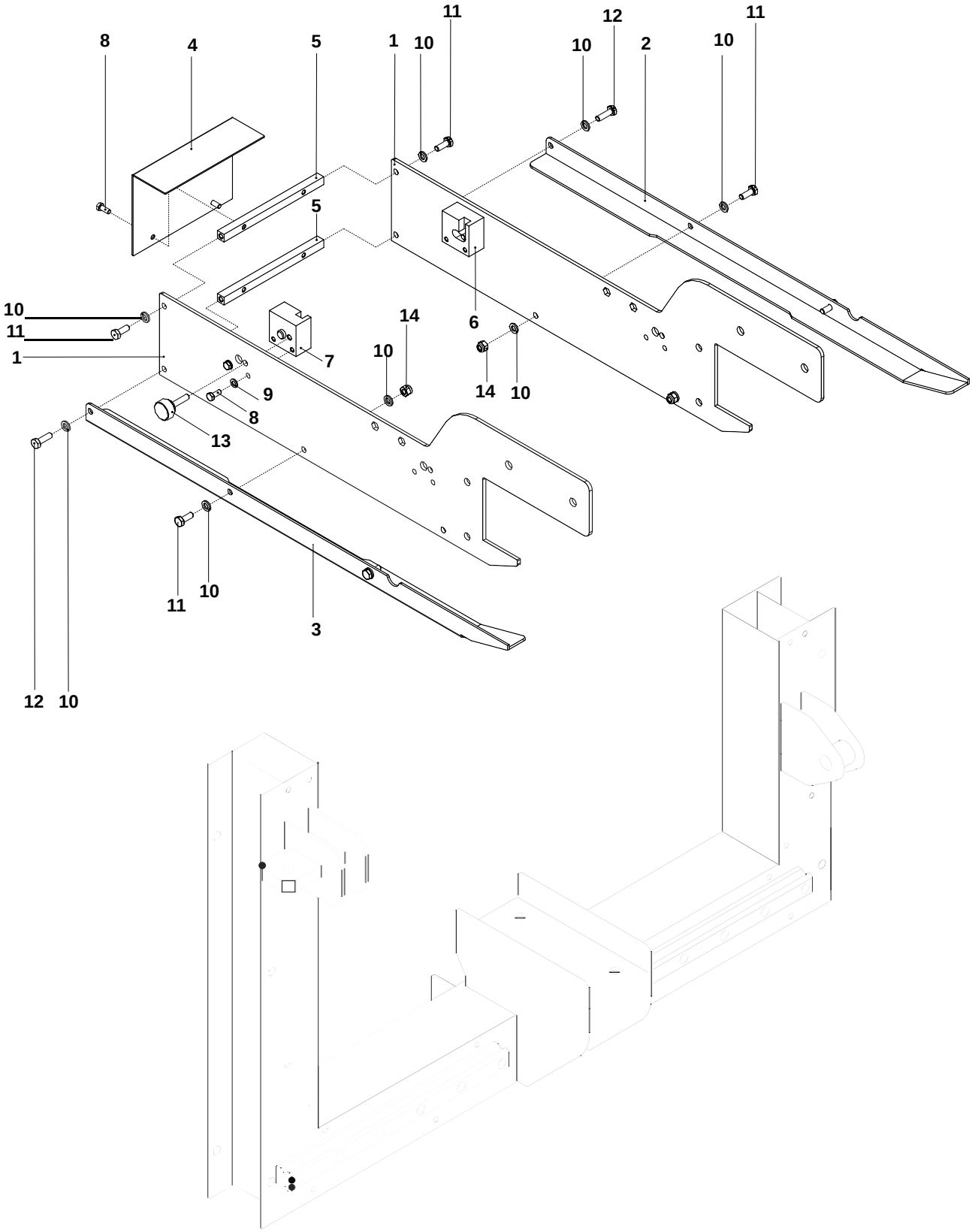
8
4
5
1
10
11
12
10
2
10
11
5
6
10
11
1
7
14
10
14
10
9
8
13
11
10
3
12
10

Figure *Figura*	Figure description *Descrizione figura*	Product *Prodotto*	Product description *Descrizione Prodotto*
15395	**Gruppo porta unità inf.**	**SM44-HS**	**Nastratrice**

Posizione	Unità mis.	Codice SIAT	Definizione
3	PZ	S330628493Z	Distanziale 12X12X140 SM11 zincato
4	PZ	S340002193Z	Vite TE M6X12 zincata
5	PZ	S340017593Z	Rondella piana per vite M6 zincata
6	PZ	S340058493Z	Vite TCEI M8X16 zincata
7	PZ	S340012393Z	Rondella piana per vite M8 zincata

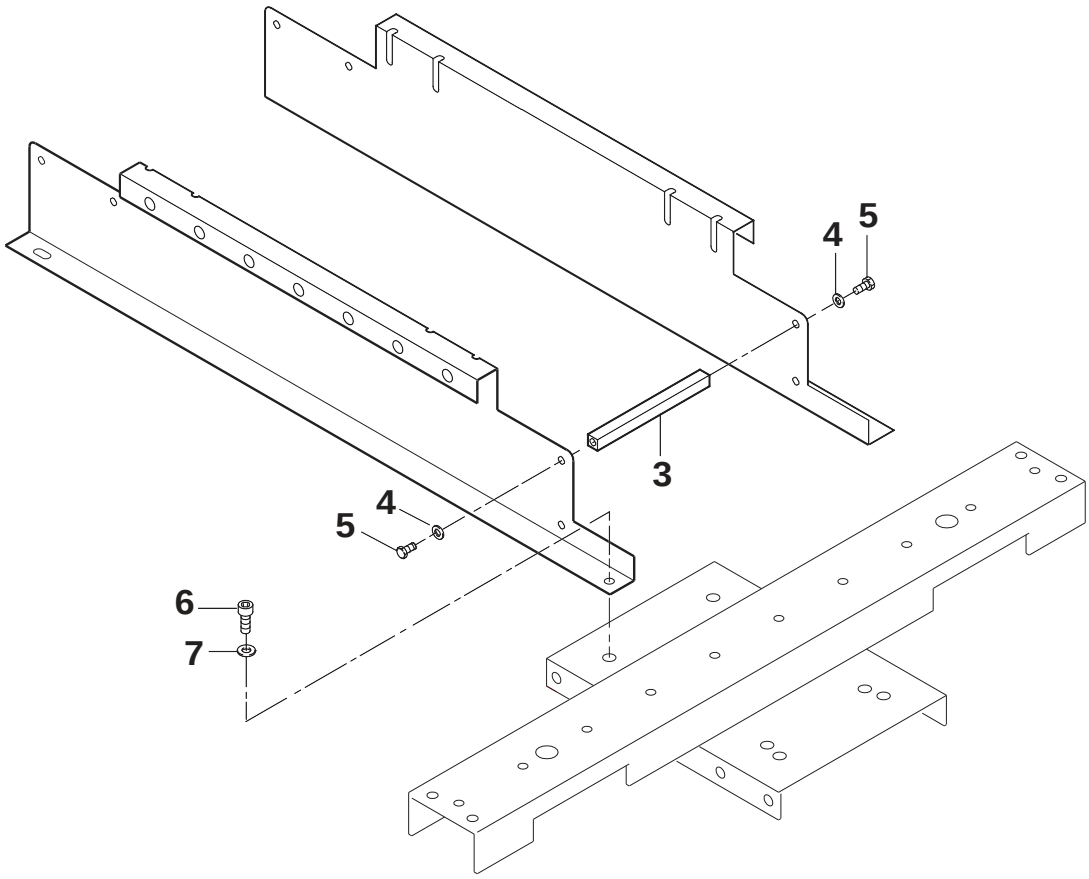
5
4
3
4
5
6
7

Figura	Descrizione figura	Magazzino	Prodotto	Descrizione
15797	kit upgrade guide mot.	SBA0014710	SM44-HS	

Posizione	Ricambio	Descrizione	Quantità	U.M.
1	SBC0024103T	blocchetto ant. Sup. mot.	2	pz
2	SCA0001705	carrello thk-hsr-20-a-1ss-c0	2	pz
3	SBC0024105	rotaia guida lineare mod. hsr20 320 lg	2	pz
4	SBC0024106V	traversa supp. Guide sm44	2	pz
5	SBC0023360T	piatto fiss. Mot.	2	pz
6	SBC0024108T	blocchetto vert. Sup. mot.	2	pz
7	SBA0014781	spalla dx porta unità inf. c\ins. Sm44	1	pz
8	SBA0014782	spalla sx porta unità inf. c\ins. Sm44	1	pz
9	S340016093Z	vite tcei m6x20 zinc.	12	pz
10	S340001593Z	vite tcei m6x25 zinc.	8	pz
11	SBC0024115T	piatto supp. Trav. Ant.	2	pz
12	SBC0024113V	piastra fiss. Supp. Guida	2	pz
13	S340010893Z	vite tcei m5x20 zinc.	12	pz
14	S340006193Z	rondella piana x vite m5 zinc.	12	pz
15	S340002393Z	dado m5 zinc.	12	pz
16	S340017593Z	rondella piana x vite m6 zinc.	24	pz
17	S340023593Z	dado m6 zinc. A bassa resist.	8	pz
18	S340057793Z	vite tcei m6x16 zinc.	16	pz
19	SBC0024114V	dima foratura sm44	1	pz

Data Lugl. 2013

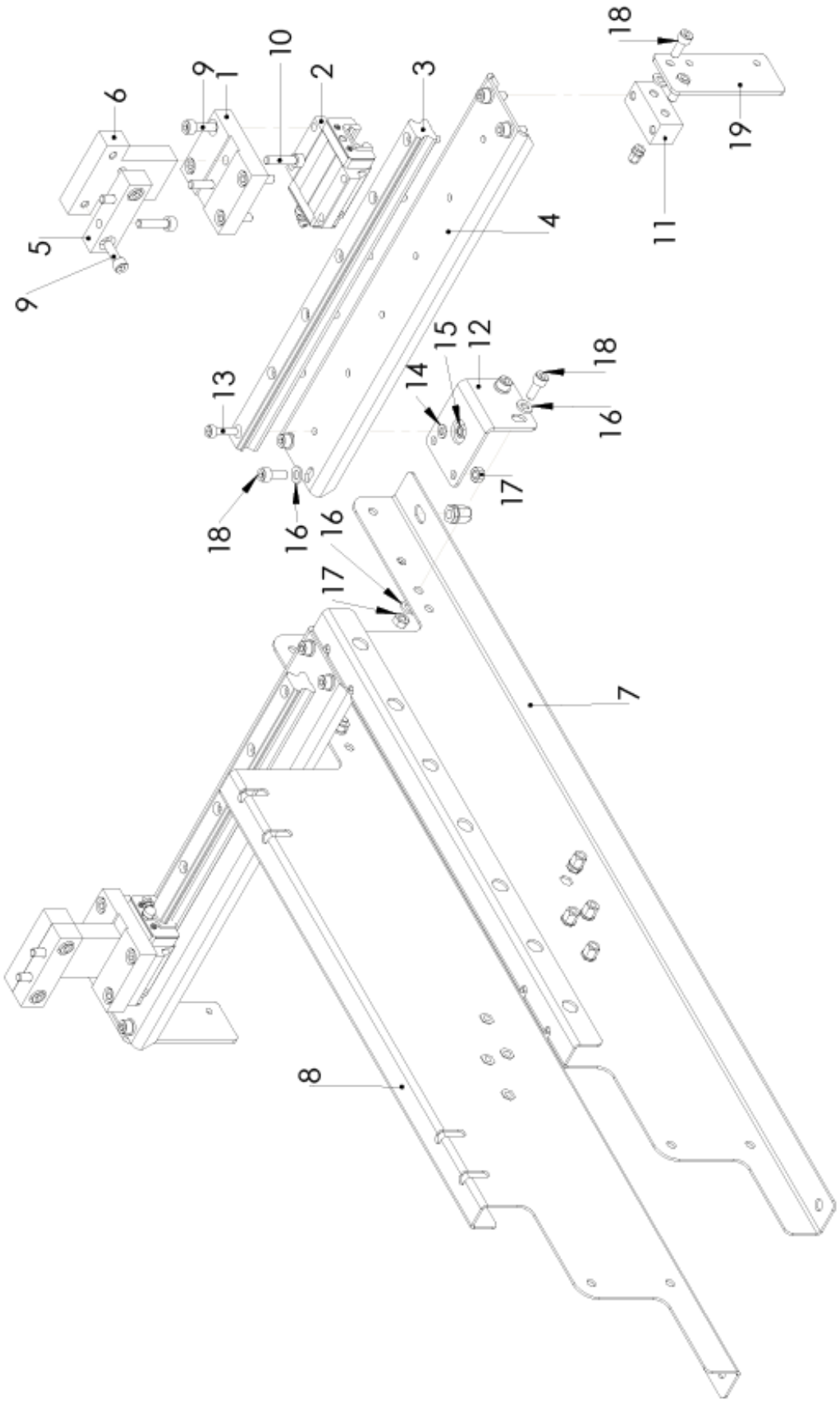

SM44-HS

Lug. 2013

Fig. **15797**

Figure *Figura*	Figure description *Descrizione figura*	Product *Prodotto*	Product description *Descrizione Prodotto*
15396	**Gruppo motorizzazioni**	**SM44-HS**	**Nastratrice**

Posizione	Unità mis.	Codice SIAT	Definizione
1	PZ	SBA0009045	Motorizz. dx 220/240-380/415V 50HZ SM44
2	PZ	S4510005247A	Guida sup. dx motorizz. c/inserti
3	PZ	S4510005447A	Guida inf. dx motorizz. c/inserti
4	PZ	S330596093Z	Distanziale es.10X81 SM11 zincato
5	PZ	S340002193Z	Vite TE M6X12 zincata
6	PZ	S340017593Z	Rondella piana per vite M6 zincata
7	PZ		
8	PZ	SBA0001152	Puleggia motrice post. ass.
9	PZ	SBA0001154	Puleggia motrice ass. c/anelli
10	PZ		
11	PZ	S4603370ZZZ	Flangia compl. Di cuscinetto e dadi SM11
12	PZ	S3400281ZZZ	Linguetta 5X5X12
13	PZ	S340051693Z	Vite TSVEI M5X12 zincata
14	PZ	S330595193Z	Rondella 5,5X/20X4
15	PZ	SBA0001151	Puleggia motrice dentata ass.
16	PZ	S460425600A	Puleggia PD30-L075F assemblata F144
17	PZ	S470405100A	Galoppino ass. SM11 12AF XL
18	PZ	S330906792Z	Galoppino tendicinghia
19	PZ	S330906892Z	Perno per galoppino
20	PZ	S3400017ZZZ	Cuscinetto 6004 2RS NTN SKF
21	PZ	S340006892Z	Anello arresto per albero 20 brunito
22	PZ	S340044592Z	Anello arresto per foro 42 brunito
23	PZ	S340028393Z	Dado autobloccante M8 basso zincato
24	PZ	S340065593Z	Rondella tripla per vite M8 zincata
25	PZ	S470405200A	Puleggia doppia ass. SM11-48
26	PZ	S4503371ZZZ	Puleggia di rinvio SM11
27	PZ	S3400193ZZZ	Cuscinetto 6000 2RS
28	PZ	S3400095A	Cuscinetto 6203 2RS
29	PZ	S330596292Z	Perno per puleggia rinvio
30	PZ	S340018792Z	Anello arresto 10 DIN 471 brunito
31	PZ	S340002693Z	Vite TE M6X16 zincata
32	PZ	S340003393Z	Rondella tripla per vite M6 zincata
33	PZ	S3402679ZZZ	Cinghia dentata 240L075
34	PZ	S3401009ZZZ	Cinghia trascinamento SM11 75X2956 +-3,5
35	PZ	S470405300A	Puleggia folle ass. SM11-48
36	PZ	S4601730ZZZ	Puleggia folle comp.
37	PZ	S330596492B	Perno peleggia folle brunito SM
38	PZ	S340010492Z	Anello arresto per albero /25 brunito
39	PZ	S320428047Z	Piastra tendicin. motorizz. SM
40	PZ	S340059693Z	Vite TE M10X25 zincata
41	PZ	S340107693Z	Rondella tripla per vite M10 zincata
42	PZ	S3311650ZZZ	Blocchetto per motorizz. F144
43	PZ	S340016093Z	Vite TCEI M6X20 zincata
44	PZ	S331163893Z	Vite spec. Per tensionamento F144
45	PZ	S3101491ZZZ	Distanziale per motori SM/XL/3M
46	PZ	S340005593Z	Vite TSVEI M5X20 zincata
47	PZ	S350050693Z	Rondella fissaggio motori

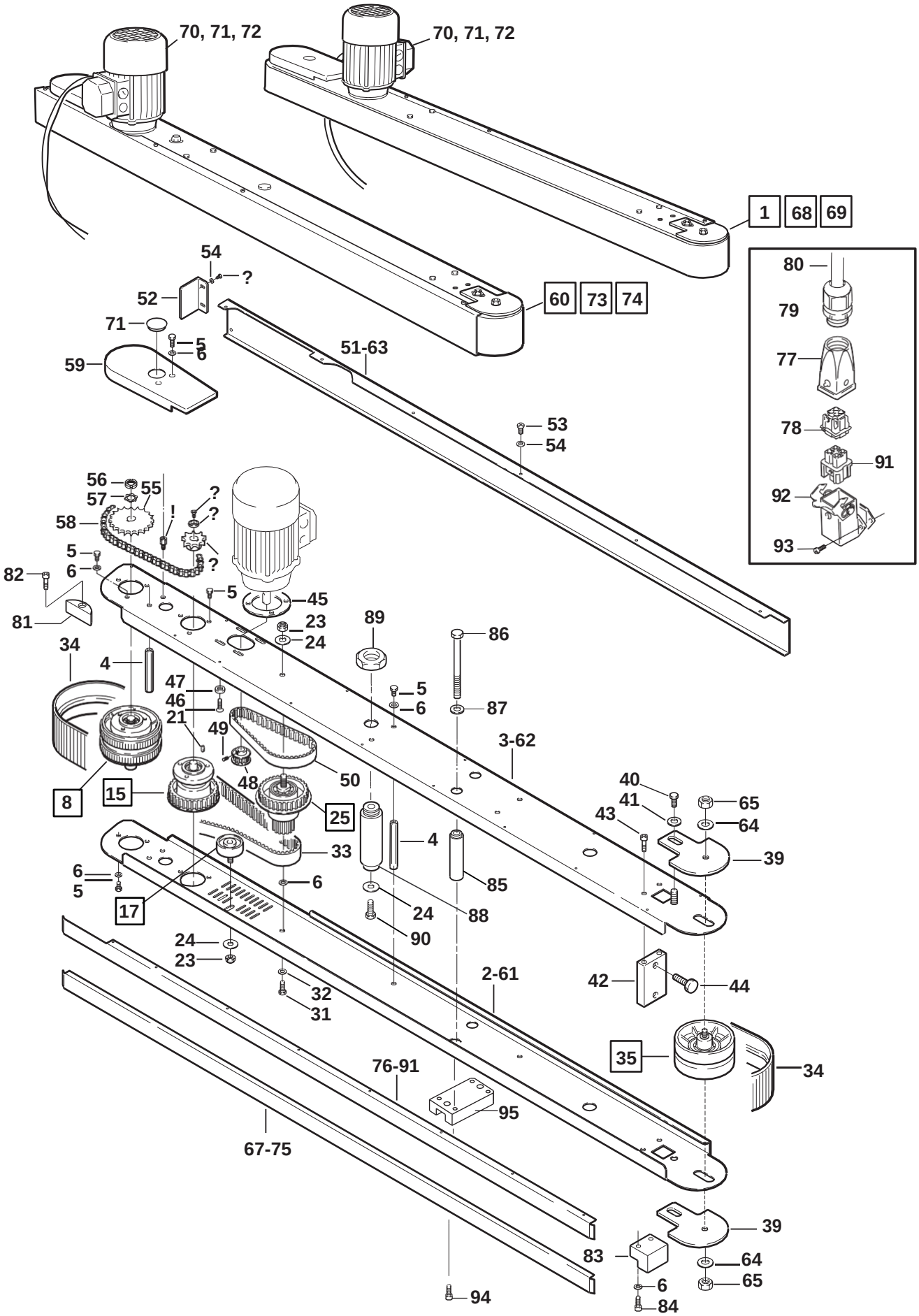
70, 71, 72
70, 71, 72
1
68
69
54
?
52
71
5
6
59
60
73
74
51-63
53
54
80
79
77
78
91
92
93
56
55
57
58
?
?
?
!
5
6
82
81
5
45
23
24
89
86
34
4
47
46
21
49
5
6
87
3-62
48
50
8
15
25
40
41
43
65
64
39
33
4
6
5
17
6
85
24
88
90
24
23
2-61
42
44
32
31
35
34
76-91
95
67-75
39
83
64
6
65
84
94

Figure *Figura*	Figure description *Descrizione figura*	Product *Prodotto*	Product description *Descrizione Prodotto*
15396	**Gruppo motorizzazioni**	**SM44-HS**	**Nastratrice**

48	PZ	S330962392Z	(C) Puleggia dentata 20XL050 brunita
49	PZ	S340038892Z	Grano EIPP M5X6 brunita
50	PZ	S3401593ZZZ	Cinghia dentata 160XL050
51	PZ	S4510004340A	Carter motorizz. dx c/inserti
52	PZ	S321628440A	Protezione pos. motorizzazioni SM11-S
53	PZ	S340037193Z	Vite TE M5X12 zincata
54	PZ	S340006193Z	Rondella piana per vite M5 zincata
55	PZ	S330655192Z	Pignone P=3/8" Z=28 SM brunito
56	PZ	S3400094ZZZ	Ghiera KM2
57	PZ	S3400913ZZZ	Rosette di sicurezza MB2
58	PZ	S3401851ZZZ	Cat. ring. chiuso 3/8" 52 Passi comp. giun.
59	PZ	S310068905Z	Carter catena
60	PZ	SBA0009046	Motorizz. sx 220/240-380/415V 50HZ SM44
61	PZ	S4510005547A	Guida inf. sx motorizz. c/inserti
62	PZ	S4510005347A	Guida sup. sx motorizz. c/inserti
63	PZ	S4510004440A	Carter motorizz. sx c/inserti
64	PZ	S340012393Z	Rondella piana per vite M8 zincata
65	PZ	S340000393Z	Dado M8 zincato
66	PZ	S3210018300A	Scivolo superiore dx motorizz.
67	PZ	S3210018200A	Scivolo inferiore motorizzazioni
68	PZ		
69	PZ		
70	PZ	S3803441ZZZ	MOT H63A4 220V/240V 380/415V 50H 0.13KW
71	PZ	SCA0000213	Tappo in plastica serie "Heyco"
72	PZ		
73	PZ		
74	PZ		
75	PZ		
76	PZ	S3210018400A	Scivolo superiore sx motorizzazioni
77	PZ	S3801458ZZZ	Custodia vol. uscita verti. PG11 105121
78	PZ	S3801455ZZZ	Inserto maschio 4 POLI 3P+T
79	PZ	S3802139ZZZ	Bocchettone skintop ST11
80	PZ	SCC0000518	Cavo OLFLEX-CLASSIC 400 P 4G1.5 MMQ
81	PZ	SBC0003252	Tendicinghia set aumento velocità
82	PZ	S340014193Z	Vite TCEI M5X25 zincata
83	PZ	S3110001100A	Pattino scorrimento motorizzazioni SM44
84	PZ	S340002093Z	Vite TCEI M6X30 zincata
85	PZ	S3310004693A	Distanziale fissaggio motorizzazioni
86	PZ	S340206393Z	Vite TE M10X110
87	PZ	S330039593Z	Rondella /10,5/26X4 zincata
88	PZ	S330748593Z	Cannotto filettato SM44/12RF
89	PZ	S331121093Z	Dado spec. fil. /22X1,5 H=8 SM44/SM44-PLC/
90	PZ	S340032493Z	Vite TE M8X16 zincata
91	PZ	S3801456ZZZ	Inserto femmina 3P+T
92	PZ	S3801459ZZZ	Custodia pannello con uscita lat. 104235
93	PZ	S345001193Z	Vite TCBRC M3X10 zincata
94	PZ	SBC0016032T	Blocchetto fissaggio motorizz. SM44HS
95	PZ	S340001593Z	Vite TCEI M6X25 zincata

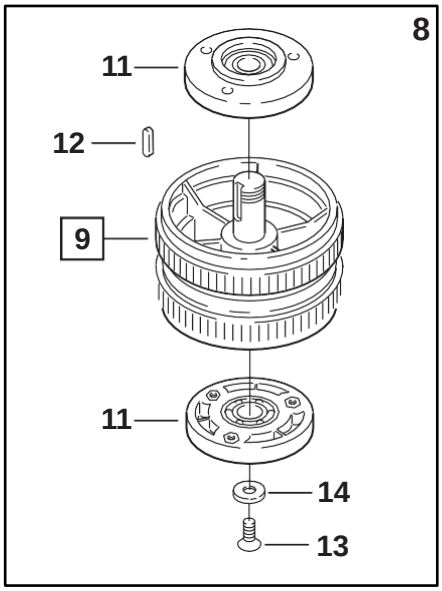
8
11
12
9
11
14
13

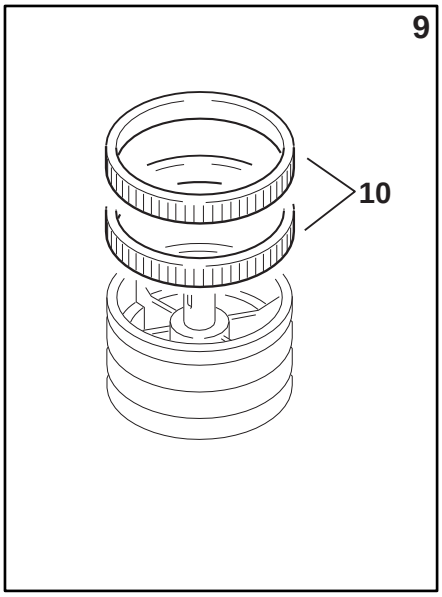
9
10

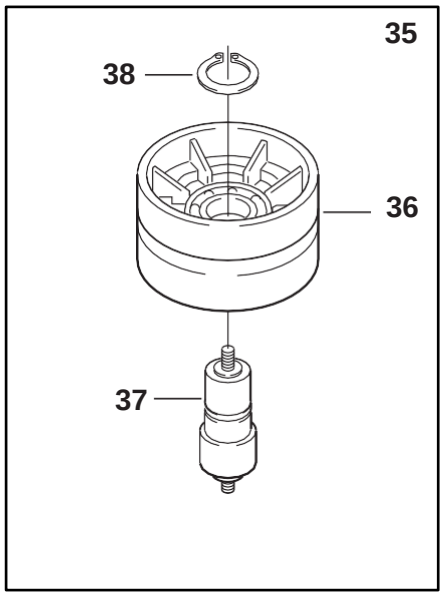
35
38
36
37

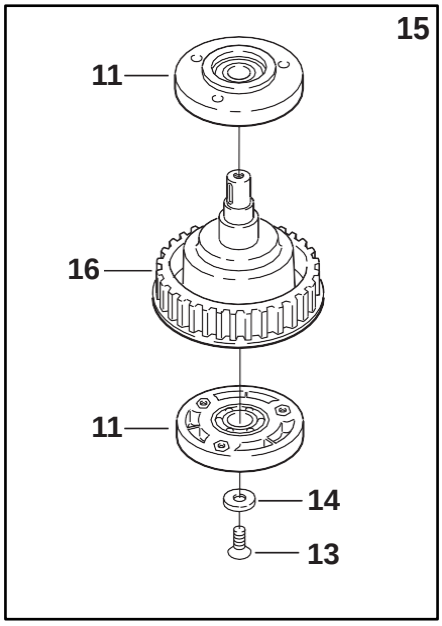
15
11
16
11
14
13

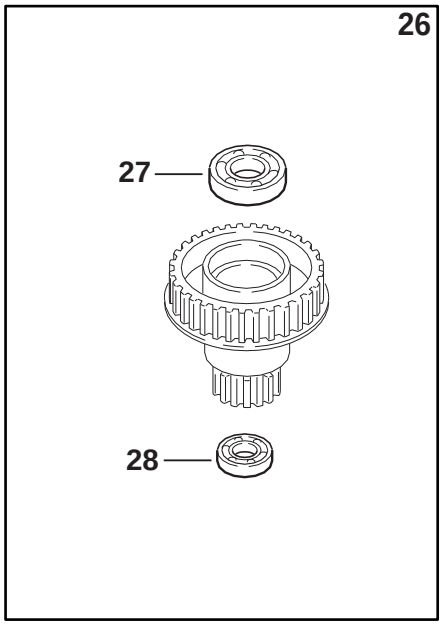
26
27
28

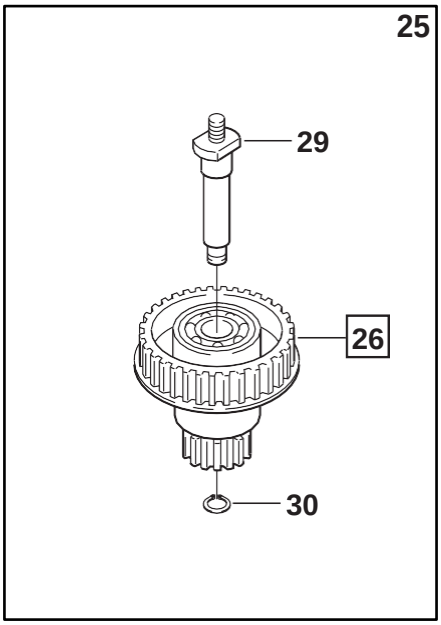
25
29
26
30

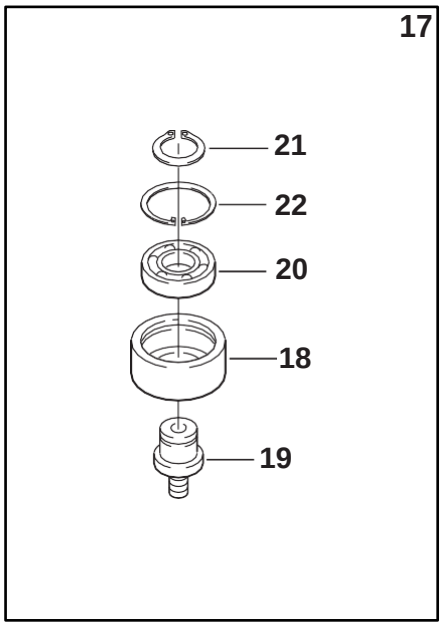
17
21
22
20
18
19

Figure *Figura*	Figure description *Descrizione figura*	Product *Prodotto*	Product description *Descrizione Prodotto*
15397	**Gr. cassetta imp. pneum.**	**SM44-HS**	**Nastratrice**

Posizione	Unità mis.	Codice SIAT	Definizione
1	PZ	S3210011047A	Staffa fissaggio cassetta
2	PZ	S340065593Z	Rondella tripla per vite M8 zincata
3	PZ	S340028093Z	Vite TE M8X20 zincata
4	PZ	S3310003893A	Distanziale fissaggio cassetta
5	PZ	S340203293Z	Vite TCEI M8X12 zincata
6	PZ	S340012393Z	Rondella piana per vite M8 zincata
7	PZ	S4510003547A	Cassetta impianto pneum. c/inserti
8	PZ	S4510003647A	Sportello scatola imp. pneum. c/inserti
9	PZ	S3402920ZZZ	Serratura "SOUTHCO E5-2-015-111" WS3
10	PZ	S340215405Z	Gomma spugnaF144
11	PZ	S4510003447A	Piastrina fissaggio sportello c/inserti
12	PZ	S340398000A	Cer. -ELESA- CFA.65 CH-6 COD.422232 SM
13	PZ	S340057793Z	Vite TCEI M6X16 zincata
14	PZ	S3210010847A	Supporto regolatori di flusso
15	PZ	S340057793Z	Vite TCEI M6X16 zincata
16	PZ	S340017593Z	Rondella piana per vite M6 zincata
17	PZ	S3210011147A	Piastra chiusura cassetta imp. pneum.
18	PZ	S3210011447A	Piastra per guaina cassetta imp. pneum.
19	PZ	S340072093Z	Vite testa mezza tonda M5X12 croce zincata
20	PZ	S3010001000A	Etichetta adesiva box pneumatica

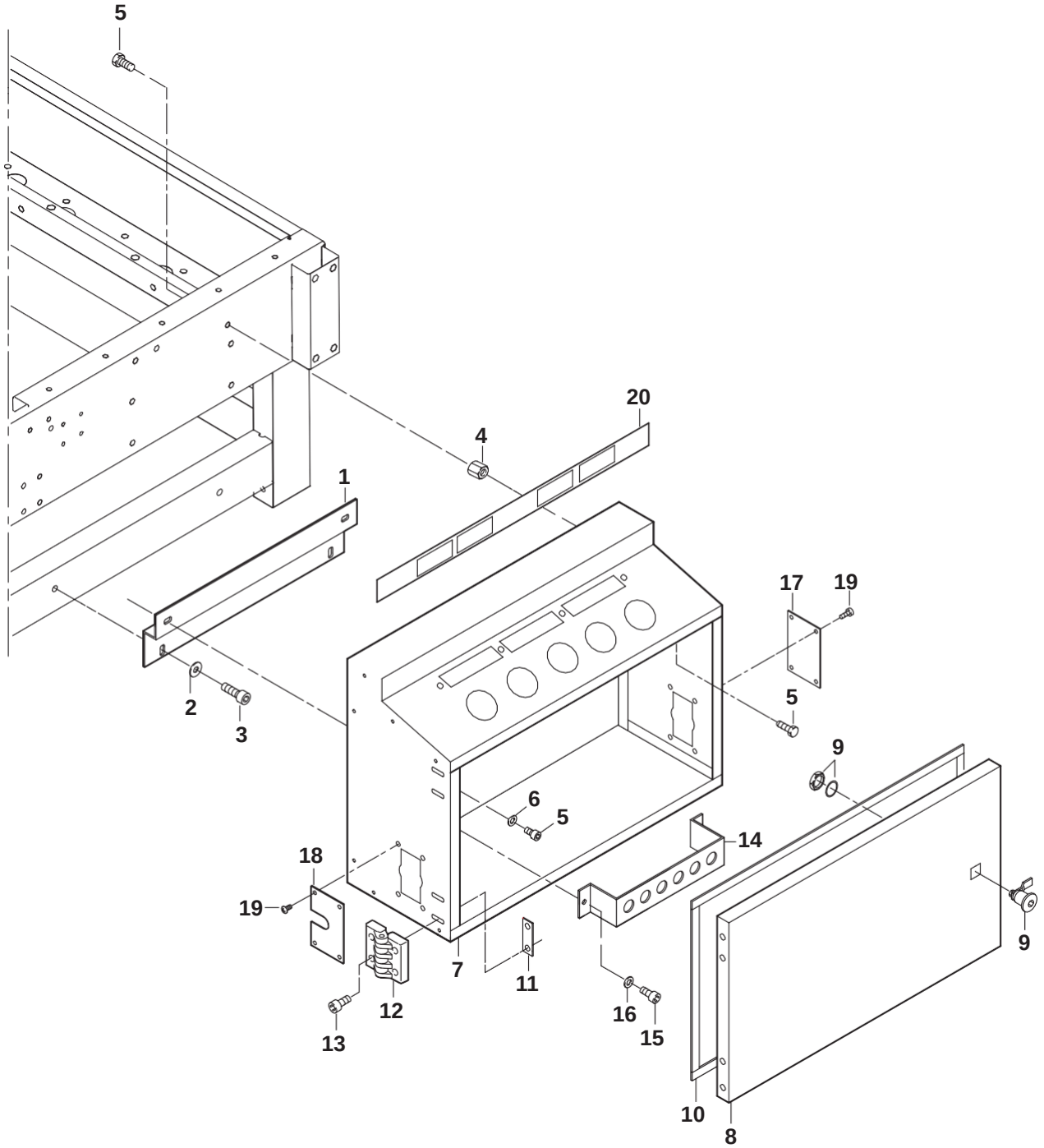
5
20
4
1
17
19
2
3
5
9
6
5
14
18
19
9
7
11
12
16
15
13
10
8

Figure *Figura*	Figure description *Descrizione figura*	Product *Prodotto*	Product description *Descrizione Prodotto*
15398	**Gruppo bancale**	**SM44-HS**	**Nastratrice**

Posizione	Unità mis.	Codice SIAT	Definizione
1	PZ	S4510005147A	Supporto piastra connettori c/inserti
2	PZ	S340057793Z	Vite TCEI M6X16 zincata
3	PZ	S340017593Z	Rondella piana per vite M6 zincata
4	PZ	S3210015147A	Carter protezione connettori
5	PZ	S340037193Z	Vite TE M5X12 zincata
6	PZ	S340006193Z	Rondella piana per vite M5 zincata
7	PZ	SCC0000738	Box M12 8 Vie 5p calotta estraibile
8	PZ	S340042093Z	Vite TCEI M4X16 zincata
9	PZ	S340004393Z	Rondella piana per vite M4 zincata
10	PZ	S3210009847A	Piastrina fotocellula/catadiottro
11	PZ	S3210009647A	Squadra fotocellula lato cassetta pneum
12	PZ	S340057793Z	Vite TCEI M6X16 zincata
13	PZ	S340003393Z	Rondella tripla per vite M6 zincata
14	PZ	S3802388ZZZ	Finecorsa di safety con staff. per 800af
15	PZ	S3802139ZZZ	Bocchettone skintop ST11
16	PZ	S340011293Z	Vite TCEI M5X16 zincata
17	PZ	S4710002700A	Rullo completo L=650 SM44
18	PZ	S4710002500A	Rullo assemblato L=650
19	PZ	SBC0008965T	Perno per rullo L=650 SM44S
20	PZ	S340102492Z	Anello arresto 12 SP 220
21	PZ	S4710002600A	Rullo completo L=220 SM44
22	PZ	S4710002400A	Rullo assemblato L=220
23	PZ	SBC0008964T	Perno per rullo L=220 SM44S
24	PZ	S3210009447A	Squadretta bloccaggio rulli
25	PZ	S3210010747A	Squadretta c/scarico bloccaggio rulli
26	PZ	S340072093Z	Vite testa mezza tonda M5X12 croce zincata
27	PZ	SCC0002058	Fotocellula M18 polarizzata 24VDC
28	PZ	S3802029ZZZ	Catarifrangente E39-R1 SM44
29	PZ	S340029193Z	Vite TCEI M3X10 zincata
30	PZ	S340055893Z	Rondella piana per vite M3 zincata
31	PZ	S340101493Z	Dado autobloccante M3 zincato

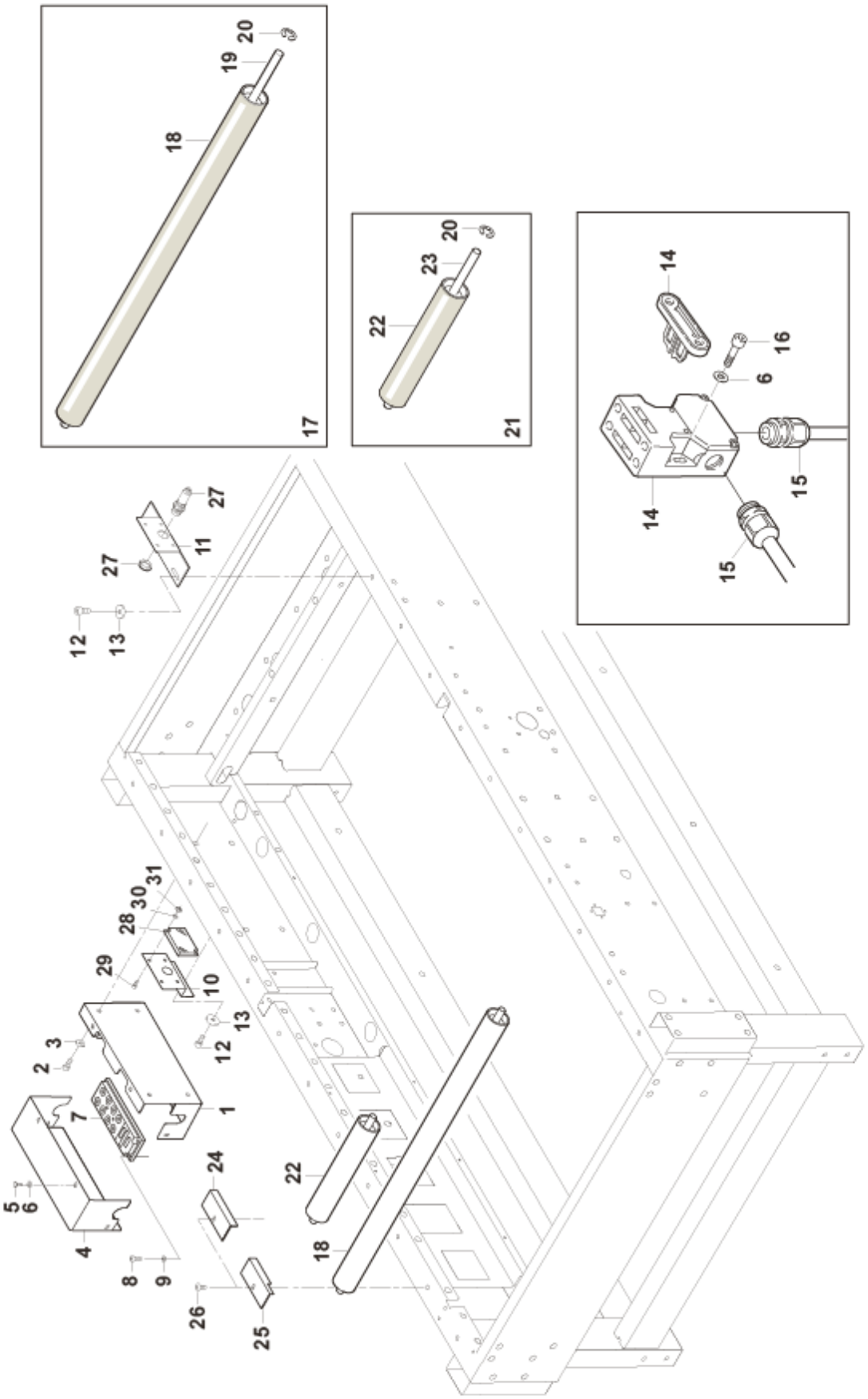

20
19
18
17
20
23
22
21
14
16
6
15
14
15
27
11
27
12
13
31
30
28
29
10
13
12
3
2
1
7
5
6
4
24
22
18
8
9
26
25

Figure *Figura*	Figure description *Descrizione figura*	Product *Prodotto*	Product description *Descrizione Prodotto*
15399	**Gruppo colonne-guide**	**SM44-HS**	**Nastratrice**

Posizione	Unità mis.	Codice SIAT	Definizione
1	PZ	SBC0016589V	Carter chiusura colonna sx SM44HS
2	PZ	S340017593Z	Rondella piana per vite M6 zincata
3	PZ	S340002693Z	Vite TE M6X16 zincata
4	PZ	SBA0009801	Carter protez.cavi cilindro c/insSM44HS
5	PZ	S340012393Z	Rondella piana per vite M8 zincata
6	PZ	S340364093Z	Vite TE M8X22 zincata
7	PZ	S340028393Z	Dado autobloccante M8 basso zincato
8	PZ	SBA0009451	Profilo lat. colonna fissa c/ins.SM44HS
9	PZ	S340028093Z	Vite TE M8X20 zincata
10	PZ	SBA0009450	Colonna fissa sx c/ins. SM44-HS
11	PZ	SBA0010374	Traversa sup. colonne saldata con ins.
12	PZ	SBA0009413V	Traversa inferiore colonna
13	PZ	S340001593Z	Vite TCEI M6X25 zincata
14	PZ	SCA0000771	Rotaia guida lineare MOD. HRS25-320LG
15	PZ	SBA0009452	Traversa sup. chiudifalda c/ins. SM44HS
16	PZ	S340058493Z	Vite TCEI M8X16 zincata
17	PZ	S340048693Z	Vite TCEI M8X25 zincata
18	PZ	S3310004000A	Blocchetto fissaggio traversa
19	PZ	SCA0000769	Pattino per guida lineare MOD.HRS25ASSG
20	PZ	SCA0001362	Rotaia guida lineare MOD. HRS25-1060LG
21	PZ	S340003093Z	Vite TSVEI M6X25 zincata
22	PZ	S330973893Z	Rondella speciale /6,5X20X4 zincata
23	PZ	S340000293Z	Dado M6 zincato
24	PZ	S340016093Z	Vite TCEI M6X20 zincata
25	PZ	S340292193Z	Vite testa mezza tonda croce M4X10
26	PZ	S4510003847A	Carter dx protezione cilindro c/inserti
27	PZ	S4510006547A	Colonna fissa dx c/rivetti
28	PZ	S340004393Z	Rondella piana per vite M4 zincata
29	PZ	S340017693Z	Vite TE M4X12 zincata
30	PZ	S3210012747A	Profilo fissaggio carter su bancale

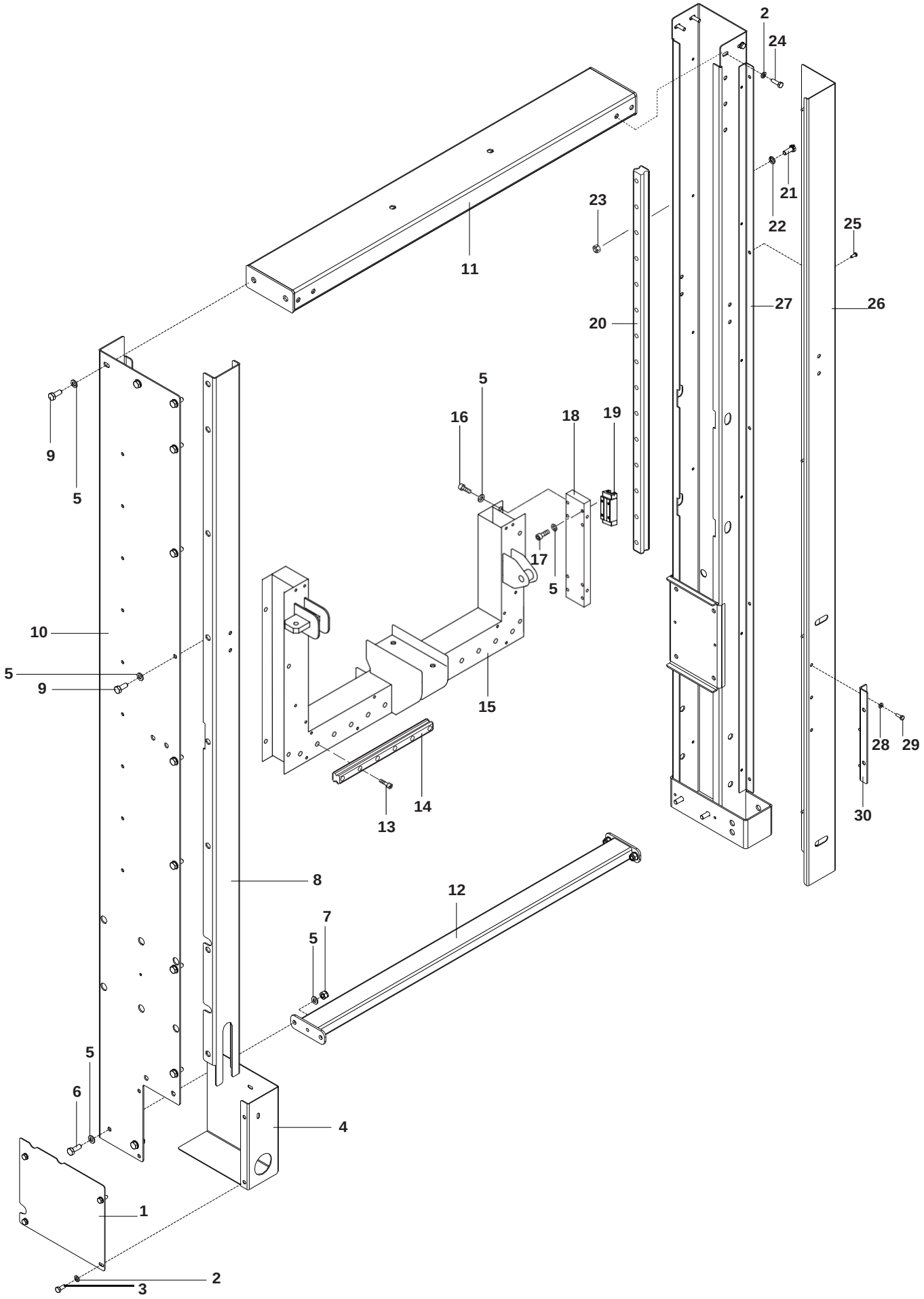

SM44-HS Giu. 2010 Fig. **15399**

Figure *Figura*	Figure description *Descrizione figura*	Product *Prodotto*	Product description *Descrizione Prodotto*
15400	**Gruppo bancale**	**SM44-HS**	**Nastratrice**

Posizione	Unità mis.	Codice SIAT	Definizione
1	PZ	S340028093Z	Vite TE M8X20 zincata
2	PZ	S340012393Z	Rondella piana per vite M8 zincata
3	PZ	S340028393Z	Dado autobloccante M8 basso zincato
4	PZ	S340094592Z	Anello di sicurezza 8 DIN 6799
5	PZ	S331079593Z	Perno attacco cil. /40 800rf/SM44 PLC
6	PZ	S3310010193A	Distanziale inferiore cilindri colonne
7	PZ	SBA0010436	Gr.cilin.sollevamento con motore compl.
8	PZ	SBA0010435	Gr.cilin.sollevamento senza motore comp
9	PZ	SBC0015180T	Distanziale attacco cilindro SM44HS
10	PZ	S340230292Z	Ranella di safety "S" /12 (Schnorr) F10
11	PZ	S340001893Z	Dado M12 zincato
12	PZ	S340073593Z	Dado M12 autobloccante
13	PZ	S340125893A	Dado autobloccante M16 zincata
14	PZ	S340142093Z	Rondella piana per vite M16 zincata
15	PZ	S340101693Z	Testa a snodo M12X1,25 zincata
16	PZ	S3310003992A	Perno sup. attacco cilindro
17	PZ	S340021993Z	Rondella piana per vite M10 zincata
18	PZ	S340043893Z	Dado autobloccante M10 basso
19	PZ	SCC0002042	Servomotore junma + freno 400W
20	PZ	S340010893Z	Vite TCEI M5X20 zincata
21	PZ	S340220392Z	Ranella di safety "S" (schnorr) /5 F144
22	PZ	SCB0000751	Kit assiale EAMM-A-D40-55A FESTO
23	PZ	SBC0015935T	Controflangia cilindro elettrico SM44HS
24	PZ	SCB0000753	Fiss. a piedini HNCE-40-AX FESTO
25	PZ	SCB0000752	Cilindro el. DNCE-40-600-BS-12,7"P-Q"
26	PZ	S380611400A	Finecorsa SME-8M-DS-24V-K-0,3-M8D
27	PZ	SCB0000745	Giunto flexo FK-M12x1,25 FESTO
28	PZ	SCB0000759	Cilindro a norme DNCB-40-600-PPV-A
29	PZ	S3800448ZZZ	Silenziatore 1/4"
30	PZ	S3802289ZZZ	Raccordo gomito 31990813
31	PZ	S380606700A	Flangia oscill. SNCB-40 AS24-560 pneum.

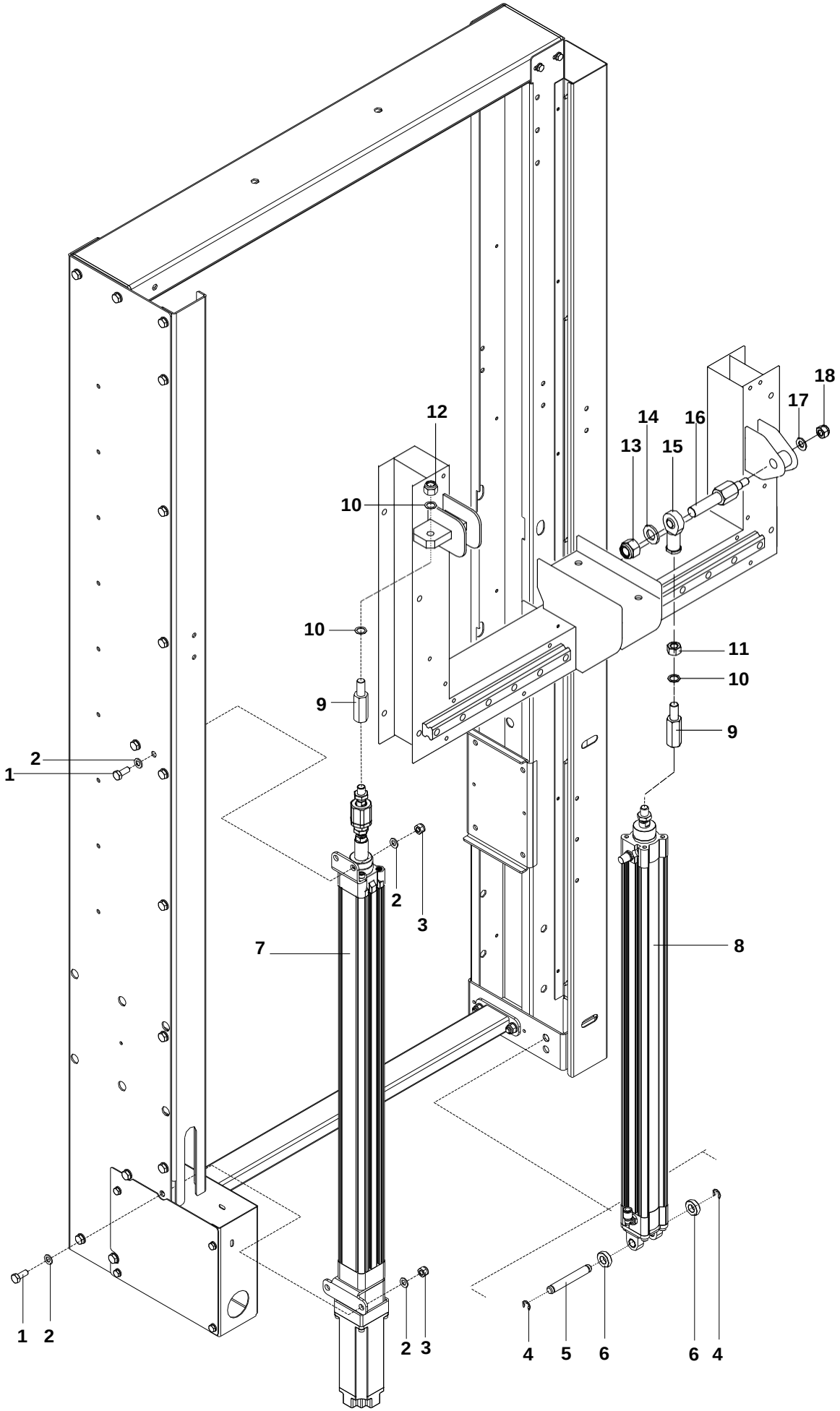

SM44-HS Giu. 2010 Fig. **15400/1**

Figure *Figura*	Figure description *Descrizione figura*	Product *Prodotto*	Product description *Descrizione Prodotto*
15400	**Gruppo bancale**	**SM44-HS**	**Nastratrice**

Posizione	Unità mis.	Codice SIAT	Definizione
1	PZ	S340028093Z	Vite TE M8X20 zincata
2	PZ	S340012393Z	Rondella piana per vite M8 zincata
3	PZ	S340028393Z	Dado autobloccante M8 basso zincato
4	PZ	S340094592Z	Anello di sicurezza 8 DIN 6799
5	PZ	S331079593Z	Perno attacco cil. /40 800rf/SM44 PLC
6	PZ	S3310010193A	Distanziale inferiore cilindri colonne
7	PZ	SBA0010436	Gr.cilin.sollevamento con motore compl.
8	PZ	SBA0010435	Gr.cilin.sollevamento senza motore comp
9	PZ	SBC0015180T	Distanziale attacco cilindro SM44HS
10	PZ	S340230292Z	Ranella di safety "S" /12 (Schnorr) F10
11	PZ	S340001893Z	Dado M12 zincato
12	PZ	S340073593Z	Dado M12 autobloccante
13	PZ	S340125893A	Dado autobloccante M16 zincata
14	PZ	S340142093Z	Rondella piana per vite M16 zincata
15	PZ	S340101693Z	Testa a snodo M12X1,25 zincata
16	PZ	S3310003992A	Perno sup. attacco cilindro
17	PZ	S340021993Z	Rondella piana per vite M10 zincata
18	PZ	S340043893Z	Dado autobloccante M10 basso
19	PZ	SCC0002042	Servomotore junma + freno 400W
20	PZ	S340010893Z	Vite TCEI M5X20 zincata
21	PZ	S340220392Z	Ranella di safety "S" (schnorr) /5 F144
22	PZ	SCB0000751	Kit assiale EAMM-A-D40-55A FESTO
23	PZ	SBC0015935T	Controflangia cilindro elettrico SM44HS
24	PZ	SCB0000753	Fiss. a piedini HNCE-40-AX FESTO
25	PZ	SCB0000752	Cilindro el. DNCE-40-600-BS-12,7"P-Q"
26	PZ	S380611400A	Finecorsa SME-8M-DS-24V-K-0,3-M8D
27	PZ	SCB0000745	Giunto flexo FK-M12x1,25 FESTO
28	PZ	SCB0000759	Cilindro a norme DNCB-40-600-PPV-A
29	PZ	S3800448ZZZ	Silenziatore 1/4"
30	PZ	S3802289ZZZ	Raccordo gomito 31990813
31	PZ	S380606700A	Flangia oscill. SNCB-40 AS24-560 pneum.

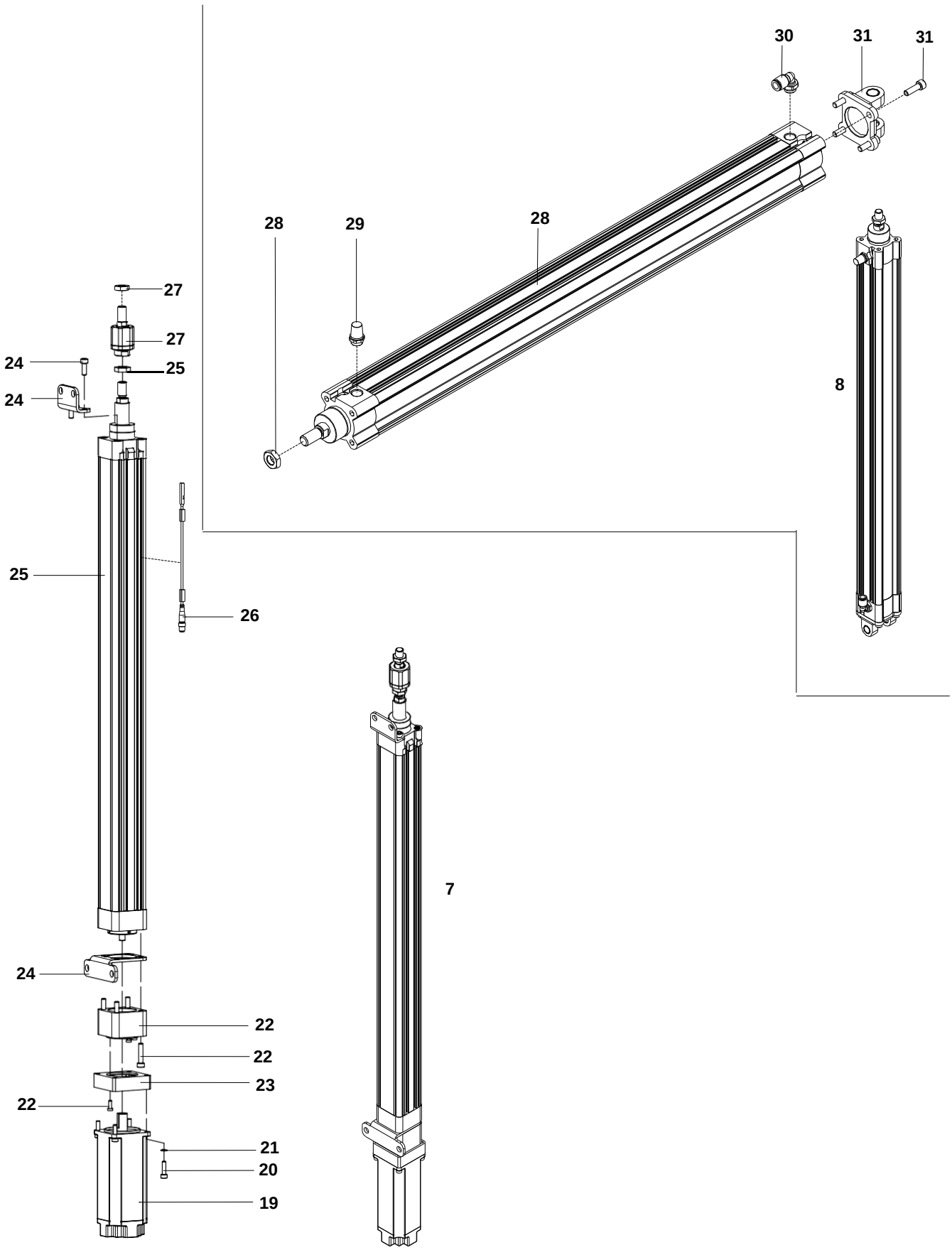

SM44-HS Giu. 2010 Fig. **15400/2**